HONDA

# CBR1000RR

CBR1000RR4
CBR1000RR5
CBR1000RR6
CBR1000RR7

## PARTS CATALOGUE

# 4

13MEL404

© Honda Motor Co., Ltd. 2006

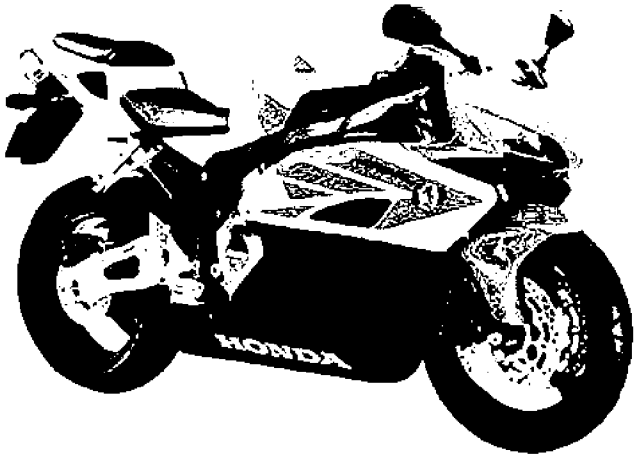


[CBR1000RR4]

FOREWORD INDEX 1

ENGINE GROUP 2

FRAME GROUP 3

PART NUMBER INDEX 4

PART NAME INDEX 5

## Instruction for use of parts catalogue

- This parts catalogue has been created as of September 10, 2006.
  - Since this date, the sales practice for repair parts may have been changed or the parts may have been eliminated (listed for those not for sale).
  - The modified information is reflected on the latest Electronic Parts Catalogue (EPC).
    Also, refer to the parts catalogue news for any change.
  - See the parts catalogue news for any revision that is made after September 10, 2006.
- Always specify the part number when ordering a part.
  - Check the model, type, serial numbers, color, maker, and the size as needed before ordering a part.
  - Note that the illustrations (part drawings) can differ from the actual parts in shape.
    They are given just to help you to refer to the parts.
- When modifications or additions to this parts catalogue are made, a revised edition will be issued at an appropriate time, with successively progressing revision numbers on the cover. We recommend obtaining such revisions in order to keep your parts catalogue up-to-date at all times. To check whether a parts catalogue revision has been issued, please contact your Honda distributor.

Initial version issue date
February 01, 2004
Honda Motor Co., Ltd.

## CONTENTS


| | Page | Address No. | |
|---|---|---|---|
| Instruction for use of parts catalogue | 1 | B 1 | 1 |
| How to refer to the part information | 2 | B 2 | |
| Part catalogue structure | 3 | B 3 | |
| When the parts were revised | 4 | B 4 | |
| Abbreviations used in the parts catalogue | 4 | B 4 | |
| Part block and serial number check | 5 | B 5 | |
| Color label attachment position check | 5 | B 5 | |
| Models, parts catalogue codes and applicable serial numbers | 6 | B 6 | |
| Color label | 8 | B 8 | |
| Color chart | 9 | B 9 | |
| Fuel hose, general purpose hoses and vinyl hose | 31 | C15 | |
| FLAT RATE SERVICE TIME | 35 | D 3 | |
| Illustrated index | 40 | D 8 | |
| ENGINE GROUP | 51 | F 1 | 2 |
| FRAME GROUP | 88 | I 1 | 3 |
| PART NO. INDEX | 213 | 2-D 1 | 4 |
| PART NAME INDEX | 223 | 2-E 1 | 5 |

# How to refer to the part information

## Ⓐ Reference with "Illustrated index"

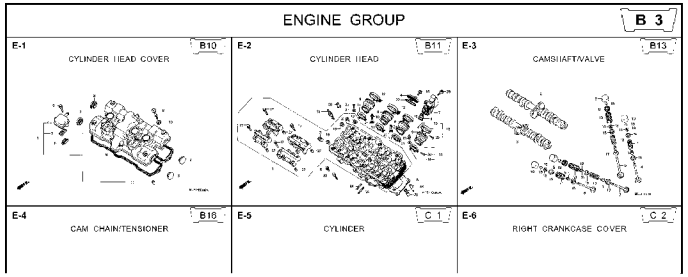


## Ⓑ Reference with "Part number index"

PART NO. INDEX

| Part Number | Address | Page | Ref. | Part Number | Address | Page | Ref. | F |
|---|---|---|---|---|---|---|---|---|
| 04000 | | | | 13323-MY9-751 | C12 | 28 | 10 | 1492 |
| | | | | 13324-MY9-751 | C12 | 28 | 10 | 1495 |
| 04911-MCE-000 | C10 | 26 | 1 | 13325-MY9-751 | C12 | 28 | 10 | 1493 |
| | | | | 13327-MY9-751 | C12 | 28 | 10 | 1493 |
| 06000 | | | | | | | | 1493 |
| | | | | 14000 | | | | 1493 |
| | | | | | | | | 1493 |
| 06405-MY5-P00 | F13 | 67 | 3 | | | | | 1493 |
| 06405-MY5-P10 | F13 | 67 | 3 | 14100-MCE-000 | B13 | 13 | 2 | 1493 |
| 06410-MY9-860 | F2 | 56 | 1 | 14200-MCE-000 | B13 | 13 | 3 | 1493 |
| 06435-MCE-006 | F1 | 55 | 1 | 14321-MCE-000 | B16 | 16 | 2 | 1493 |
| 06451-166-405 | E13 | 51 | 2 | 14401-MCE-003 | B16 | 16 | 3 | 1493 |
| 06451-443-405 | F1 | 55 | 2 | 14510-MBE-000 | B16 | 16 | 4 | 1494 |
| 06451-MA7-405 | E13 | 51 | 1 | 14520-MY9-691 | B16 | 16 | 5 | 1494 |
| 06455-MCE-006 | E13 | 51 | 3 | 14524-MY9-690 | B16 | 16 | 6 | 1494 |
| | | | | 14546-MCE-000 | B16 | 16 | 7 | 1494 |
| 11000 | | | | 14620-MY9-691 | B16 | 16 | 8 | 1494 |
| | | | | 14711-MCE-000 | B13 | 13 | 4 | 1494 |
| 11210-MCE-000 | C9 | 25 | 1 | 14712-MCE-000 | B13 | 13 | 5 | 1494 |
| 11330-MCE-305 | C2 | 18 | 1 | 14721-MCE-000 | B13 | 13 | 6 | 1494 |
| 11335-KT8-000 | C6 | 22 | 1 | 14722-MCE-000 | B13 | 13 | 7 | 1494 |
| 11335-MCE-000 | C2 | 18 | 2 | 14730-MCE-000 | B13 | 13 | 8 | 1494 |
| 11360-MCE-000 | C7 | 23 | 1 | 14731-MCE-000 | B13 | 13 | 9 | 1495 |
| 11365-MCE-000 | C7 | 23 | 2 | 14731-MY9-751 | B13 | 13 | 10 | 1495 |
| 11396-MY9-000 | C2 | 18 | 3 | 14751-KY2-000 | B13 | 13 | 11 | 1495 |
| 11631-MCE-000 | C5 | 21 | 1 | 14751-MCE-000 | B13 | 13 | 12 | 1495 |
| 11691-MY9-000 | C5 | 21 | 2 | 14761-MCE-000 | B13 | 13 | 13 | 1495 |

## Ⓒ Reference with "Part name index"

PART NAME INDEX

| Part name | Address | Page | Ref. | Pa |
|---|---|---|---|---|
| [ A ] | | | | BOLT ,CHANG |
| | | | | BOLT ,CLUTC H |
| ADJUSTER ,CHAIN | F13 | 67 | 5 | BOLT ,CONNECT |
| ARM COMP. ,GEA R CHANGE | F10 | 64 | 3 | BOLT ,DISK,6 |
| ARM ,L.MAIN STEP | F11 | 65 | 8 | BOLT ,DISK,8 |
| ARM ,L.PILLI@ STEP | F11 | 65 | 12 | BOLT ,DRAIN |
| ARM ,R.MAIN STEP | F11 | 65 | 5 | BOLT ,FLANG E |
| ARM ,R.PILLI@ STEP | F11 | 65 | 11 | BOLT ,FLANGE |
| AUT O COC K ASSY.,FUEL | F4 | 58 | 2 | BOLT ,FLANGE |
| AXLE ,FR.WHEEL | E14 | 52 | 3 | BOLT ,FLANGE |
| AXLE ,RR.WHEEL | F2 | 56 | 3 | BOLT ,FLANGE |
| | | | | BOLT ,FLANGE |
| [ B ] | | | | BOLT ,FLANGE |
| | | | | BOLT ,FLANGE |
| BAG ,AIR PRESSUR E GAUGE | 67 | 77 | 4 | |
| BAG ,SERVICE BOOK | 67 | 77 | 1 | |
| BAG ,TOOL | 67 | 77 | 3 | BOLT ,FLANGE |
| BALL ,STEEL, | F11 | 65 | 20 | |
| BAN D A,INSULATOR | B11 | 11 | 11 | |
| BAN D B,INSULATOR | B11 | 11 | 12 | |
| BAND ,AIR CLEANE R CONNECTING TUBE | F8 | 62 | 22 | BOLT ,FLANGE<br>BOLT ,FLANGE |
| BAND ,U-LOCK | F16 | 70 | 3 | |
| BAND ,WIRE | C10 | 26 | 14 | |
| | E5 | 43 | 21 | |
| | E4 | 74 | 18 | |

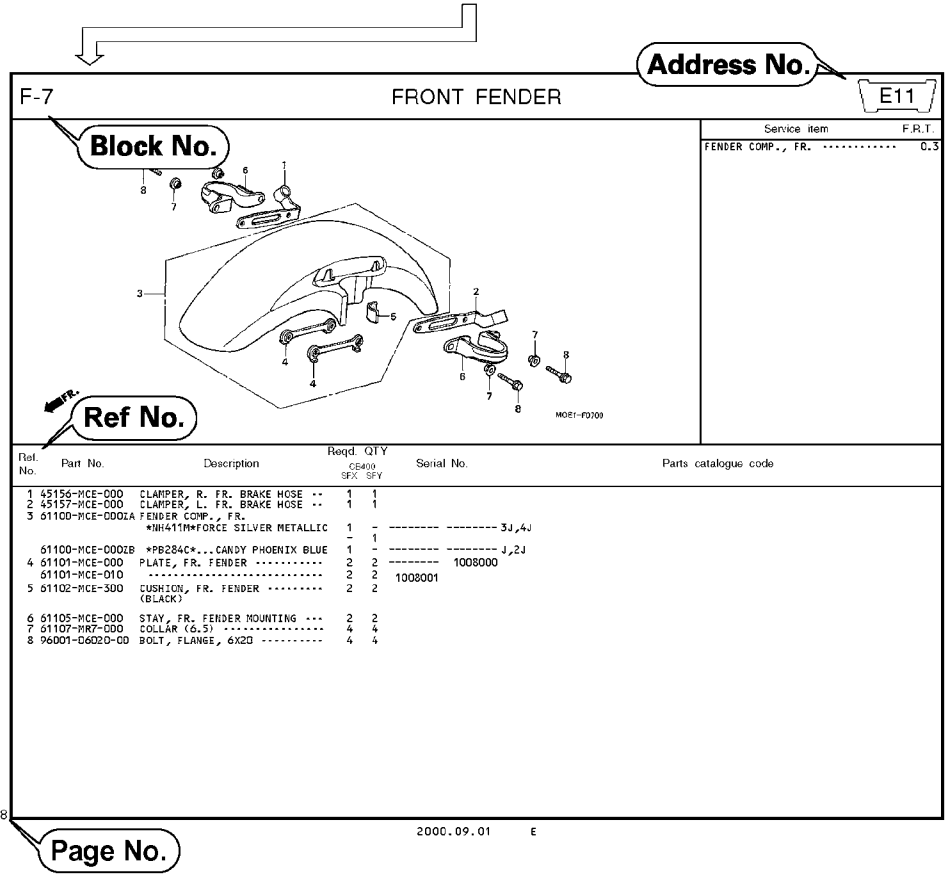

## Part catalogue structure

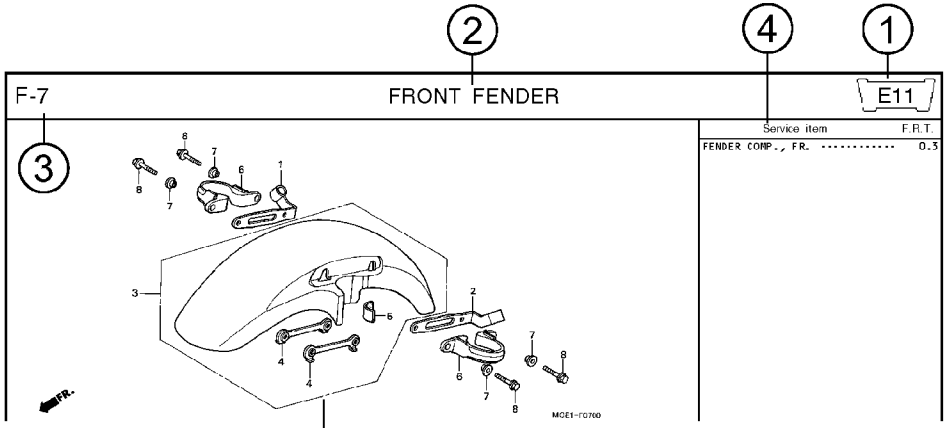


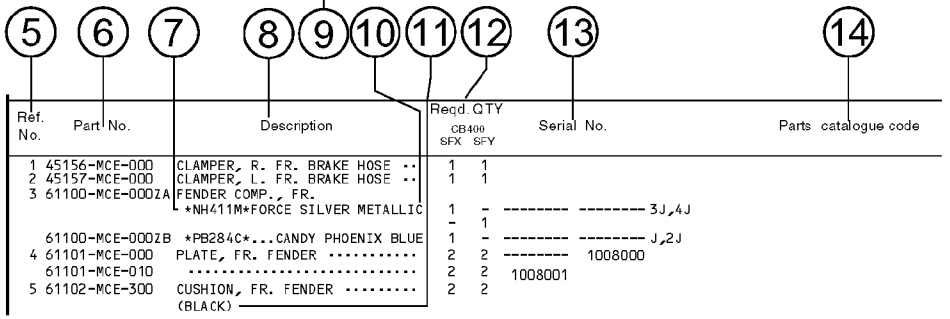


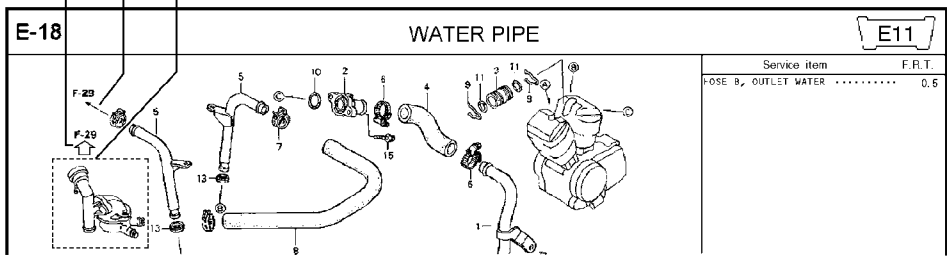


① Address number
- Address No. is provided (in place of the page No.) to help you refer to the part with the part No. or part name.

② Block title ③ Block number

④ Service item/Flat rate time

⑤ Reference number
- Title number marked with the parenthesis or parentheses indicates that it continues from the previous page.

⑥ Part number ⑦ Honda color code

⑧ Description

⑨ Assemblies
- Sections framed with broken lines in the exploded view drawings are available as complete assemblies. (Their individual parts can also be obtained.)

⑩ Color description

⑪ Note
- Notes are shown with the parentheses in the part name column.

⑫ Required quantity
- Reqd. QTY shown in the parenthesis or parentheses indicates the optional part.
- Reqd. QTY marked with "N" indicates the optional part that should be selected as needed.
- Reqd. QTY indicates the number of the part used in the block.

⑬ Serial number

⑭ Parts catalogue code
- When the parts catalogue code column is blank, it indicates that the part is applicable to all codes.

⑮
- Parts enclosed within a dotted line are covered in a different block.

⑯
- A hollow arrow indicates the block No. for the parts enclosed within a dotted line .

⑰
- A solid arrow indicates the block No. the part in question is connected to.

## When the parts were revised

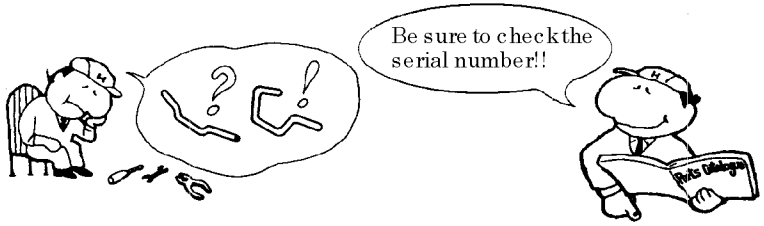


| Ref. No. | Part No. | Description | Reqd. QTY CB400 SFX | Reqd. QTY CB400 SFY | Serial No. |
|---|---|---|---|---|---|
| 1 | 45156-MCE-000 | CLAMPER, R. FR. BRAKE HOSE ·· | 1 | 1 | |
| 2 | 45157-MCE-000 | CLAMPER, L. FR. BRAKE HOSE ·· | 1 | 1 | |
| 3 | 61100-MCE-000ZA | FENDER COMP., FR. *NH411M*FORCE SILVER METALLIC | 1 | - | -------- --------3J,4J |
| | | | - | 1 | |
| | 61100-MCE-000ZB | *PB284C*...CANDY PHOENIX BLUE | 1 | - | -------- --------J,2J |
| 4 | 61101-MCE-000 | PLATE, FR. FENDER (###)····· | 2 | 2 | -------- 1008000 |
| | 61101-MCE-010 | ····· | 2 | 2 | 1008001 |
| 5 | 61102-MCE-300 | CUSHION, FR. FENDER ····· (BLACK) | 2 | 2 | |
| 6 | 61105-MCE-000 | STAY, FR. FENDER MOUNTING ··· | 2 | 2 | |
| 7 | 61107-MR7-000 | COLLAR (6.5) ····· | 4 | 4 | |
| 8 | 96001-06020-00 | BOLT, FLANGE, 6X20 ····· | 4 | 4 | |

The number has been used from the initial model without revision.

When shown at the left side, it is applicable to the models of No.1008001 and the subsequent numbers.

When shown at the right side, it is applicable to the models up to No.1008000.

• The parts listed with "###" at the end of the parts name have limited supply period (parts not for sale).

## Abbreviations used in the parts catalogue

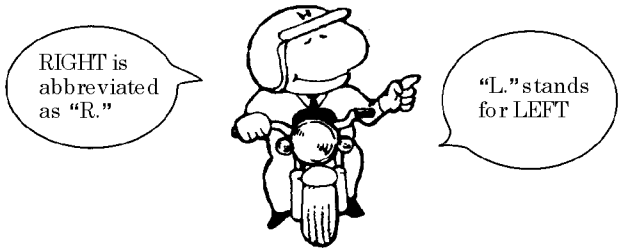


* "L" or "R." in the description of a part stands for the LEFT hand side or the RIGHT hand side. Determine the left or right as if you were in the motorcycle seat.

• The following abbreviations are used in this parts catalogue.

A ..... Ampere
ABS ..... Anti-lock brake system
A.C. ..... Alternating current
A.M. ..... Attaching mark
ASSY. .... Assembly
C.D.I. ..... Capacitive discharge ignition
COMP. ... Complete
D.C. ..... Direct current
EX. ..... Exhaust
FR. ..... Front
G ..... Gram
HEX. ..... Hexagonal
IN. ..... Inlet
KPH ..... Kilometers per hour
L ..... Left
L(100L) .Link (100 Links)
L.E.D. .....Light emitted diode
MM .....Millimeter
MPH .....Miles per hour
R. .....Right
RR. .....Rear
STD. .....Standard
T (22T) ...Tooth (22 Teeth)
TCS .....Traction control system
T.M. .....Transcript mark
V .....Volt
W .....Watt
WL .....With labelling
WOL .....Without labelling

## Part block and serial number check

| | | | |
|---|---|---|---|
| Part block | Engine parts E-1~ | Throttle body parts E-18~ | Frame parts F-1~ |
| Required serial number | Engine serial number | Throttle body serial number | Frame serial number |
| Check point | ① | ② | ③ |

## Color label attachment position check

| | |
|---|---|
| Colored parts | |
| Color label | |
| ④ | |

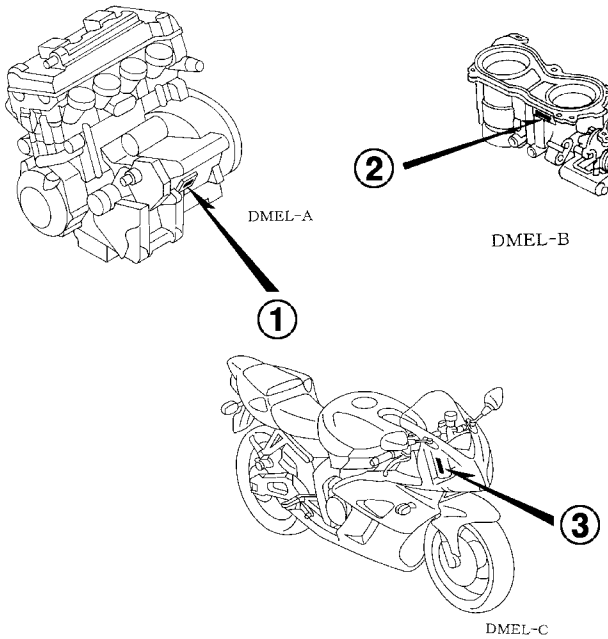


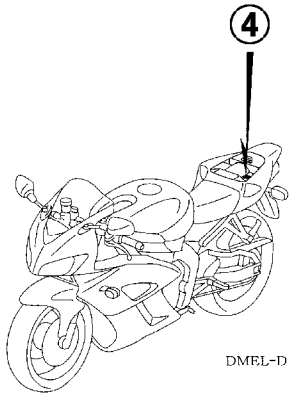

## Models, parts catalogue codes and applicable serial numbers

Models, parts catalogue codes and applicable serial Nos. given in this parts catalogue can be identified as follows.
Parts with parts catalogue codes are exclusive for models destined for countries designated.
If no area codes are listed, parts are for common use.

| Model | Area code | Type | Applicable engine serial No. | Applicable frame serial No. | Applicable throttle body identification No. |
|---|---|---|---|---|---|
| CBR1000RR4 | BR | Brazil | SC57E-2000001~2099999 | JH2SC579*4M000001~4M099999 | GQA0A A |
| | E | England | SC57E-2000001~2099999 | JH2SC57A*4M000001~4M099999 | |
| | ED | European direct sales | SC57E-2000001~2099999 | JH2SC57A*4M000001~4M099999 | |
| | F | France | SC57E-2000001~2099999 | JH2SC57C*4M000001~4M099999 | |
| | G | Germany | SC57E-2000001~2099999 | JH2SC57B*4M000001~4M099999 | |
| | KO | Korea | SC57E-2000001~2099999 | JH2SC579*4M000001~4M099999 | |
| | MX | Mexico | SC57E-2000001~2099999 | JH2SC579*4M000001~4M099999 | |
| | U | Australia | SC57E-2000001~2099999 | JH2SC57U*4M000001~4M099999 | |
| CBR1000RR5 | BR | Brazil | SC57E-2100001~2199999 | JH2SC579*5M100001~5M199999 | GQA0A A |
| | E | England | SC57E-2100001~2199999 | JH2SC57A*5M100001~5M199999 | |
| | ED | European direct sales | SC57E-2100001~2199999 | JH2SC57A*5M100001~5M199999 | |
| | EK | Ireland | SC57E-2100001~2199999 | JH2SC57A*5M100001~5M199999 | |
| | F | France | SC57E-2100001~2199999 | JH2SC57C*5M100001~5M199999 | |
| | G | Germany | SC57E-2100001~2199999 | JH2SC57B*5M100001~5M199999 | |
| | KO | Korea | SC57E-2100001~2199999 | JH2SC579*5M100001~5M199999 | |
| | MX | Mexico | SC57E-2100001~2199999 | JH2SC579*5M100001~5M199999 | |
| | U | Australia | SC57E-2100001~2199999 | JH2SC57U*5M100001~5M199999 | |
| | 2ED | European direct sales | SC57E-2100001~2199999 | JH2SC57A*5M100001~5M199999 | |
| | 2F | France | SC57E-2100001~2199999 | JH2SC57C*5M100001~5M199999 | |
| | 2G | Germany | SC57E-2100001~2199999 | JH2SC57B*5M100001~5M199999 | |
| | 2KO | Korea | SC57E-2100001~2199999 | JH2SC579*5M100001~5M199999 | |
| | 2U | Australia | SC57E-2100001~2199999 | JH2SC57U*5M100001~5M199999 | |
| | 3E | England | SC57E-2100001~2199999 | JH2SC57A*5M100001~5M199999 | |
| | 4EK | Ireland | SC57E-2100001~2199999 | JH2SC57A*5M100001~5M199999 | |

| Model | Area code | Type | Applicable engine serial No. | Applicable frame serial No. | Applicable throttle body identification No. |
|---|---|---|---|---|---|
| CBR1000RR6 | BR | Brazil | SC57E-2200001~2299999 | JH2SC579*6M200001~6M299999 | GQA1A A |
| | E | England | SC57E-2200001~2299999 | JH2SC57A*6M200001~6M299999 | |
| | ED | European direct sales | SC57E-2200001~2299999 | JH2SC57A*6M200001~6M299999 | |
| | EK | Ireland | SC57E-2200001~2299999 | JH2SC57A*6M200001~6M299999 | |
| | F | France | SC57E-2200001~2299999 | JH2SC57C*6M200001~6M299999 | |
| | KO | Korea | SC57E-2200001~2299999 | JH2SC57K*6M200001~6M299999 | |
| | MX | Mexico | SC57E-2200001~2299999 | JH2SC579*6M200001~6M299999 | |
| | U | Australia | SC57E-2200001~2299999 | JH2SC57U*6M200001~6M299999 | |
| CBR1000RR7 | BR | Brazil | SC57E-2300001~ | JH2SC579*7M300001~ | GQA1A A |
| | E | England | SC57E-2300001~ | JH2SC57A*7M300001~ | |
| | ED | European direct sales | SC57E-2300001~ | JH2SC57A*7M300001~ | |
| | EK | Ireland | SC57E-2300001~ | JH2SC57A*7M300001~ | |
| | F | France | SC57E-2300001~ | JH2SC57C*7M300001~ | |
| | KO | Korea | SC57E-2300001~ | JH2SC57K*7M300001~ | |
| | MX | Mexico | SC57E-2300001~ | JH2SC579*7M300001~ | |
| | U | Australia | SC57E-2300001~ | JH2SC57U*7M300001~ | |
| | 2ED | European direct sales | SC57E-2300001~ | JH2SC57A*7M300001~ | |
| | 2F | France | SC57E-2300001~ | JH2SC57C*7M300001~ | |
| | 3E | England | SC57E-2300001~ | JH2SC57A*7M300001~ | |
| | 4EK | Ireland | SC57E-2300001~ | JH2SC57A*7M300001~ | |

* Of carburetor/throttle body identification numbers, only the portions underlined in the example below are used for registration.

GQA0A A KC ア

# Color label

- When ordering parts, check the model name, main color, and code by observing the "COLOR LABEL" on the vehicle.
- When ordering a colored part, use the color chart in the instruction for use of parts catalogue.

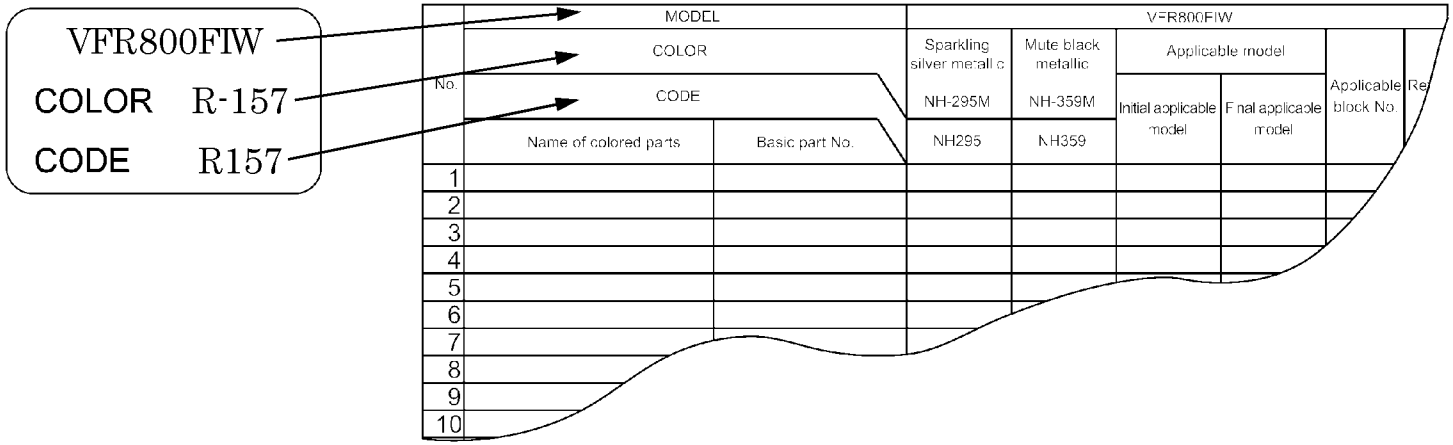

# Color chart



- When ordering a colored part, refer to the chart below and use a part number consisting of the relevant basic part number to which has been added a part color code.

CBR1000RR (CBR1000RR4).....BR,MX

| No. | MODEL | | CBR1000RR4 | | | | | | |
|---|---|---|---|---|---|---|---|---|---|
| | COLOR | | Black | Winning red | Force silver metallic | Applicable model | | Applicable block No. | Ref.No. |
| | CODE | | NH-1 | R-258 | NH-411M | | | | |
| | Name of colored parts | Basic part No. | NH1 | R258B | NH411B | Initial applicable model | Final applicable model | | |
| 1 | BODY ASSY., FRAME | 50010-MEL-670 | ZA | ZA | ZA | | | F-33 | 2 |
| 2 | CLIP, PANEL FIXING | 91549-MW0-790 | ZA | ZA | ZA | | | F-20-1 | 17 |
| 3 | CLIP, PANEL FIXING | 91549-MW0-790 | ZA | ZA | ZA | | | F-35 | 32 |
| 4 | CLIP, PANEL FIXING | 91549-MW0-790 | ZA | ZA | ZA | | | F-38 | 28 |
| 5 | COWL COMP., UPPER | 64211-MEL-000 | ZA | ZB | ZC | | | F-36 | 3 |
| 6 | COWL SET, L. MIDDLE | 64350-MEL-670 | ZA | ZD | ZE | | | F-37 | 6 |
| 7 | COWL SET, L. UNDER | 64450-MEL-670 | ZF | ZG | ZH | | | F-38 | 17 |
| 8 | COWL SET, R. MIDDLE | 64300-MEL-671 | ZA | ZD | ZE | | 4M000349 | F-37 | 4 |
| 9 | COWL SET, R. MIDDLE | 64300-MEL-672 | ZA | ZD | ZE | 4M000350 | | F-37 | 4 |
| 10 | COWL SET, R. UNDER | 64400-MEL-670 | ZF | ZG | ZH | | | F-38 | 11 |
| 11 | COWL SET, RR. SEAT | 77210-MEL-010 | ZE | ZF | ZG | | | F-19 | 2 |
| 12 | FENDER COMP., FR. | 61100-MEL-000 | ZA | ZC | ZB | | | F-9 | 1 |
| 13 | LABEL, COLOR | 87565-MEL-000 | ZD | ZE | ZF | | | F-39 | 10 |
| 14 | MARK, DRIVE CAUTION | 87560-MM5-900 | ZA | ZA | ZA | | | F-39 | 8 |
| 15 | MARK, L. TOP SHELTER | 64852-MEL-000 | - | ZA | ZC | | | F-40-1 | 14 |
| 16 | MARK, L. TOP SHELTER | 64856-MEL-000 | ZA | - | - | | | F-40 | 8 |
| 17 | MARK, MIDDLE COWL | 64811-MEL-000 | ZA | - | - | | | F-40 | 10 |
| 18 | MARK, R. TOP SHELTER | 64851-MEL-000 | - | ZA | ZC | | | F-40-1 | 13 |
| 19 | MARK, R. TOP SHELTER | 64855-MEL-000 | ZA | - | - | | | F-40 | 7 |
| 20 | MARK, RR. SEAT COWL | 64841-MEL-000 | ZA | - | - | | | F-40 | 5 |
| 21 | MARK, RR. SEAT COWL | 64841-MEL-000 | - | ZB | ZD | | | F-40-1 | 11 |
| 22 | MARK, RR. SEAT COWL | 64842-MEL-000 | ZA | - | - | | | F-40 | 6 |
| 23 | MARK, RR. SEAT COWL | 64842-MEL-000 | - | ZB | ZD | | | F-40-1 | 12 |
| 24 | MARK, UNDER COWL | 64819-MEL-000 | ZD | - | - | | | F-40 | 3 |
| 25 | MARK, UNDER COWL | 64819-MEL-000 | - | ZE | ZB | | | F-40-1 | 10 |

CBR1000RR (CBR1000RR4).....BR,MX

| No. | MODEL | | CBR1000RR4 | | | | | | |
|---|---|---|---|---|---|---|---|---|---|
| | COLOR | | Black | Winning red | Force silver metallic | Applicable model | | Applicable block No. | Ref.No. |
| | CODE | | NH-1 | R-258 | NH-411M | | | | |
| | Name of colored parts | Basic part No. | NH1 | R258B | NH411B | Initial applicable model | Final applicable model | | |
| 26 | RAIL ASSY., SEAT | 50200-MEL-010 | ZA | ZA | ZA | | | F-33 | 12 |
| 27 | SHELTER SET, TOP | 83150-MEL-010 | ZG | ZH | ZJ | | | F-16 | 5 |
| 28 | STRIPE A, L. MIDDLE COWL | 64814-MEL-670 | - | ZC | ZA | | | F-40-1 | 5 |
| 29 | STRIPE A, R. MIDDLE COWL | 64813-MEL-670 | - | ZC | ZA | | | F-40-1 | 3 |
| 30 | STRIPE C, L. MIDDLE COWL | 64818-MEL-670 | - | ZA | ZB | | | F-40-1 | 9 |
| 31 | STRIPE C, R. MIDDLE COWL | 64817-MEL-670 | - | ZA | ZB | | | F-40-1 | 8 |
| 32 | STRIPE, L. TOP SHELTER | 64854-MEL-000 | - | ZB | ZB | | | F-40-1 | 16 |
| 33 | STRIPE, R. TOP SHELTER | 64853-MEL-000 | - | ZB | ZB | | | F-40-1 | 15 |
| 34 | STRIPE, WINDSCREEN | 64805-MEL-000 | ZA | ZA | ZA | | | F-40 | 1 |
| 35 | STRIPE, WINDSCREEN | 64805-MEL-000 | ZA | ZA | ZA | | | F-40-1 | 1 |
| 36 | WHEEL SUB ASSY., FR. | 44650-MEL-010 | ZA | ZA | ZA | | | F-12 | 7 |
| 37 | WHEEL SUB ASSY., RR. | 42650-MEL-010 | ZA | ZA | ZA | | | F-15 | 9 |
| 38 | WINDSCREEN SET | 64250-MEL-000 | ZA | ZA | ZA | | | F-36 | 6 |

CBR1000RR (CBR1000RR4).....E,ED,F,G,KO,U

| No. | MODEL | | CBR1000RR4 | | | | | | |
|---|---|---|---|---|---|---|---|---|---|
| | COLOR | | Black | Winning red | Pearl fadelees white | Applicable model | | Applicable block No. | Ref.No. |
| | CODE | | NH-1 | R-258 | NH-341P | | | | |
| | Name of colored parts | Basic part No. | NH1E | R258BB | NH341KB | Initial applicable model | Final applicable model | | |
| 1 | BODY ASSY., FRAME | 50010-MEL-000 | ZA | ZA | ZA | | | F-33 | 2 |
| 2 | BODY ASSY., FRAME | 50010-MEL-670 | ZA | ZA | ZA | | | F-33 | 2 |
| 3 | CLIP, PANEL FIXING | 91549-MW0-790 | ZA | ZA | ZA | | | F-20-1 | 17 |
| 4 | CLIP, PANEL FIXING | 91549-MW0-790 | ZA | ZA | ZA | | | F-35 | 32 |
| 5 | CLIP, PANEL FIXING | 91549-MW0-790 | ZA | ZA | ZA | | | F-38 | 28 |
| 6 | COWL COMP., UPPER | 64211-MEL-000 | ZA | ZB | ZB | | | F-36 | 3 |
| 7 | COWL SET, L. MIDDLE | 64350-MEL-000 | ZG | ZH | ZJ | | | F-37 | 5 |
| 8 | COWL SET, L. MIDDLE | 64350-MEL-010 | ZG | ZH | ZJ | | 4M011418 | F-37 | 5 |
| 9 | COWL SET, L. MIDDLE | 64350-MEL-020 | ZG | ZH | ZJ | 4M011419 | | F-37 | 5 |
| 10 | COWL SET, L. UNDER | 64450-MEL-010 | ZF | ZG | ZC | | | F-38 | 16 |
| 11 | COWL SET, R. MIDDLE | 64300-MEL-000 | ZG | ZH | ZJ | | 4M000210 | F-37 | 3 |
| 12 | COWL SET, R. MIDDLE | 64300-MEL-000 | ZG | ZH | ZJ | | 4M000377 | F-37 | 3 |
| 13 | COWL SET, R. MIDDLE | 64300-MEL-000 | ZG | ZH | ZJ | | 4M002851 | F-37 | 3 |
| 14 | COWL SET, R. MIDDLE | 64300-MEL-010 | ZG | ZH | ZJ | | 4M006438 | F-37 | 3 |
| 15 | COWL SET, R. MIDDLE | 64300-MEL-020 | ZG | ZH | ZJ | | | F-37 | 3 |
| 16 | COWL SET, R. MIDDLE | 64300-MEL-020 | ZG | ZH | ZJ | 4M000211 | | F-37 | 3 |
| 17 | COWL SET, R. MIDDLE | 64300-MEL-020 | ZG | ZH | ZJ | 4M000378 | | F-37 | 3 |
| 18 | COWL SET, R. MIDDLE | 64300-MEL-020 | ZG | ZH | ZJ | 4M002852 | | F-37 | 3 |
| 19 | COWL SET, R. MIDDLE | 64300-MEL-020 | ZG | ZH | ZJ | 4M006439 | 4M011418 | F-37 | 3 |
| 20 | COWL SET, R. MIDDLE | 64300-MEL-030 | ZG | ZH | ZJ | 4M011419 | | F-37 | 3 |
| 21 | COWL SET, R. UNDER | 64400-MEL-010 | ZF | ZG | ZC | | | F-38 | 10 |
| 22 | COWL SET, RR. SEAT | 77210-MEL-010 | ZE | ZF | ZH | | | F-19 | 2 |
| 23 | FENDER COMP., FR. | 61100-MEL-000 | ZA | ZC | ZC | | | F-9 | 1 |
| 24 | LABEL, COLOR | 87565-MEL-000 | ZA | ZB | ZC | | | F-39 | 10 |
| 25 | MARK | 64820-MEL-000 | ZA | ZB | - | | | F-40 | 4 |
| 26 | MARK, L. TOP SHELTER | 64852-MEL-000 | - | - | ZB | | | F-40-1 | 14 |
| 27 | MARK, L. TOP SHELTER | 64856-MEL-000 | ZA | ZB | - | | | F-40 | 8 |
| 28 | MARK, MIDDLE COWL | 64811-MEL-000 | ZA | ZB | - | | | F-40 | 10 |
| 29 | MARK, R. TOP SHELTER | 64851-MEL-000 | - | - | ZB | | | F-40-1 | 13 |
| 30 | MARK, R. TOP SHELTER | 64855-MEL-000 | ZA | ZB | - | | | F-40 | 7 |

CBR1000RR (CBR1000RR4).....E,ED,F,G,KO,U

| No. | MODEL | | CBR1000RR4 | | | | | | |
|---|---|---|---|---|---|---|---|---|---|
| | COLOR | | Black | Winning red | Pearl fadelees white | Applicable model | | Applicable block No. | Ref.No. |
| | CODE | | NH-1 | R-258 | NH-341P | | | | |
| | Name of colored parts | Basic part No. | NH1E | R258BB | NH341KB | Initial applicable model | Final applicable model | | |
| 31 | MARK, RR. SEAT COWL | 64841-MEL-000 | ZA | ZB | - | | | F-40 | 5 |
| 32 | MARK, RR. SEAT COWL | 64841-MEL-000 | - | - | ZC | | | F-40-1 | 11 |
| 33 | MARK, RR. SEAT COWL | 64842-MEL-000 | ZA | ZB | - | | | F-40 | 6 |
| 34 | MARK, RR. SEAT COWL | 64842-MEL-000 | - | - | ZC | | | F-40-1 | 12 |
| 35 | MARK, UNDER COWL | 64819-MEL-000 | ZA | ZB | - | | | F-40 | 3 |
| 36 | MARK, UNDER COWL | 64819-MEL-000 | - | - | ZC | | | F-40-1 | 10 |
| 37 | RAIL ASSY., SEAT | 50200-MEL-010 | ZA | ZA | ZA | | | F-33 | 12 |
| 38 | SHELTER SET, TOP | 83150-MEL-010 | ZG | ZK | ZL | | | F-16 | 5 |
| 39 | STRIPE A, L. MIDDLE COWL | 64814-MEL-000 | - | - | ZA | | | F-40-1 | 4 |
| 40 | STRIPE A, R. MIDDLE COWL | 64813-MEL-000 | - | - | ZA | | | F-40-1 | 2 |
| 41 | STRIPE B, L. MIDDLE COWL | 64816-MEL-000 | - | - | ZA | | | F-40-1 | 7 |
| 42 | STRIPE B, R. MIDDLE COWL | 64815-MEL-000 | - | - | ZA | | | F-40-1 | 6 |
| 43 | STRIPE C, L. MIDDLE COWL | 64818-MEL-000 | - | - | ZA | | | F-40-1 | 9 |
| 44 | STRIPE C, R. MIDDLE COWL | 64817-MEL-000 | - | - | ZA | | | F-40-1 | 8 |
| 45 | STRIPE, L. TOP SHELTER | 64854-MEL-000 | - | - | ZA | | | F-40-1 | 16 |
| 46 | STRIPE, R. TOP SHELTER | 64853-MEL-000 | - | - | ZA | | | F-40-1 | 15 |
| 47 | STRIPE, WINDSCREEN | 64805-MEL-000 | ZA | ZA | ZA | | | F-40 | 1 |
| 48 | STRIPE, WINDSCREEN | 64805-MEL-000 | ZA | ZA | ZA | | | F-40-1 | 1 |
| 49 | WHEEL SUB ASSY., FR. | 44650-MEL-010 | ZA | ZA | ZA | | | F-12 | 7 |
| 50 | WHEEL SUB ASSY., RR. | 42650-MEL-010 | ZA | ZA | ZA | | | F-15 | 9 |
| 51 | WINDSCREEN SET | 64250-MEL-000 | ZA | ZA | ZA | | | F-36 | 6 |

CBR1000RR (CBR1000RR5).....BR,MX,U

| No. | MODEL | | CBR1000RR5 | | | | | | |
|---|---|---|---|---|---|---|---|---|---|
| | COLOR | | Black | Winning red | Titanium metallic | Applicable model | | Applicable block No. | Ref.No. |
| | CODE | | NH-1 | R-258 | YR-183M | | | | |
| | Name of colored parts | Basic part No. | NH1E | R258 | YR183 | Initial applicable model | Final applicable model | | |
| 1 | BODY ASSY., FRAME | 50010-MEL-000 | ZA | ZA | ZA | | 5M100639 | F-33 | 2 |
| 2 | BODY ASSY., FRAME | 50010-MEL-010 | ZA | ZA | ZA | 5M100640 | | F-33 | 2 |
| 3 | BODY ASSY., FRAME | 50010-MEL-670 | ZA | ZA | ZA | | 5M100137 | F-33 | 2 |
| 4 | BODY ASSY., FRAME | 50010-MEL-671 | ZA | ZA | ZA | 5M100138 | | F-33 | 2 |
| 5 | CLIP, PANEL FIXING | 91549-MW0-790 | ZA | ZA | ZA | | | F-20-1 | 17 |
| 6 | CLIP, PANEL FIXING | 91549-MW0-790 | ZA | ZA | ZA | | | F-35 | 32 |
| 7 | CLIP, PANEL FIXING | 91549-MW0-790 | ZA | ZA | ZA | | | F-38 | 28 |
| 8 | COWL COMP., UPPER | 64211-MEL-D00 | ZA | ZB | ZC | | | F-36 | 3 |
| 9 | COWL SET, L. MIDDLE | 64350-MEL-A00 | ZA | ZD | ZE | | | F-37 | 6 |
| 10 | COWL SET, L. UNDER | 64450-MEL-A00 | ZA | ZB | ZC | | | F-38 | 17 |
| 11 | COWL SET, L. UNDER | 64450-MEL-U00 | ZA | ZB | ZC | | | F-38 | 16 |
| 12 | COWL SET, R. MIDDLE | 64300-MEL-A01 | ZA | ZD | ZE | | | F-37 | 4 |
| 13 | COWL SET, R. MIDDLE | 64300-MEL-U00 | ZA | ZD | ZE | | 5M100189 | F-37 | 3 |
| 14 | COWL SET, R. MIDDLE | 64300-MEL-U01 | ZA | ZD | ZE | 5M100190 | | F-37 | 3 |
| 15 | COWL SET, R. UNDER | 64400-MEL-A00 | ZA | ZB | ZC | | | F-38 | 11 |
| 16 | COWL SET, R. UNDER | 64400-MEL-U00 | ZA | ZB | ZC | | | F-38 | 10 |
| 17 | COWL SET, RR. SEAT | 77210-MEL-D00 | ZA | ZB | ZC | | | F-19 | 2 |
| 18 | FENDER COMP., FR. | 61100-MEL-000 | ZA | ZC | ZD | | | F-9 | 1 |
| 19 | LABEL, COLOR | 87565-MEL-D00 | ZA | ZB | ZC | | | F-39 | 10 |
| 20 | MARK, DRIVE CAUTION | 87560-MM5-900 | ZA | ZA | ZA | | | F-39 | 8 |
| 21 | MARK, L. TOP SHELTER | 64852-MEL-A00 | ZA | - | ZB | | | F-40-3 | 11 |
| 22 | MARK, L. TOP SHELTER | 64852-MEL-000 | - | ZA | - | | | F-40-3 | 11 |
| 23 | MARK, R. TOP SHELTER | 64851-MEL-A00 | ZA | - | ZB | | | F-40-3 | 10 |
| 24 | MARK, R. TOP SHELTER | 64851-MEL-000 | - | ZA | - | | | F-40-3 | 10 |
| 25 | MARK, RR. SEAT COWL | 64841-MEL-D00 | ZA | ZB | ZC | | | F-40-3 | 8 |
| 26 | MARK, RR. SEAT COWL | 64842-MEL-D00 | ZA | ZB | ZC | | | F-40-3 | 9 |
| 27 | MARK, UNDER COWL | 64819-MEL-D00 | ZA | ZB | ZC | | | F-40-3 | 6 |
| 28 | MARK, UNDER COWL | 64825-MEL-D00 | ZA | ZB | ZC | | | F-40-3 | 7 |
| 29 | RAIL ASSY., SEAT | 50200-MEL-010 | ZA | ZA | ZA | | | F-33 | 12 |
| 30 | SHELTER SET, TOP | 83150-MEL-A00 | ZA | ZB | ZC | | | F-16 | 6 |

CBR1000RR (CBR1000RR5).....BR,MX,U

| No. | MODEL | | CBR1000RR5 | | | | | | |
|---|---|---|---|---|---|---|---|---|---|
| | COLOR | | Black | Winning red | Titanium metallic | Applicable model | | Applicable block No. | Ref.No. |
| | CODE | | NH-1 | R-258 | YR-183M | | | | |
| | Name of colored parts | Basic part No. | NH1E | R258 | YR183 | Initial applicable model | Final applicable model | | |
| 31 | SHELTER SET, TOP | 83150-MEL-U00 | ZA | ZB | ZC | | | F-16 | 5 |
| 32 | STRIPE A, L. MIDDLE COWL | 64814-MEL-A00 | ZA | ZB | ZC | | | F-40-3 | 3 |
| 33 | STRIPE A, R. MIDDLE COWL | 64813-MEL-A00 | ZA | ZB | ZC | | | F-40-3 | 2 |
| 34 | STRIPE C, L. MIDDLE COWL | 64818-MEL-A00 | ZA | - | ZB | | | F-40-3 | 5 |
| 35 | STRIPE C, L. MIDDLE COWL | 64818-MEL-670 | - | ZA | - | | | F-40-3 | 5 |
| 36 | STRIPE C, R. MIDDLE COWL | 64817-MEL-A00 | ZA | - | ZB | | | F-40-3 | 4 |
| 37 | STRIPE C, R. MIDDLE COWL | 64817-MEL-670 | - | ZA | - | | | F-40-3 | 4 |
| 38 | STRIPE, L. TOP SHELTER | 64854-MEL-A00 | ZA | - | - | | | F-40-3 | 13 |
| 39 | STRIPE, L. TOP SHELTER | 64854-MEL-000 | - | ZB | ZB | | | F-40-3 | 13 |
| 40 | STRIPE, R. TOP SHELTER | 64853-MEL-A00 | ZA | - | - | | | F-40-3 | 12 |
| 41 | STRIPE, R. TOP SHELTER | 64853-MEL-000 | - | ZB | ZB | | | F-40-3 | 12 |
| 42 | STRIPE, WINDSCREEN | 64805-MEL-000 | ZA | ZA | ZA | | | F-40-3 | 1 |
| 43 | WHEEL SUB ASSY., FR. | 44650-MEL-010 | ZA | ZA | ZA | | | F-12 | 7 |
| 44 | WHEEL SUB ASSY., RR. | 42650-MEL-010 | ZA | ZA | ZA | | | F-15 | 9 |
| 45 | WINDSCREEN SET | 64250-MEL-000 | ZA | ZA | ZA | | | F-36 | 6 |

CBR1000RR (CBR1000RR5).....E,ED,EK,F,G,KO

| No. | MODEL | | CBR1000RR5 | | | | | | |
|---|---|---|---|---|---|---|---|---|---|
| | COLOR | | Black | Winning red | Candy tahitian blue | Applicable model | | Applicable block No. | Ref.No. |
| | CODE | | NH-1 | R-258 | PB-215C | | | | |
| | Name of colored parts | Basic part No. | NH1 | R258H | PB215H | Initial applicable model | Final applicable model | | |
| 1 | BODY ASSY., FRAME | 50010-MEL-000 | ZA | ZA | ZA | | 5M100791 | F-33 | 2 |
| 2 | BODY ASSY., FRAME | 50010-MEL-000 | ZA | ZA | ZA | | 5M102525 | F-33 | 2 |
| 3 | BODY ASSY., FRAME | 50010-MEL-000 | ZA | ZA | ZA | | 5M107940 | F-33 | 2 |
| 4 | BODY ASSY., FRAME | 50010-MEL-010 | ZA | ZA | ZA | 5M100792 | | F-33 | 2 |
| 5 | BODY ASSY., FRAME | 50010-MEL-010 | ZA | ZA | ZA | 5M102526 | | F-33 | 2 |
| 6 | BODY ASSY., FRAME | 50010-MEL-010 | ZA | ZA | ZA | 5M107941 | | F-33 | 2 |
| 7 | BODY ASSY., FRAME | 50010-MEL-670 | ZA | ZA | - | | 5M100137 | F-33 | 2 |
| 8 | BODY ASSY., FRAME | 50010-MEL-671 | ZA | ZA | - | 5M100138 | | F-33 | 2 |
| 9 | CLIP, PANEL FIXING | 91549-MW0-790 | ZA | ZA | ZA | | | F-20-1 | 17 |
| 10 | CLIP, PANEL FIXING | 91549-MW0-790 | ZA | ZA | ZA | | | F-35 | 32 |
| 11 | CLIP, PANEL FIXING | 91549-MW0-790 | ZA | ZA | ZA | | | F-38 | 28 |
| 12 | COWL COMP., UPPER | 64211-MEL-D00 | ZA | ZB | ZD | | | F-36 | 3 |
| 13 | COWL SET, L. MIDDLE | 64350-MEL-D00 | ZA | ZB | ZD | | | F-37 | 5 |
| 14 | COWL SET, L. UNDER | 64450-MEL-D00 | ZA | ZB | ZC | | | F-38 | 16 |
| 15 | COWL SET, R. MIDDLE | 64300-MEL-D00 | ZA | ZB | ZD | | | F-37 | 3 |
| 16 | COWL SET, R. UNDER | 64400-MEL-D00 | ZA | ZB | ZC | | | F-38 | 10 |
| 17 | COWL SET, RR. SEAT | 77210-MEL-D00 | ZA | ZB | ZD | | | F-19 | 2 |
| 18 | FENDER COMP., FR. | 61100-MEL-000 | ZA | ZC | ZE | | | F-9 | 1 |
| 19 | LABEL, COLOR | 87565-MEL-D00 | ZD | ZE | ZF | | | F-39 | 10 |
| 20 | MARK, L. TOP SHELTER | 64852-MEL-D00 | - | ZA | ZB | | | F-40-2 | 20 |
| 21 | MARK, L. TOP SHELTER | 64856-MEL-D00 | ZA | - | - | | | F-40 | 8 |
| 22 | MARK, MIDDLE COWL | 64811-MEL-D00 | ZA | - | - | | | F-40 | 2 |
| 23 | MARK, R. TOP SHELTER | 64851-MEL-D00 | - | ZA | ZB | | | F-40-2 | 19 |
| 24 | MARK, R. TOP SHELTER | 64855-MEL-D00 | ZA | - | - | | | F-40 | 7 |
| 25 | MARK, RR. SEAT COWL | 64841-MEL-D00 | ZA | - | - | | | F-40 | 5 |
| 26 | MARK, RR. SEAT COWL | 64841-MEL-D00 | - | ZB | ZD | | | F-40-2 | 17 |
| 27 | MARK, RR. SEAT COWL | 64842-MEL-D00 | ZA | - | - | | | F-40 | 6 |
| 28 | MARK, RR. SEAT COWL | 64842-MEL-D00 | - | ZB | ZD | | | F-40-2 | 18 |
| 29 | MARK, UNDER COWL | 64819-MEL-D00 | ZE | - | - | | | F-40 | 3 |
| 30 | MARK, UNDER COWL | 64819-MEL-D00 | - | ZD | ZD | | | F-40-2 | 8 |

CBR1000RR (CBR1000RR5).....E,ED,EK,F,G,KO

| No. | MODEL | | CBR1000RR5 | | | | | | |
|---|---|---|---|---|---|---|---|---|---|
| | COLOR | | Black | Winning red | Candy tahitian blue | Applicable model | | Applicable block No. | Ref.No. |
| | CODE | | NH-1 | R-258 | PB-215C | | | | |
| | Name of colored parts | Basic part No. | NH1 | R258H | PB215H | Initial applicable model | Final applicable model | | |
| 31 | MARK, UNDER COWL | 64825-MEL-D00 | ZF | - | - | | | F-40 | 9 |
| 32 | MARK, UNDER COWL | 64825-MEL-D00 | - | ZD | ZD | | | F-40-2 | 14 |
| 33 | RAIL ASSY., SEAT | 50200-MEL-010 | ZA | ZA | ZA | | | F-33 | 12 |
| 34 | SHELTER SET, TOP | 83150-MEL-D00 | ZD | ZB | ZC | | | F-16 | 5 |
| 35 | STRIPE A, L. MIDDLE COWL | 64814-MEL-D00 | - | ZA | ZB | | | F-40-2 | 3 |
| 36 | STRIPE A, L. TOP SHELTER | 64854-MEL-D00 | - | ZA | ZB | | | F-40-2 | 22 |
| 37 | STRIPE A, R. MIDDLE COWL | 64813-MEL-D00 | - | ZA | ZB | | | F-40-2 | 2 |
| 38 | STRIPE A, R. TOP SHELTER | 64853-MEL-D00 | - | ZA | ZB | | | F-40-2 | 21 |
| 39 | STRIPE B, L. MIDDLE COWL | 64816-MEL-D00 | - | ZA | ZB | | | F-40-2 | 5 |
| 40 | STRIPE B, L. TOP SHELTER | 64858-MEL-D00 | - | ZA | ZB | | | F-40-2 | 24 |
| 41 | STRIPE B, R. MIDDLE COWL | 64815-MEL-D00 | - | ZA | ZB | | | F-40-2 | 4 |
| 42 | STRIPE B, R. TOP SHELTER | 64857-MEL-D00 | - | ZA | ZB | | | F-40-2 | 23 |
| 43 | STRIPE C, L. MIDDLE COWL | 64818-MEL-D00 | - | ZA | ZB | | | F-40-2 | 7 |
| 44 | STRIPE C, R. MIDDLE COWL | 64817-MEL-D00 | - | ZA | ZB | | | F-40-2 | 6 |
| 45 | STRIPE D, L. MIDDLE COWL | 64822-MEL-D00 | - | ZA | ZB | | | F-40-2 | 11 |
| 46 | STRIPE D, R. MIDDLE COWL | 64821-MEL-D00 | - | ZA | ZB | | | F-40-2 | 10 |
| 47 | STRIPE E, L. MIDDLE COWL | 64824-MEL-D00 | - | ZA | ZB | | | F-40-2 | 13 |
| 48 | STRIPE E, R. MIDDLE COWL | 64823-MEL-D00 | - | ZA | ZB | | | F-40-2 | 12 |
| 49 | STRIPE, L. UNDER COWL | 64827-MEL-D00 | - | ZA | ZB | | | F-40-2 | 16 |
| 50 | STRIPE, R. UNDER COWL | 64826-MEL-D00 | - | ZA | ZB | | | F-40-2 | 15 |
| 51 | STRIPE, WINDSCREEN | 64805-MEL-000 | ZA | ZA | ZA | | | F-40 | 1 |
| 52 | STRIPE, WINDSCREEN | 64805-MEL-000 | ZA | ZA | ZA | | | F-40-2 | 1 |
| 53 | WHEEL SUB ASSY., FR. | 44650-MEL-010 | ZA | ZA | ZA | | | F-12 | 7 |
| 54 | WHEEL SUB ASSY., RR. | 42650-MEL-010 | ZA | ZA | ZA | | | F-15 | 9 |
| 55 | WINDSCREEN SET | 64250-MEL-000 | ZA | ZA | ZA | | | F-36 | 6 |

CBR1000RR (CBR1000RR5).....2ED,2F,2G,2KO,2U,3E,4EK

| No. | MODEL | | CBR1000RR5 | | | | |
|---|---|---|---|---|---|---|---|
| | COLOR | | Pearl siren blue-A | Applicable model | | Applicable block No. | Ref.No. |
| | CODE | | PB-123P-A | | | | |
| | Name of colored parts | Basic part No. | PB123 | Initial applicable model | Final applicable model | | |
| 1 | BODY ASSY., FRAME | 50010-MEL-000 | ZA | | 5M100639 | F-33 | 2 |
| 2 | BODY ASSY., FRAME | 50010-MEL-000 | ZA | | 5M100791 | F-33 | 2 |
| 3 | BODY ASSY., FRAME | 50010-MEL-000 | ZA | | 5M102525 | F-33 | 2 |
| 4 | BODY ASSY., FRAME | 50010-MEL-000 | ZA | | 5M107940 | F-33 | 2 |
| 5 | BODY ASSY., FRAME | 50010-MEL-010 | ZA | 5M100640 | | F-33 | 2 |
| 6 | BODY ASSY., FRAME | 50010-MEL-010 | ZA | 5M100792 | | F-33 | 2 |
| 7 | BODY ASSY., FRAME | 50010-MEL-010 | ZA | 5M102526 | | F-33 | 2 |
| 8 | BODY ASSY., FRAME | 50010-MEL-010 | ZA | 5M107941 | | F-33 | 2 |
| 9 | BODY ASSY., FRAME | 50010-MEL-670 | ZA | | 5M100137 | F-33 | 2 |
| 10 | BODY ASSY., FRAME | 50010-MEL-671 | ZA | 5M100138 | | F-33 | 2 |
| 11 | CLIP, PANEL FIXING | 91549-MW0-790 | ZA | | | F-20-1 | 17 |
| 12 | CLIP, PANEL FIXING | 91549-MW0-790 | ZA | | | F-35 | 32 |
| 13 | CLIP, PANEL FIXING | 91549-MW0-790 | ZA | | | F-38 | 28 |
| 14 | COWL SET, L. MIDDLE | 64350-MEL-D10 | ZB | | | F-37 | 5 |
| 15 | COWL SET, L. UNDER | 64450-MEL-D11 | ZA | | | F-38 | 16 |
| 16 | COWL SET, R. MIDDLE | 64300-MEL-D10 | ZB | | 5M100255 | F-37 | 3 |
| 17 | COWL SET, R. MIDDLE | 64300-MEL-D10 | ZB | | 5M100601 | F-37 | 3 |
| 18 | COWL SET, R. MIDDLE | 64300-MEL-D10 | ZB | | 5M102657 | F-37 | 3 |
| 19 | COWL SET, R. MIDDLE | 64300-MEL-D11 | ZB | | | F-37 | 3 |
| 20 | COWL SET, R. MIDDLE | 64300-MEL-D11 | ZB | 5M100236 | | F-37 | 3 |
| 21 | COWL SET, R. MIDDLE | 64300-MEL-D11 | ZB | 5M100256 | | F-37 | 3 |
| 22 | COWL SET, R. MIDDLE | 64300-MEL-D11 | ZB | 5M100602 | | F-37 | 3 |
| 23 | COWL SET, R. MIDDLE | 64300-MEL-D11 | ZB | 5M102658 | | F-37 | 3 |
| 24 | COWL SET, R. MIDDLE | 64300-MEL-U10 | ZA | | 5M100235 | F-37 | 3 |
| 25 | COWL SET, R. UNDER | 64400-MEL-D11 | ZA | | | F-38 | 10 |
| 26 | COWL SET, RR. SEAT | 77210-MEL-D10 | ZA | | | F-19 | 2 |
| 27 | COWL SET, UPPER | 64100-MEL-D10 | ZA | | | F-36 | 17 |
| 28 | FENDER SET, FR. | 61110-MEL-D10 | ZA | | | F-9 | 5 |
| 29 | LABEL, COLOR | 87565-MEL-D10 | ZA | | | F-39 | 10 |
| 30 | MARK, FR. FENDER | 61111-MEL-D10 | ZA | | | F-40-4 | 1 |

CBR1000RR (CBR1000RR5).....2ED,2F,2G,2KO,2U,3E,4EK

| No. | MODEL | | CBR1000RR5 | | | | |
|---|---|---|---|---|---|---|---|
| | COLOR | | Pearl siren blue-A | Applicable model | | Applicable block No. | Ref.No. |
| | CODE | | PB-123P-A | | | | |
| | Name of colored parts | Basic part No. | PB123 | Initial applicable model | Final applicable model | | |
| 31 | MARK, L. MIDDLE COWL | 64822-MEL-D10 | ZA | | | F-40-4 | 8 |
| 32 | MARK, L. TOP SHELTER | 64852-MEL-D10 | ZA | | | F-40-4 | 18 |
| 33 | MARK, L. UNDER COWL | 64825-MEL-D10 | ZA | | | F-40-4 | 11 |
| 34 | MARK, MIDDLE COWL | 64811-MEL-D10 | ZA | | | F-40-4 | 3 |
| 35 | MARK, R. MIDDLE COWL | 64812-MEL-D10 | ZA | | | F-40-4 | 4 |
| 36 | MARK, R. TOP SHELTER | 64851-MEL-D10 | ZA | | | F-40-4 | 17 |
| 37 | MARK, RR. SEAT COWL | 64841-MEL-D10 | ZA | | | F-40-4 | 12 |
| 38 | MARK, RR. SEAT COWL | 64842-MEL-D10 | ZA | | | F-40-4 | 13 |
| 39 | MARK, RR. SEAT COWL | 64843-MEL-D10 | ZA | | | F-40-4 | 14 |
| 40 | MARK, TOP SHELTER | 64859-MEL-D10 | ZA | | | F-40-4 | 21 |
| 41 | MARK, UNDER COWL | 64819-MEL-D10 | ZA | | | F-40-4 | 7 |
| 42 | RAIL ASSY., SEAT | 50200-MEL-010 | ZA | | | F-33 | 12 |
| 43 | SHELTER SET, TOP | 83150-MEL-D11 | ZA | | | F-16 | 5 |
| 44 | STRIPE A, L. UNDER COWL | 64823-MEL-D10 | ZA | | | F-40-4 | 9 |
| 45 | STRIPE A, R. UNDER COWL | 64813-MEL-D10 | ZA | | | F-40-4 | 5 |
| 46 | STRIPE B, L. UNDER COWL | 64824-MEL-D10 | ZA | | | F-40-4 | 10 |
| 47 | STRIPE B, R. UNDER COWL | 64814-MEL-D10 | ZA | | | F-40-4 | 6 |
| 48 | STRIPE, L. RR. SEAT COWL | 64845-MEL-D10 | ZA | | | F-40-4 | 16 |
| 49 | STRIPE, L. TOP SHELTER | 64858-MEL-D10 | ZA | | | F-40-4 | 20 |
| 50 | STRIPE, R. RR. SEAT COWL | 64844-MEL-D10 | ZA | | | F-40-4 | 15 |
| 51 | STRIPE, R. TOP SHELTER | 64857-MEL-D10 | ZA | | | F-40-4 | 19 |
| 52 | STRIPE, WINDSCREEN | 64805-MEL-D10 | ZA | | | F-40-4 | 2 |
| 53 | WHEEL SUB ASSY., FR. | 44650-MEL-D10 | ZA | | | F-12 | 7 |
| 54 | WHEEL SUB ASSY., RR. | 42650-MEL-D10 | ZA | | | F-15 | 9 |
| 55 | WINDSCREEN SET | 64250-MEL-D10 | ZA | | | F-36 | 6 |

CBR1000RR (CBR1000RR6).....BR,E,ED,EK,F,KO

| No. | MODEL | | CBR1000RR6 | | | | | | |
|---|---|---|---|---|---|---|---|---|---|
| | COLOR | | Graphite black | Winning red | Iron nail silver metallic-U | Applicable model | | Applicable block No. | Ref.No. |
| | CODE | | NH-B01 | R-258 | NH-167M-U | | | | |
| No. | Name of colored parts | Basic part No. | NHB01BA | R258BA | NH167EA | Initial applicable model | Final applicable model | | |
| 1 | BODY SET, FRAME | 50010-MEL-B20 | ZA | ZA | ZA | | | F-33 | 2 |
| 2 | BODY SET, FRAME | 50010-MEL-D20 | ZA | ZA | ZA | | | F-33 | 2 |
| 3 | CLIP, PANEL FIXING | 91549-MW0-790 | ZA | ZA | ZA | | | F-20-4 | 22 |
| 4 | COWL SET, L. MIDDLE | 64350-MEL-D20 | ZA | ZB | ZC | | | F-37-1 | 3 |
| 5 | COWL SET, L. UNDER | 64450-MEL-D20 | ZA | ZB | ZB | | | F-38-1 | 5 |
| 6 | COWL SET, R. MIDDLE | 64300-MEL-D20 | ZA | ZB | ZC | | | F-37-1 | 2 |
| 7 | COWL SET, R. UNDER | 64400-MEL-D20 | ZA | ZB | ZB | | | F-38-1 | 4 |
| 8 | COWL SET, RR. SEAT | 77210-MEL-D20 | ZA | ZB | ZC | | | F-19-1 | 2 |
| 9 | COWL SET, UPPER | 64100-MEL-D20 | ZC | - | - | | | F-36-1 | 1 |
| 10 | COWL SET, UPPER | 64100-MEL-D20 | - | ZD | ZE | | | F-36-1 | 3 |
| 11 | FENDER COMP., FR. | 61100-MEL-D20 | ZA | ZC | ZB | | | F-9 | 1 |
| 12 | LABEL, COLOR | 87565-MEL-D20 | ZA | ZB | ZC | | | F-39 | 10 |
| 13 | MARK | 64820-MEL-D20 | ZA | - | - | | | F-40-5 | 5 |
| 14 | MARK, L. TOP SHELTER | 64856-MEL-D20 | ZA | - | - | | | F-40-5 | 10 |
| 15 | MARK, MIDDLE COWL | 64811-MEL-D20 | ZA | - | - | | | F-40-5 | 2 |
| 16 | MARK, R. TOP SHELTER | 64855-MEL-D20 | ZA | - | - | | | F-40-5 | 9 |
| 17 | MARK, RR. SEAT COWL | 64841-MEL-D20 | ZA | - | - | | | F-40-5 | 7 |
| 18 | MARK, RR. SEAT COWL | 64841-MEL-D20 | - | ZB | ZC | | | F-40-6 | 9 |
| 19 | MARK, RR. SEAT COWL | 64842-MEL-D20 | ZA | - | - | | | F-40-5 | 8 |
| 20 | MARK, RR. SEAT COWL | 64842-MEL-D20 | - | ZB | ZC | | | F-40-6 | 10 |
| 21 | MARK, UNDER COWL | 64819-MEL-D20 | ZA | - | - | | | F-40-5 | 3 |
| 22 | MARK, UNDER COWL | 64819-MEL-D20 | - | ZB | ZB | | | F-40-6 | 7 |
| 23 | MARK, UNDER COWL | 64825-MEL-D20 | ZA | - | - | | | F-40-5 | 6 |
| 24 | MARK, UNDER COWL | 64825-MEL-D20 | - | ZB | ZB | | | F-40-6 | 8 |
| 25 | RAIL ASSY., SEAT | 50200-MEL-D20 | ZA | ZA | ZA | | | F-33 | 12 |
| 26 | SHELTER SET, TOP | 83150-MEL-D20 | ZA | ZD | ZE | | | F-16 | 5 |
| 27 | STRIPE A, L. MIDDLE COWL | 64814-MEL-D20 | - | ZA | ZB | | | F-40-6 | 4 |
| 28 | STRIPE A, L. TOP SHELTER | 64852-MEL-D20 | - | ZA | ZB | | | F-40-6 | 12 |
| 29 | STRIPE A, R. MIDDLE COWL | 64813-MEL-D20 | - | ZA | ZB | | | F-40-6 | 3 |
| 30 | STRIPE A, R. TOP SHELTER | 64851-MEL-D20 | - | ZA | ZB | | | F-40-6 | 11 |

CBR1000RR (CBR1000RR6).....BR,E,ED,EK,F,KO

| No. | MODEL | | CBR1000RR6 | | | | | | |
|---|---|---|---|---|---|---|---|---|---|
| | COLOR | | Graphite black | Winning red | Iron nail silver metallic·U | Applicable model | | Applicable block No. | Ref.No. |
| | CODE | | NH·B01 | R·258 | NH·167M·U | | | | |
| No. | Name of colored parts | Basic part No. | NHB01BA | R258BA | NH167EA | Initial applicable model | Final applicable model | | |
| 31 | STRIPE B, L. MIDDLE COWL | 64816·MEL·D20 | · | ZA | · | | | F·40·6 | 6 |
| 32 | STRIPE B, L. MIDDLE COWL | 64818·MEL·D20 | · | · | ZA | | | F·40·6 | 6 |
| 33 | STRIPE B, L. TOP SHELTER | 64854·MEL·D20 | · | ZA | ZB | | | F·40·6 | 14 |
| 34 | STRIPE B, R. MIDDLE COWL | 64815·MEL·D20 | · | ZA | · | | | F·40·6 | 5 |
| 35 | STRIPE B, R. MIDDLE COWL | 64817·MEL·D20 | · | · | ZA | | | F·40·6 | 5 |
| 36 | STRIPE B, R. TOP SHELTER | 64853·MEL·D20 | · | ZA | ZB | | | F·40·6 | 13 |
| 37 | STRIPE, UPPER COWL | 64101·MEL·D20 | · | ZA | ZB | | | F·40·6 | 1 |
| 38 | STRIPE, WINDSCREEN | 64805·MEL·000 | ZA | ZA | ZA | | | F·40·5 | 1 |
| 39 | STRIPE, WINDSCREEN | 64805·MEL·000 | ZA | ZA | ZA | | | F·40·6 | 2 |
| 40 | WHEEL SUB ASSY., FR. | 44650·MEL·D20 | ZC | ZC | ZC | | | F·12 | 7 |
| 41 | WHEEL SUB ASSY., RR. | 42650·MEL·D20 | ZC | ZC | ZC | | | F·15 | 9 |
| 42 | WINDSCREEN SET | 64250·MEL·000 | ZA | ZA | ZA | | | F·36·1 | 7 |

CBR1000RR (CBR1000RR6).....MX,U

| No. | MODEL | | CBR1000RR6 | | | | | | | |
|---|---|---|---|---|---|---|---|---|---|---|
| | COLOR | | Graphite black | Winning red | Iron nail silver metallic-U | Candy phoenix blue | Applicable model | | Applicable block No. | Ref.No. |
| | CODE | | NH-B01 | R-258 | NH-167M-U | PB-284C | | | | |
| | Name of colored parts | Basic part No. | NHB01BB | R258BB | NH167EB | PB284Y | Initial applicable model | Final applicable model | | |
| 1 | BODY SET, FRAME | 50010-MEL-B20 | ZA | ZA | ZA | ZA | | | F-33 | 2 |
| 2 | BODY SET, FRAME | 50010-MEL-D20 | ZA | ZA | ZA | ZA | | | F-33 | 2 |
| 3 | CLIP, PANEL FIXING | 91549-MW0-790 | ZA | ZA | ZA | ZA | | | F-20-4 | 22 |
| 4 | COWL SET, L. MIDDLE | 64350-MEL-A20 | ZA | ZB | ZC | ZD | | | F-37-1 | 3 |
| 5 | COWL SET, L. MIDDLE | 64350-MEL-U20 | ZA | ZB | ZC | ZD | | | F-37-1 | 3 |
| 6 | COWL SET, L. UNDER | 64450-MEL-D20 | ZB | ZA | ZA | ZA | | | F-38-1 | 5 |
| 7 | COWL SET, R. MIDDLE | 64300-MEL-A20 | ZA | ZB | ZC | ZD | | | F-37-1 | 2 |
| 8 | COWL SET, R. UNDER | 64400-MEL-D20 | ZB | ZA | ZA | ZA | | | F-38-1 | 4 |
| 9 | COWL SET, RR. SEAT | 77210-MEL-D20 | ZA | ZB | ZC | ZD | | | F-19-1 | 2 |
| 10 | COWL SET, UPPER | 64100-MEL-A20 | ZA | - | - | - | | | F-36-1 | 1 |
| 11 | COWL SET, UPPER | 64100-MEL-A20 | - | ZB | ZC | ZF | | | F-36-1 | 2 |
| 12 | FENDER COMP., FR. | 61100-MEL-D20 | ZA | ZC | ZB | ZD | | | F-9 | 1 |
| 13 | LABEL, COLOR | 87565-MEL-D20 | ZD | ZE | ZF | ZG | | | F-39 | 10 |
| 14 | MARK | 64820-MEL-A20 | ZA | - | - | - | | | F-40-5 | 4 |
| 15 | MARK, DRIVE CAUTION | 87560-MM5-900 | ZA | ZA | ZA | ZA | | | F-39 | 8 |
| 16 | MARK, L. TOP SHELTER | 64856-MEL-D20 | ZA | - | - | - | | | F-40-5 | 10 |
| 17 | MARK, MIDDLE COWL | 64811-MEL-D20 | ZA | - | - | - | | | F-40-5 | 2 |
| 18 | MARK, R. TOP SHELTER | 64855-MEL-D20 | ZA | - | - | - | | | F-40-5 | 9 |
| 19 | MARK, RR. SEAT COWL | 64841-MEL-D20 | ZA | - | - | - | | | F-40-5 | 7 |
| 20 | MARK, RR. SEAT COWL | 64841-MEL-D20 | - | ZB | ZC | ZD | | | F-40-7 | 11 |
| 21 | MARK, RR. SEAT COWL | 64842-MEL-D20 | ZA | - | - | - | | | F-40-5 | 8 |
| 22 | MARK, RR. SEAT COWL | 64842-MEL-D20 | - | ZB | ZC | ZD | | | F-40-7 | 12 |
| 23 | MARK, UNDER COWL | 64819-MEL-D20 | - | ZA | ZA | ZA | | | F-40-7 | 9 |
| 24 | MARK, UNDER COWL | 64819-MEL-D20 | ZB | - | - | - | | | F-40-5 | 3 |
| 25 | MARK, UNDER COWL | 64825-MEL-D20 | - | ZA | ZA | ZA | | | F-40-7 | 10 |
| 26 | MARK, UNDER COWL | 64825-MEL-D20 | ZB | - | - | - | | | F-40-5 | 6 |
| 27 | RAIL ASSY., SEAT | 50200-MEL-D20 | ZA | ZA | ZA | ZA | | | F-33 | 12 |
| 28 | SHELTER SET, TOP | 83150-MEL-D20 | ZA | ZD | ZE | ZF | | | F-16 | 5 |
| 29 | STRIPE A, L. MIDDLE COWL | 64814-MEL-A20 | - | - | - | ZA | | | F-40-7 | 6 |
| 30 | STRIPE A, L. MIDDLE COWL | 64814-MEL-D20 | - | ZA | ZB | - | | | F-40-7 | 6 |

CBR1000RR (CBR1000RR6).....MX,U

| No. | MODEL | | CBR1000RR6 | | | | | | | |
|---|---|---|---|---|---|---|---|---|---|---|
| | COLOR | | Graphite black | Winning red | Iron nail silver metallic-U | Candy phoenix blue | Applicable model | | Applicable block No. | Ref.No. |
| | CODE | | NH-B01 | R-258 | NH-167M-U | PB-284C | | | | |
| No. | Name of colored parts | Basic part No. | NHB01BB | R258BB | NH167EB | PB284Y | Initial applicable model | Final applicable model | | |
| 31 | STRIPE A, L. TOP SHELTER | 64852-MEL-D20 | - | ZA | ZB | ZC | | | F-40-7 | 14 |
| 32 | STRIPE A, R. MIDDLE COWL | 64813-MEL-A20 | - | - | - | ZA | | | F-40-7 | 5 |
| 33 | STRIPE A, R. MIDDLE COWL | 64813-MEL-D20 | - | ZA | ZB | - | | | F-40-7 | 5 |
| 34 | STRIPE A, R. TOP SHELTER | 64851-MEL-D20 | - | ZA | ZB | ZC | | | F-40-7 | 13 |
| 35 | STRIPE B, L. MIDDLE COWL | 64816-MEL-A20 | - | ZA | - | - | | | F-40-7 | 8 |
| 36 | STRIPE B, L. MIDDLE COWL | 64818-MEL-A20 | - | - | ZA | - | | | F-40-7 | 8 |
| 37 | STRIPE B, L. MIDDLE COWL | 64823-MEL-A20 | - | - | - | ZA | | | F-40-7 | 8 |
| 38 | STRIPE B, L. TOP SHELTER | 64854-MEL-D20 | - | ZA | ZB | ZC | | | F-40-7 | 16 |
| 39 | STRIPE B, R. MIDDLE COWL | 64815-MEL-A20 | - | ZA | - | - | | | F-40-7 | 7 |
| 40 | STRIPE B, R. MIDDLE COWL | 64817-MEL-A20 | - | - | ZA | - | | | F-40-7 | 7 |
| 41 | STRIPE B, R. MIDDLE COWL | 64822-MEL-A20 | - | - | - | ZA | | | F-40-7 | 7 |
| 42 | STRIPE B, R. TOP SHELTER | 64853-MEL-D20 | - | ZA | ZB | ZC | | | F-40-7 | 15 |
| 43 | STRIPE, L. UPPER COWL | 64103-MEL-A20 | - | ZA | ZB | ZC | | | F-40-7 | 3 |
| 44 | STRIPE, R. UPPER COWL | 64102-MEL-A20 | - | ZA | ZB | ZC | | | F-40-7 | 2 |
| 45 | STRIPE, UPPER COWL | 64101-MEL-A20 | - | - | - | ZA | | | F-40-7 | 1 |
| 46 | STRIPE, UPPER COWL | 64101-MEL-D20 | - | ZA | ZB | - | | | F-40-7 | 1 |
| 47 | STRIPE, WINDSCREEN | 64805-MEL-000 | ZA | ZA | ZA | ZA | | | F-40-5 | 1 |
| 48 | STRIPE, WINDSCREEN | 64805-MEL-000 | ZA | ZA | ZA | ZA | | | F-40-7 | 4 |
| 49 | WHEEL SUB ASSY., FR. | 44650-MEL-D20 | ZB | ZB | ZB | ZB | | | F-12 | 7 |
| 50 | WHEEL SUB ASSY., RR. | 42650-MEL-D20 | ZB | ZB | ZB | ZB | | | F-15 | 9 |
| 51 | WINDSCREEN SET | 64250-MEL-000 | ZA | ZA | ZA | ZA | | | F-36-1 | 7 |

CBR1000RR (CBR1000RR7).....E,ED,EK,F,KO

| No. | MODEL | | CBR1000RR7 | | | | | |
|---|---|---|---|---|---|---|---|---|
| | COLOR | | Graphite black | Winning red | Applicable model | | Applicable block No. | Ref.No. |
| | CODE | | NH-B01 | R-258 | | | | |
| | Name of colored parts | Basic part No. | NHB01DA | R258BA | Initial applicable model | Final applicable model | | |
| 1 | BODY SET, FRAME | 50010-MEL-B30 | ZA | ZA | | | F-33 | 2 |
| 2 | BODY SET, FRAME | 50010-MEL-D30 | ZA | ZA | | | F-33 | 2 |
| 3 | CLIP, PANEL FIXING | 91549-MW0-790 | ZA | ZA | | | F-20-4 | 22 |
| 4 | COWL SET, L. MIDDLE | 64350-MEL-D30 | ZA | ZB | | | F-37-1 | 3 |
| 5 | COWL SET, L. UNDER | 64450-MEL-D20 | ZB | ZB | | | F-38-1 | 5 |
| 6 | COWL SET, R. MIDDLE | 64300-MEL-D30 | ZA | ZB | | | F-37-1 | 2 |
| 7 | COWL SET, R. UNDER | 64400-MEL-D20 | ZB | ZB | | | F-38-1 | 4 |
| 8 | COWL SET, RR. SEAT | 77210-MEL-D20 | - | ZB | | | F-19-1 | 2 |
| 9 | COWL SET, RR. SEAT | 77210-MEL-D30 | ZD | - | | | F-19-1 | 2 |
| 10 | COWL SET, UPPER | 64100-MEL-D30 | ZA | ZB | | | F-36-1 | 3 |
| 11 | FENDER COMP., FR. | 61100-MEL-D20 | ZA | ZC | | | F-9 | 1 |
| 12 | MARK, RR. SEAT COWL | 64841-MEL-D20 | - | ZB | | | F-40-6 | 9 |
| 13 | MARK, RR. SEAT COWL | 64841-MEL-D30 | ZA | - | | | F-40-6 | 9 |
| 14 | MARK, RR. SEAT COWL | 64842-MEL-D20 | - | ZB | | | F-40-6 | 10 |
| 15 | MARK, RR. SEAT COWL | 64842-MEL-D30 | ZD | - | | | F-40-6 | 10 |
| 16 | MARK, UNDER COWL | 64819-MEL-D20 | ZB | ZB | | | F-40-6 | 7 |
| 17 | MARK, UNDER COWL | 64825-MEL-D20 | ZB | ZB | | | F-40-6 | 8 |
| 18 | RAIL ASSY., SEAT | 50200-MEL-D20 | ZA | ZA | | | F-33 | 12 |
| 19 | SHELTER SET, TOP | 83150-MEL-D20 | - | ZD | | | F-16 | 5 |
| 20 | SHELTER SET, TOP | 83150-MEL-D30 | ZA | - | | | F-16 | 5 |
| 21 | STRIPE A, L. MIDDLE COWL | 64814-MEL-D20 | - | ZA | | | F-40-6 | 4 |
| 22 | STRIPE A, L. MIDDLE COWL | 64814-MEL-D30 | ZA | - | | | F-40-6 | 4 |
| 23 | STRIPE A, L. TOP SHELTER | 64852-MEL-D20 | - | ZA | | | F-40-6 | 12 |
| 24 | STRIPE A, L. TOP SHELTER | 64852-MEL-D30 | ZA | - | | | F-40-6 | 12 |
| 25 | STRIPE A, R. MIDDLE COWL | 64813-MEL-D20 | - | ZA | | | F-40-6 | 3 |
| 26 | STRIPE A, R. MIDDLE COWL | 64813-MEL-D30 | ZA | - | | | F-40-6 | 3 |
| 27 | STRIPE A, R. TOP SHELTER | 64851-MEL-D20 | - | ZA | | | F-40-6 | 11 |
| 28 | STRIPE A, R. TOP SHELTER | 64851-MEL-D30 | ZA | - | | | F-40-6 | 11 |
| 29 | STRIPE B, L. MIDDLE COWL | 64816-MEL-D30 | ZA | ZB | | | F-40-6 | 6 |
| 30 | STRIPE B, L. TOP SHELTER | 64854-MEL-D20 | - | ZA | | | F-40-6 | 14 |

CBR1000RR (CBR1000RR7).....E,ED,EK,F,KO

| No. | MODEL | | CBR1000RR7 | | | | | |
|---|---|---|---|---|---|---|---|---|
| | COLOR | | Graphite black | Winning red | Applicable model | | Applicable block No. | Ref.No. |
| | CODE | | NH-B01 | R-258 | | | | |
| | Name of colored parts | Basic part No. | NHB01DA | R258BA | Initial applicable model | Final applicable model | | |
| 31 | STRIPE B, L. TOP SHELTER | 64854-MEL-D30 | ZA | - | | | F-40-6 | 14 |
| 32 | STRIPE B, R. MIDDLE COWL | 64815-MEL-D30 | ZA | ZB | | | F-40-6 | 5 |
| 33 | STRIPE B, R. TOP SHELTER | 64853-MEL-D20 | - | ZA | | | F-40-6 | 13 |
| 34 | STRIPE B, R. TOP SHELTER | 64853-MEL-D30 | ZA | - | | | F-40-6 | 13 |
| 35 | STRIPE, UPPER COWL | 64101-MEL-D30 | ZA | ZB | | | F-40-6 | 1 |
| 36 | STRIPE, WINDSCREEN | 64805-MEL-000 | ZA | ZA | | | F-40-6 | 2 |
| 37 | WHEEL SUB ASSY., FR. | 44650-MEL-D20 | ZC | ZC | | | F-12 | 7 |
| 38 | WHEEL SUB ASSY., RR. | 42650-MEL-D20 | ZC | ZC | | | F-15 | 9 |
| 39 | WINDSCREEN SET | 64250-MEL-000 | ZA | ZA | | | F-36-1 | 7 |

CBR1000RR (CBR1000RR7).....BR

| No. | MODEL | | CBR1000RR7 | | | | | |
|---|---|---|---|---|---|---|---|---|
| | COLOR | | Graphite black | Winning red | Applicable model | | Applicable block No. | Ref.No. |
| | CODE | | NH-B01 | R-258 | | | | |
| | Name of colored parts | Basic part No. | NHB01DB | R258BB | Initial applicable model | Final applicable model | | |
| 1 | BODY SET, FRAME | 50010-MEL-B30 | ZA | ZA | | | F-33 | 2 |
| 2 | CLIP, PANEL FIXING | 91549-MW0-790 | ZA | ZA | | | F-20-4 | 22 |
| 3 | COWL SET, L. MIDDLE | 64350-MEL-B30 | ZA | ZB | | | F-37-1 | 3 |
| 4 | COWL SET, L. UNDER | 64450-MEL-D20 | ZB | ZB | | | F-38-1 | 5 |
| 5 | COWL SET, R. MIDDLE | 64300-MEL-B30 | ZA | ZB | | | F-37-1 | 2 |
| 6 | COWL SET, R. UNDER | 64400-MEL-D20 | ZB | ZB | | | F-38-1 | 4 |
| 7 | COWL SET, RR. SEAT | 77210-MEL-D20 | - | ZB | | | F-19-1 | 2 |
| 8 | COWL SET, RR. SEAT | 77210-MEL-D30 | ZA | - | | | F-19-1 | 2 |
| 9 | COWL SET, UPPER | 64100-MEL-A30 | ZA | ZB | | | F-36-1 | 2 |
| 10 | FENDER COMP., FR. | 61100-MEL-D20 | ZA | ZC | | | F-9 | 1 |
| 11 | MARK, RR. SEAT COWL | 64841-MEL-D20 | - | ZB | | | F-40-7 | 11 |
| 12 | MARK, RR. SEAT COWL | 64841-MEL-D30 | ZA | - | | | F-40-7 | 11 |
| 13 | MARK, RR. SEAT COWL | 64842-MEL-D20 | - | ZB | | | F-40-7 | 12 |
| 14 | MARK, RR. SEAT COWL | 64842-MEL-D30 | ZA | - | | | F-40-7 | 12 |
| 15 | MARK, UNDER COWL | 64819-MEL-D20 | ZB | ZB | | | F-40-7 | 9 |
| 16 | MARK, UNDER COWL | 64825-MEL-D20 | ZB | ZB | | | F-40-7 | 10 |
| 17 | RAIL ASSY., SEAT | 50200-MEL-D20 | ZA | ZA | | | F-33 | 12 |
| 18 | SHELTER SET, TOP | 83150-MEL-D20 | - | ZD | | | F-16 | 5 |
| 19 | SHELTER SET, TOP | 83150-MEL-D30 | ZA | - | | | F-16 | 5 |
| 20 | STRIPE A, L. MIDDLE COWL | 64814-MEL-D20 | - | ZA | | | F-40-7 | 6 |
| 21 | STRIPE A, L. MIDDLE COWL | 64814-MEL-D30 | ZA | - | | | F-40-7 | 6 |
| 22 | STRIPE A, L. TOP SHELTER | 64852-MEL-D20 | - | ZA | | | F-40-7 | 14 |
| 23 | STRIPE A, L. TOP SHELTER | 64852-MEL-D30 | ZA | - | | | F-40-7 | 14 |
| 24 | STRIPE A, R. MIDDLE COWL | 64813-MEL-D20 | - | ZA | | | F-40-7 | 5 |
| 25 | STRIPE A, R. MIDDLE COWL | 64813-MEL-D30 | ZA | - | | | F-40-7 | 5 |
| 26 | STRIPE A, R. TOP SHELTER | 64851-MEL-D20 | - | ZA | | | F-40-7 | 13 |
| 27 | STRIPE A, R. TOP SHELTER | 64851-MEL-D30 | ZA | - | | | F-40-7 | 13 |
| 28 | STRIPE B, L. MIDDLE COWL | 64816-MEL-A30 | ZA | ZB | | | F-40-7 | 8 |
| 29 | STRIPE B, L. TOP SHELTER | 64854-MEL-D20 | - | ZA | | | F-40-7 | 16 |
| 30 | STRIPE B, L. TOP SHELTER | 64854-MEL-D30 | ZA | - | | | F-40-7 | 16 |

CBR1000RR (CBR1000RR7).....BR

| No. | MODEL | | CBR1000RR7 | | | | | |
|---|---|---|---|---|---|---|---|---|
| | COLOR | | Graphite black | Winning red | Applicable model | | Applicable block No. | Ref.No. |
| | CODE | | NH-B01 | R-258 | | | | |
| | Name of colored parts | Basic part No. | NHB01DB | R258BB | Initial applicable model | Final applicable model | | |
| 31 | STRIPE B, R. MIDDLE COWL | 64815-MEL-A30 | ZA | ZB | | | F-40-7 | 7 |
| 32 | STRIPE B, R. TOP SHELTER | 64853-MEL-D20 | - | ZA | | | F-40-7 | 15 |
| 33 | STRIPE B, R. TOP SHELTER | 64853-MEL-D30 | ZA | - | | | F-40-7 | 15 |
| 34 | STRIPE, L. UPPER COWL | 64103-MEL-A30 | ZA | ZB | | | F-40-7 | 3 |
| 35 | STRIPE, R. UPPER COWL | 64102-MEL-A30 | ZA | ZB | | | F-40-7 | 2 |
| 36 | STRIPE, UPPER COWL | 64101-MEL-D30 | ZA | ZB | | | F-40-7 | 1 |
| 37 | STRIPE, WINDSCREEN | 64805-MEL-000 | ZA | ZA | | | F-40-7 | 4 |
| 38 | WHEEL SUB ASSY., FR. | 44650-MEL-D20 | ZC | ZC | | | F-12 | 7 |
| 39 | WHEEL SUB ASSY., RR. | 42650-MEL-D20 | ZC | ZC | | | F-15 | 9 |
| 40 | WINDSCREEN SET | 64250-MEL-000 | ZA | ZA | | | F-36-1 | 7 |

CBR1000RR (CBR1000RR7).....MX,U

| No. | MODEL | | CBR1000RR7 | | | | | | |
|---|---|---|---|---|---|---|---|---|---|
| | COLOR | | Graphite black | Winning red | Digital silver metallic | Applicable model | | Applicable block No. | Ref.No. |
| | CODE | | NH-B01 | R-258 | NH-A30M | | | | |
| No. | Name of colored parts | Basic part No. | NHB01DB | R258BB | NHA30 | Initial applicable model | Final applicable model | | |
| 1 | BODY SET, FRAME | 50010-MEL-B30 | ZA | ZA | ZA | | | F-33 | 2 |
| 2 | BODY SET, FRAME | 50010-MEL-D30 | ZA | ZA | ZA | | | F-33 | 2 |
| 3 | CLIP, PANEL FIXING | 91549-MW0-790 | ZA | ZA | ZA | | | F-20-4 | 22 |
| 4 | COWL SET, L. MIDDLE | 64350-MEL-A30 | ZA | ZB | ZD | | | F-37-1 | 3 |
| 5 | COWL SET, L. UNDER | 64450-MEL-D20 | ZB | ZB | ZB | | | F-38-1 | 5 |
| 6 | COWL SET, R. MIDDLE | 64300-MEL-A30 | ZA | ZB | ZD | | | F-37-1 | 2 |
| 7 | COWL SET, R. UNDER | 64400-MEL-D20 | ZB | ZB | ZB | | | F-38-1 | 4 |
| 8 | COWL SET, RR. SEAT | 77210-MEL-D30 | ZA | - | ZC | | | F-19-1 | 2 |
| 9 | COWL SET, UPPER | 64100-MEL-A30 | - | - | ZD | | | F-36-1 | 1 |
| 10 | COWL SET, UPPER | 64100-MEL-A30 | ZA | ZB | - | | | F-36-1 | 2 |
| 11 | FENDER COMP., FR. | 61100-MEL-D20 | ZA | ZC | ZF | | | F-9 | 1 |
| 12 | MARK | 64820-MEL-A30 | - | - | ZA | | | F-40-5 | 4 |
| 13 | MARK, DRIVE CAUTION | 87560-MM5-900 | ZA | ZA | ZA | | | F-39 | 8 |
| 14 | MARK, L. TOP SHELTER | 64856-MEL-A30 | - | - | ZA | | | F-40-5 | 10 |
| 15 | MARK, MIDDLE COWL | 64811-MEL-A30 | - | - | ZA | | | F-40-5 | 2 |
| 16 | MARK, R. TOP SHELTER | 64855-MEL-A30 | - | - | ZA | | | F-40-5 | 9 |
| 17 | MARK, RR. SEAT COWL | 64841-MEL-D20 | - | ZB | - | | | F-40-7 | 11 |
| 18 | MARK, RR. SEAT COWL | 64841-MEL-D30 | - | - | ZC | | | F-40-5 | 7 |
| 19 | MARK, RR. SEAT COWL | 64841-MEL-D30 | ZA | - | - | | | F-40-7 | 11 |
| 20 | MARK, RR. SEAT COWL | 64842-MEL-D20 | - | ZB | - | | | F-40-7 | 12 |
| 21 | MARK, RR. SEAT COWL | 64842-MEL-D30 | - | - | ZC | | | F-40-5 | 8 |
| 22 | MARK, RR. SEAT COWL | 64842-MEL-D30 | ZA | - | - | | | F-40-7 | 12 |
| 23 | MARK, UNDER COWL | 64819-MEL-D20 | - | - | ZB | | | F-40-5 | 3 |
| 24 | MARK, UNDER COWL | 64819-MEL-D20 | ZB | ZB | - | | | F-40-7 | 9 |
| 25 | MARK, UNDER COWL | 64825-MEL-D20 | - | - | ZB | | | F-40-5 | 6 |
| 26 | MARK, UNDER COWL | 64825-MEL-D20 | ZB | ZB | - | | | F-40-7 | 10 |
| 27 | RAIL ASSY., SEAT | 50200-MEL-D20 | ZA | ZA | ZA | | | F-33 | 12 |
| 28 | SHELTER SET, TOP | 83150-MEL-A20 | - | ZB | - | | | F-16 | 6 |
| 29 | SHELTER SET, TOP | 83150-MEL-A30 | ZA | - | ZC | | | F-16 | 6 |
| 30 | STRIPE A, L. MIDDLE COWL | 64814-MEL-D20 | - | ZA | - | | | F-40-7 | 6 |

CBR1000RR (CBR1000RR7).....MX,U

| No. | MODEL | | CBR1000RR7 | | | | | | |
|---|---|---|---|---|---|---|---|---|---|
| | COLOR | | Graphite black | Winning red | Digital silver metallic | Applicable model | | Applicable block No. | Ref.No. |
| | CODE | | NH-B01 | R-258 | NH-A30M | | | | |
| No. | Name of colored parts | Basic part No. | NHB01DB | R258BB | NHA30 | Initial applicable model | Final applicable model | | |
| 31 | STRIPE A, L. MIDDLE COWL | 64814-MEL-D30 | ZA | - | - | | | F-40-7 | 6 |
| 32 | STRIPE A, L. TOP SHELTER | 64852-MEL-D20 | - | ZA | - | | | F-40-7 | 14 |
| 33 | STRIPE A, L. TOP SHELTER | 64852-MEL-D30 | ZA | - | - | | | F-40-7 | 14 |
| 34 | STRIPE A, R. MIDDLE COWL | 64813-MEL-D20 | - | ZA | - | | | F-40-7 | 5 |
| 35 | STRIPE A, R. MIDDLE COWL | 64813-MEL-D30 | ZA | - | - | | | F-40-7 | 5 |
| 36 | STRIPE A, R. TOP SHELTER | 64851-MEL-D20 | - | ZA | - | | | F-40-7 | 13 |
| 37 | STRIPE A, R. TOP SHELTER | 64851-MEL-D30 | ZA | - | - | | | F-40-7 | 13 |
| 38 | STRIPE B, L. MIDDLE COWL | 64816-MEL-A30 | ZA | ZB | - | | | F-40-7 | 8 |
| 39 | STRIPE B, L. TOP SHELTER | 64854-MEL-D20 | - | ZA | - | | | F-40-7 | 16 |
| 40 | STRIPE B, L. TOP SHELTER | 64854-MEL-D30 | ZA | - | - | | | F-40-7 | 16 |
| 41 | STRIPE B, R. MIDDLE COWL | 64815-MEL-A30 | ZA | ZB | - | | | F-40-7 | 7 |
| 42 | STRIPE B, R. TOP SHELTER | 64853-MEL-D20 | - | ZA | - | | | F-40-7 | 15 |
| 43 | STRIPE B, R. TOP SHELTER | 64853-MEL-D30 | ZA | - | - | | | F-40-7 | 15 |
| 44 | STRIPE, L. UPPER COWL | 64103-MEL-A30 | ZA | ZB | - | | | F-40-7 | 3 |
| 45 | STRIPE, R. UPPER COWL | 64102-MEL-A30 | ZA | ZB | - | | | F-40-7 | 2 |
| 46 | STRIPE, UPPER COWL | 64101-MEL-D30 | ZA | ZB | - | | | F-40-7 | 1 |
| 47 | STRIPE, WINDSCREEN | 64805-MEL-000 | - | - | ZA | | | F-40-5 | 1 |
| 48 | STRIPE, WINDSCREEN | 64805-MEL-000 | ZA | ZA | - | | | F-40-7 | 4 |
| 49 | WHEEL SUB ASSY., FR. | 44650-MEL-D20 | ZC | ZC | ZC | | | F-12 | 7 |
| 50 | WHEEL SUB ASSY., RR. | 42650-MEL-D20 | ZC | ZC | ZC | | | F-15 | 9 |
| 51 | WINDSCREEN SET | 64250-MEL-000 | ZA | ZA | ZA | | | F-36-1 | 7 |

CBR1000RR (CBR1000RR7).....2ED,2F,3E,4EK

| No. | MODEL | | CBR1000RR7 | | | | |
|---|---|---|---|---|---|---|---|
| | COLOR | | Pearl fadeless white | Applicable model | | Applicable block No. | Ref.No. |
| | CODE | | NH-341P | | | | |
| | Name of colored parts | Basic part No. | NH341KA | Initial applicable model | Final applicable model | | |
| 1 | BODY SET, FRAME | 50010-MEL-D30 | ZA | | | F-33 | 2 |
| 2 | CLIP, PANEL FIXING | 91549-MW0-790 | ZA | | | F-20-4 | 22 |
| 3 | COWL SET, L. MIDDLE | 64350-MEL-D40 | ZA | | | F-37-1 | 3 |
| 4 | COWL SET, L. UNDER | 64450-MEL-D30 | ZB | | | F-38-1 | 5 |
| 5 | COWL SET, R. MIDDLE | 64300-MEL-D40 | ZA | | | F-37-1 | 2 |
| 6 | COWL SET, R. UNDER | 64400-MEL-D30 | ZB | | | F-38-1 | 4 |
| 7 | COWL SET, RR. SEAT | 77210-MEL-D40 | ZA | | | F-19-1 | 2 |
| 8 | COWL SET, UPPER | 64100-MEL-D40 | ZA | | | F-36-1 | 3 |
| 9 | FENDER COMP., FR. | 61100-MEL-D20 | ZC | | | F-9 | 1 |
| 10 | MARK, RR. SEAT COWL | 64841-MEL-D30 | ZD | | | F-40-8 | 15 |
| 11 | MARK, RR. SEAT COWL | 64842-MEL-D30 | ZE | | | F-40-8 | 16 |
| 12 | MARK, TOP SHELTER | 64859-MEL-D40 | ZA | | | F-40-8 | 21 |
| 13 | MARK, UNDER COWL | 64819-MEL-D30 | ZB | | | F-40-8 | 11 |
| 14 | MARK, UNDER COWL | 64825-MEL-D30 | ZB | | | F-40-8 | 14 |
| 15 | RAIL ASSY., SEAT | 50200-MEL-D20 | ZA | | | F-33 | 12 |
| 16 | SHELTER SET, TOP | 83150-MEL-D40 | ZA | | | F-16 | 5 |
| 17 | STRIPE A, L. MIDDLE COWL | 64814-MEL-D40 | ZA | | | F-40-8 | 6 |
| 18 | STRIPE A, L. TOP SHELTER | 64852-MEL-D40 | ZA | | | F-40-8 | 18 |
| 19 | STRIPE A, R. MIDDLE COWL | 64813-MEL-D40 | ZA | | | F-40-8 | 5 |
| 20 | STRIPE A, R. TOP SHELTER | 64851-MEL-D40 | ZA | | | F-40-8 | 17 |
| 21 | STRIPE B, L. MIDDLE COWL | 64816-MEL-D40 | ZA | | | F-40-8 | 8 |
| 22 | STRIPE B, L. TOP SHELTER | 64854-MEL-D40 | ZA | | | F-40-8 | 20 |
| 23 | STRIPE B, R. MIDDLE COWL | 64815-MEL-D40 | ZA | | | F-40-8 | 7 |
| 24 | STRIPE B, R. TOP SHELTER | 64853-MEL-D40 | ZA | | | F-40-8 | 19 |
| 25 | STRIPE C, L. MIDDLE COWL | 64818-MEL-D40 | ZA | | | F-40-8 | 10 |
| 26 | STRIPE C, R. MIDDLE COWL | 64817-MEL-D40 | ZA | | | F-40-8 | 9 |
| 27 | STRIPE D, L. MIDDLE COWL | 64822-MEL-D40 | ZA | | | F-40-8 | 13 |
| 28 | STRIPE D, R. MIDDLE COWL | 64821-MEL-D40 | ZA | | | F-40-8 | 12 |
| 29 | STRIPE, L. RR. SEAT COWL | 64244-MEL-D40 | ZA | | | F-40-8 | 3 |
| 30 | STRIPE, R. RR. SEAT COWL | 64243-MEL-D40 | ZA | | | F-40-8 | 2 |

CBR1000RR (CBR1000RR7).....2ED,2F,3E,4EK

| No. | MODEL | | CBR1000RR7 | | | | |
|---|---|---|---|---|---|---|---|
| | COLOR | | Pearl fadeless white | Applicable model | | Applicable block No. | Ref.No. |
| | CODE | | NH-341P | | | | |
| | Name of colored parts | Basic part No. | NH341KA | Initial applicable model | Final applicable model | | |
| 31 | STRIPE, UPPER COWL | 64101-MEL-D40 | ZA | | | F-40-8 | 1 |
| 32 | STRIPE, WINDSCREEN | 64805-MEL-D40 | ZA | | | F-40-8 | 4 |
| 33 | WINDSCREEN SET | 64250-MEL-D40 | ZA | | | F-36-1 | 7 |

# Fuel hose, general purpose hoses and vinyl hose

- The standard part fuel hose, general purpose hose and vinyl hose may be substituted by the coiled bulk part.
- When ordering the standard part fuel hose, general purpose hose and vinyl hose use the bulk part number written in the parts catalogue in brackets ( ) underneath the part name, or use the catalogue below.
  (The bulk part standard length is 1 m, however, those displayed in the catalogue < > are available in 3 m and 8 m lengths.)
- When exchanging the hose, cut and use at the specified length as mentioned in the part name.
  (For the method of cutting the bulk part, and method of filling out orders etc., please refer to the service manual and the instructions issued with the bulk part.)

- The list below is a catalogue of the standard part numbers and bulk part numbers. Note that those numbers are applicable to the listed replacement parts only.

| Fuel hoses/Tubes | | | |
|---|---|---|---|
| Standard part No. | Bulk part No. | Bulk part | |
| | | Inner diameter (mm) | Length (m) |
| 95001-30xxx-2x | 95001-30001-20M | 3.0 | 1 |
| 95001-30xxx-3x | 95001-30001-30M | 3.0 | 1 |
| 95001-30xxx-4x | 95001-30001-40M | 3.0 | 1 |
| 95001-35xxx-2x | 95001-35001-50M<br><95001-35003-50M> | 3.5 | 1<br>3 |
| 95001-35xxx-3x | 95001-35001-60M<br><95001-35003-60M> | 3.5 | 1<br>3 |
| 95001-35xxx-4x | 95001-35001-60M<br><95001-35003-60M> | 3.5 | 1<br>3 |
| 95001-35xxx-5x | 95001-35001-50M<br><95001-35003-50M> | 3.5 | 1<br>3 |
| 95001-35xxx-6x | 95001-35001-60M<br><95001-35003-60M> | 3.5 | 1<br>3 |
| 95001-45xxx-2x | 95001-45001-50M<br><95001-45003-50M> | 4.5 | 1<br>3 |
| 95001-45xxx-3x | 95001-45001-60M<br><95001-45003-60M><br><95001-45008-60M> | 4.5 | 1<br>3<br>8 |
| 95001-45xxx-4x | 95001-45001-60M<br><95001-45003-60M><br><95001-45008-60M> | 4.5 | 1<br>3<br>8 |
| 95001-45xxx-5x | 95001-45001-50M<br><95001-45003-50M> | 4.5 | 1<br>3 |
| 95001-45xxx-6x | 95001-45001-60M<br><95001-45003-60M><br><95001-45008-60M> | 4.5 | 1<br>3<br>8 |
| 95001-55xxx-2x | 95001-55001-50M<br><95001-55003-50M><br><95001-55008-50M> | 5.5 | 1<br>3<br>8 |

| Fuel hoses/Tubes | | | |
|---|---|---|---|
| Standard part No. | Bulk part No. | Bulk part | |
| | | Inner diameter (mm) | Length (m) |
| 95001-55xxx-3x | 95001-55001-60M<br><95001-55003-60M><br><95001-55008-60M> | 5.5 | 1<br>3<br>8 |
| 95001-55xxx-4x | 95001-55001-60M<br><95001-55003-60M><br><95001-55008-60M> | 5.5 | 1<br>3<br>8 |
| 95001-55xxx-5x | 95001-55001-50M<br><95001-55003-50M><br><95001-55008-50M> | 5.5 | 1<br>3<br>8 |
| 95001-55xxx-6x | 95001-55001-60M<br><95001-55003-60M><br><95001-55008-60M> | 5.5 | 1<br>3<br>8 |
| 95001-75xxx-2x | 95001-75001-50M<br><95001-75003-50M> | 7.5 | 1<br>3 |
| 95001-75xxx-3x | 95001-75001-60M<br><95001-75003-60M><br><95001-75008-60M> | 7.5 | 1<br>3<br>8 |
| 95001-75xxx-4x | 95001-75001-60M<br><95001-75003-60M><br><95001-75008-60M> | 7.5 | 1<br>3<br>8 |
| 95001-75xxx-5x | 95001-75001-50M<br><95001-75003-50M> | 7.5 | 1<br>3 |
| 95001-75xxx-6x | 95001-75001-60M<br><95001-75003-60M><br><95001-75008-60M> | 7.5 | 1<br>3<br>8 |
| 95001-80xxx-2x | 95001-80001-50M | 8.0 | 1 |
| 95001-80xxx-3x | 95001-80001-60M | 8.0 | 1 |
| 95001-80xxx-4x | 95001-80001-60M | 8.0 | 1 |
| 95001-80xxx-5x | 95001-80001-50M | 8.0 | 1 |
| 95001-80xxx-6x | 95001-80001-60M | 8.0 | 1 |

| Vinyl tube | | | | |
|---|---|---|---|---|
| Standard part No. | Bulk part No. | Bulk part | | |
| | | Inner dia- meter (mm) | Outer dia-meter (mm) | Length (m) |
| 95003-01xxx-3x | 95003-01001-60M<br><95003-01003-60M> | 2.9 | 6.8 | 1<br>3 |
| 95003-01xxx-60 | 95003-01001-60M<br><95003-01003-60M> | 2.9 | 6.8 | 1<br>3 |
| 95003-03xxx-3x | 95003-03001-60M<br><95003-03003-60M> | 3.0 | 6.0 | 1<br>3 |
| 95003-03xxx-60 | 95003-03001-60M<br><95003-03003-60M> | 3.0 | 6.0 | 1<br>3 |
| 95003-05xxx-3x | 95003-05001-60M<br><95003-05003-60M><br><95003-05008-60M> | 3.5 | 6.5 | 1<br>3<br>8 |
| 95003-05xxx-60 | 95003-05001-60M<br><95003-05003-60M><br><95003-05008-60M> | 3.5 | 6.5 | 1<br>3<br>8 |
| 95003-07xxx-1x | 95003-07001-10M<br><95003-07003-10M><br><95003-07008-10M> | 4.0 | 7.0 | 1<br>3<br>8 |
| 95003-07xxx-20 | 95003-07001-10M<br><95003-07003-10M><br><95003-07008-10M> | 4.0 | 7.0 | 1<br>3<br>8 |
| 95003-07xxx-3x | 95003-07001-60M<br><95003-07003-60M><br><95003-07008-60M> | 4.0 | 7.0 | 1<br>3<br>8 |
| 95003-07xxx-60 | 95003-07001-60M<br><95003-07003-60M><br><95003-07008-60M> | 4.0 | 7.0 | 1<br>3<br>8 |
| 95003-07xxx-7x | 95003-07001-70M<br><95003-07003-70M><br><95003-07008-70M> | 4.0 | 7.0 | 1<br>3<br>8 |
| 95003-08xxx-1x | 95003-08001-10M<br><95003-08003-10M><br><95003-08008-10M> | 4.5 | 6.5 | 1<br>3<br>8 |
| 95003-09xxx-3x | 95003-09001-60M<br><95003-09003-60M> | 4.5 | 8.0 | 1<br>3 |
| 95003-09xxx-60 | 95003-09001-60M<br><95003-09003-60M> | 4.5 | 8.0 | 1<br>3 |
| 95003-10xxx-1x | 95003-10001-10M<br><95003-10003-10M> | 5.0 | 8.0 | 1<br>3 |
| 95003-10xxx-20 | 95003-10001-10M<br><95003-10003-10M> | 5.0 | 8.0 | 1<br>3 |
| 95003-10xxx-3x | 95003-10001-60M<br><95003-10003-60M> | 5.0 | 8.0 | 1<br>3 |
| 95003-10xxx-60 | 95003-10001-60M<br><95003-10003-60M> | 5.0 | 8.0 | 1<br>3 |
| 95003-11xxx-3x | 95003-11001-60M<br><95003-11003-60M><br><95003-11008-60M> | 5.0 | 9.0 | 1<br>3<br>8 |
| 95003-11xxx-60 | 95003-11001-60M<br><95003-11003-60M><br><95003-11008-60M> | 5.0 | 9.0 | 1<br>3<br>8 |
| 95003-12xxx-1x | 95003-12001-10M<br><95003-12003-10M><br><95003-12008-10M> | 5.0 | 7.0 | 1<br>3<br>8 |
| 95003-12xxx-20 | 95003-12001-10M<br><95003-12003-10M><br><95003-12008-10M> | 5.0 | 7.0 | 1<br>3<br>8 |

| Vinyl tube | | | | |
|---|---|---|---|---|
| Standard part No. | Bulk part No. | Bulk part | | |
| | | Inner dia- meter (mm) | Outer dia-meter (mm) | Length (m) |
| 95003-14xxx-1x | 95003-14001-10M<br><95003-14003-10M> | 6.0 | 9.0 | 1<br>3 |
| 95003-14xxx-20 | 95003-14001-10M<br><95003-14003-10M> | 6.0 | 9.0 | 1<br>3 |
| 95003-14xxx-3x | 95003-14001-60M<br><95003-14003-60M> | 6.0 | 9.0 | 1<br>3 |
| 95003-17xxx-1x | 95003-17001-10M<br><95003-17003-10M> | 7.0 | 9.0 | 1<br>3 |
| 95003-19xxx-1x | 95003-19001-10M<br><95003-19003-10M><br><95003-19008-10M> | 7.0 | 11.0 | 1<br>3<br>8 |
| 95003-19xxx-20 | 95003-19001-10M<br><95003-19003-10M><br><95003-19008-10M> | 7.0 | 11.0 | 1<br>3<br>8 |
| 95003-19xxx-3x | 95003-19001-60M<br><95003-19003-60M><br><95003-19008-60M> | 7.0 | 11.0 | 1<br>3<br>8 |
| 95003-19xxx-60 | 95003-19001-60M<br><95003-19003-60M><br><95003-19008-60M> | 7.0 | 11.0 | 1<br>3<br>8 |
| 95003-21xxx-1x | 95003-21001-10M<br><95003-21003-10M> | 8.0 | 9.0 | 1<br>3 |
| 95003-21xxx-20 | 95003-21001-10M<br><95003-21003-10M> | 8.0 | 9.0 | 1<br>3 |
| 95003-23xxx-1x | 95003-23001-10M<br><95003-23003-10M> | 8.0 | 12.0 | 1<br>3 |
| 95003-23xxx-20 | 95003-23001-10M<br><95003-23003-10M> | 8.0 | 12.0 | 1<br>3 |
| 95003-23xxx-3x | 95003-23001-60M<br><95003-23003-60M><br><95003-23008-60M> | 8.0 | 12.0 | 1<br>3<br>8 |
| 95003-23xxx-60 | 95003-23001-60M<br><95003-23003-60M><br><95003-23008-60M> | 8.0 | 12.0 | 1<br>3<br>8 |
| 95003-25xxx-1x | 95003-25001-10M<br><95003-25003-10M> | 9.0 | 11.0 | 1<br>3 |
| 95003-25xxx-20 | 95003-25001-10M<br><95003-25003-10M> | 9.0 | 11.0 | 1<br>3 |
| 95003-25xxx-3x | 95003-25001-60M<br><95003-25003-60M> | 9.0 | 11.0 | 1<br>3 |
| 95003-25xxx-7x | 95003-25001-70M<br><95003-25003-70M> | 9.0 | 11.0 | 1<br>3 |
| 95003-27xxx-1x | 95003-27001-10M<br><95003-27003-10M> | 9.0 | 13.0 | 1<br>3 |
| 95003-27xxx-20 | 95003-27001-10M<br><95003-27003-10M> | 9.0 | 13.0 | 1<br>3 |
| 95003-27xxx-3x | 95003-27001-60M<br><95003-27003-60M> | 9.0 | 13.0 | 1<br>3 |
| 95003-27xxx-60 | 95003-27001-60M<br><95003-27003-60M> | 9.0 | 13.0 | 1<br>3 |
| 95003-33xxx-1x | 95003-33001-10M<br><95003-33003-10M> | 10.0 | 14.0 | 1<br>3 |
| 95003-33xxx-20 | 95003-33001-10M<br><95003-33003-10M> | 10.0 | 14.0 | 1<br>3 |

| Vinyl tube | | | | |
|---|---|---|---|---|
| Standard part No. | Bulk part No. | Bulk part | | |
| | | Inner dia- meter (mm) | Outer dia-meter (mm) | Length (m) |
| 95003-36xxx-1x | 95003-36001-10M<br><95003-36003-10M><br><95003-36008-10M> | 11.0 | 13.0 | 1<br>3<br>8 |
| 95003-36xxx-20 | 95003-36001-10M<br><95003-36003-10M><br><95003-36008-10M> | 11.0 | 13.0 | 1<br>3<br>8 |
| 95003-37xxx-3x | 95003-37001-60M<br>95003-37003-60M> | 11.0 | 15.0 | 1<br>3 |
| 95003-37xxx-60 | 95003-37001-60M<br><95003-37003-60M> | 11.0 | 15.0 | 1<br>3 |
| 95003-38xxx-1x | 95003-38001-10M<br><95003-38003-10M> | 12.0 | 13.0 | 1<br>3 |
| 95003-38xxx-20 | 95003-38001-10M<br><95003-38003-10M> | 12.0 | 13.0 | 1<br>3 |
| 95003-39xxx-1x | 95003-39001-10M<br><95003-39003-10M> | 12.0 | 14.0 | 1<br>3 |
| 95003-39xxx-20 | 95003-39001-10M<br><95003-39003-10M> | 12.0 | 14.0 | 1<br>3 |
| 95003-40xxx-20 | 95003-40001-10M<br><95003-40003-10M> | 12.0 | 16.0 | 1<br>3 |
| 95003-40xxx-3x | 95003-40001-60M<br><95003-40003-60M> | 12.0 | 16.0 | 1<br>3 |
| 95003-40xxx-60 | 95003-40001-60M<br><95003-40003-60M> | 12.0 | 16.0 | 1<br>3 |
| 95003-43xxx-1x | 95003-43001-10M<br><95003-43003-10M><br><95003-43008-10M> | 13.0 | 15.0 | 1<br>3<br>8 |
| 95003-43xxx-20 | 95003-43001-10M<br><95003-43003-10M><br><95003-43008-10M> | 13.0 | 15.0 | 1<br>3<br>8 |
| 95003-45xxx-1x | 95003-45001-10M<br><95003-45003-10M><br><95003-45008-10M> | 14.0 | 18.0 | 1<br>3<br>8 |
| 95003-45xxx-20 | 95003-45001-10M<br><95003-45003-10M><br><95003-45008-10M> | 14.0 | 18.0 | 1<br>3<br>8 |
| 95003-50xxx-1x | 95003-50001-10M<br><95003-50003-10M> | 16.0 | 19.0 | 1<br>3 |
| 95003-50xxx-20 | 95003-50001-10M<br><95003-50003-10M> | 16.0 | 19.0 | 1<br>3 |
| 95003-50xxx-3x | 95003-50001-60M<br><95003-50003-60M> | 16.0 | 19.0 | 1<br>3 |
| 95003-55xxx-1x | 95003-55001-10M<br><95003-55003-10M> | 17.5 | 20.5 | 1<br>3 |
| 95003-55xxx-20 | 95003-55001-10M<br><95003-55003-10M> | 17.5 | 20.5 | 1<br>3 |
| 95003-60xxx-1x | 95003-60001-10M<br><95003-60003-10M> | 22.0 | 27.0 | 1<br>3 |
| 95003-60xxx-20 | 95003-60001-10M<br><95003-60003-10M> | 22.0 | 27.0 | 1<br>3 |
| 95003-60xxx-3x | 95003-60001-60M<br><95003-60003-60M> | 22.0 | 27.0 | 1<br>3 |
| 95003-60xxx-60 | 95003-60001-60M<br><95003-60003-60M> | 22.0 | 27.0 | 1<br>3 |

| General purpose hoses | | | |
|---|---|---|---|
| Standard part No. | Bulk part No. | Bulk part | |
| | | Inner diameter (mm) | Length (m) |
| 95005-11xxx-3x | 95005-11001-30M | 11.0 | 1 |
| 95005-11xxx-5x | 95005-11001-50M | 11.0 | 1 |
| 95005-12xxx-1x | 95005-12001-10M<br><95005-12003-10M> | 12.0 | 1<br>3 |
| 95005-12xxx-2x | 95005-12001-20M | 12.0 | 1 |
| 95005-12xxx-3x | 95005-12001-30M | 12.0 | 1 |
| 95005-12xxx-5x | 95005-12001-50M | 12.0 | 1 |
| 95005-14xxx-1x | 95005-14001-10M | 14.0 | 1 |
| 95005-14xxx-2x | 95005-14001-20M<br><95005-14003-20M> | 14.0 | 1<br>3 |
| 95005-14xxx-3x | 95005-14001-30M | 14.0 | 1 |
| 95005-14xxx-5x | 95005-14001-50M | 14.0 | 1 |
| 95005-17xxx-1x | 95005-17001-10M | 17.0 | 1 |
| 95005-17xxx-2x | 95005-17001-20M | 17.0 | 1 |
| 95005-17xxx-3x | 95005-17001-30M | 17.0 | 1 |
| 95005-17xxx-5x | 95005-17001-50M | 17.0 | 1 |
| 95005-30xxx-3x | 95005-30001-30M | 3.0 | 1 |
| 95005-30xxx-5x | 95005-30001-50M | 3.0 | 1 |
| 95005-35xxx-1x | 95005-35001-10M<br><95005-35003-10M><br><95005-35008-10M> | 3.5 | 1<br>3<br>8 |
| 95005-35xxx-2x | 95005-35001-20M | 3.5 | 1 |
| 95005-35xxx-3x | 95005-35001-30M | 3.5 | 1 |
| 95005-35xxx-4x | 95005-35001-10M<br><95005-35003-10M><br><95005-35008-10M> | 3.5 | 1<br>3<br>8 |
| 95005-35xxx-5x | 95005-35001-50M | 3.5 | 1 |
| 95005-45xxx-1x | 95005-45001-10M<br><95005-45003-10M><br><95005-45008-10M> | 4.5 | 1<br>3<br>8 |
| 95005-45xxx-2x | 95005-45001-20M | 4.5 | 1 |
| 95005-45xxx-3x | 95005-45001-30M | 4.5 | 1 |

| General purpose hoses | | | |
|---|---|---|---|
| Standard part No. | Bulk part No. | Bulk part | |
| | | Inner diameter (mm) | Length (m) |
| 95005-45xxx-4x | 95005-45001-10M<br><95005-45003-10M><br><95005-45008-10M> | 4.5 | 1<br>3<br>8 |
| 95005-45xxx-5x | 95005-45001-50M | 4.5 | 1 |
| 95005-50xxx-3x | 95005-50001-30M<br><95005-50003-30M> | 5.0 | 1<br>3 |
| 95005-50xxx-5x | 95005-50001-50M | 5.0 | 1 |
| 95005-55xxx-1x | 95005-55001-10M<br><95005-55003-10M><br><95005-55008-10M> | 5.3 | 1<br>3<br>8 |
| 95005-55xxx-2x | 95005-55001-20M<br><95005-55003-20M> | 5.3 | 1<br>3 |
| 95005-55xxx-4x | 95005-55001-10M<br><95005-55003-10M><br><95005-55008-10M> | 5.3 | 1<br>3<br>8 |
| 95005-65xxx-1x | 95005-65001-10M<br><95005-65003-10M> | 6.5 | 1<br>3 |
| 95005-65xxx-2x | 95005-65001-20M | 6.5 | 1 |
| 95005-70xxx-3x | 95005-70001-30M<br><95005-70003-30M> | 7.0 | 1<br>3 |
| 95005-70xxx-5x | 95005-70001-50M | 7.0 | 1 |
| 95005-75xxx-1x | 95005-75001-10M<br><95005-75003-10M> | 7.3 | 1<br>3 |
| 95005-75xxx-2x | 95005-75001-20M | 7.3 | 1 |
| 95005-80xxx-1x | 95005-80001-10M<br><95005-80003-10M> | 8.0 | 1<br>3 |
| 95005-80xxx-2x | 95005-80001-20M | 8.0 | 1 |
| 95005-80xxx-3x | 95005-80001-30M | 8.0 | 1 |
| 95005-80xxx-5x | 95005-80001-50M | 8.0 | 1 |
| 95005-91xxx-3x | 95005-91001-30M | 12.0 | 1 |
| 95005-91xxx-5x | 95005-91001-50M | 12.0 | 1 |
| 95005-92xxx-3x | 95005-92001-30M | 12.0 | 1 |
| 95005-92xxx-5x | 95005-92001-50M | 12.0 | 1 |

NOTE: X is displayed to represent the omitted numerals and letters of the roman alphabet.

◎ CAUTION: It is DANGEROUS to confuse the fuel hose with the general purpose hose or vinyl hose.
Never use a general purpose hose or vinyl hose in place of a fuel hose or vice versa. Always use the correct bulk part in the parts catalogue, according to the service manual or the instructions issued with the bulk part.

- Bulk part number of fuel hose, general purpose hose and vinyl hose.

(Example)

9 5 0 0 1 - 7 5 0 0 1 - 5 0 M

**Bulk part number:** Refers to the bulk part.

**Marking code (hose type):** (fuel hose and general purpose hose)

Change code (for added hose): (Vinyl hose)

- Indicates number mark or change sequence, however, the code for the bulk part must be strictly 0 (zero).

**Types of code:**

- Fuel hose
  - 2: Red outside braid (3 mm inside dia. only)
  - 5: Black inside braid
  - 3: Red (3 mm inside dia. only)
  - 4: Ash gray with red stripe (3 mm inside dia. only)
  - 6: Black
- Vinyl hose
  - 1: Clear
  - 2: Black
  - 3: Light red
  - 6: Light red
  - 7: Pale black
- General hose
  - 1: Ash gray
  - 2: Ash gray
  - 3: Black
  - 5: Black

**Lengths:**

- 001: 1 m (standard)
- 003: 3 m
- 008: 8 m

**I.D code:** (fuel hose and general purpose hose)

| | |
|---|---|
| 30: 3.0 mm | 11: 11 mm |
| 35: 3.5 mm | 91: 12 mm (outside dia. 15) mm |
| 45: 4.5 mm | 92: 12 mm (outside dia. 16) mm |
| 50: 5.0 mm | 12: 12 mm (outside dia. 17) mm |
| 55: 5.3 mm, 5.5 mm | 14: 14 mm |
| 65: 6.5 mm | 17: 17 mm |
| 70: 7.0 mm | |
| 75: 7.3 mm, 7.5 mm | |
| 80: 8.0 mm | |

**ID./OD. code:** (vinyl hose)

| | | |
|---|---|---|
| 01: ID. 2.9, OD. 6.8 mm | 14: ID. 6.0, OD. 9.0 mm | 37: ID. 11.0, OD. 15.0 mm |
| 03: ID. 3.0, OD. 6.0 mm | 17: ID. 7.0, OD. 9.0 mm | 38: ID. 12.0, OD. 13.0 mm |
| 05: ID. 3.5, OD. 6.5 mm | 19: ID. 7.0, OD. 11.0 mm | 39: ID. 12.0, OD. 14.0 mm |
| 07: ID. 4.0, OD. 7.0 mm | 21: ID. 8.0, OD. 9.0 mm | 40: ID. 12.0, OD. 16.0 mm |
| 08: ID. 4.5, OD. 6.5 mm | 23: ID. 8.0, OD. 12.0 mm | 43: ID. 13.0, OD. 15.0 mm |
| 09: ID. 4.5, OD. 8.0 mm | 25: ID. 9.0, OD. 11.0 mm | 45: ID. 14.0, OD. 18.0 mm |
| 12: ID. 5.0, OD. 7.0 mm | 27: ID. 9.0, OD. 13.0 mm | 50: ID. 16.0, OD. 19.0 mm |
| 10: ID. 5.0, OD. 8.0 mm | 33: ID. 10.0, OD. 14.0 mm | 55: ID. 17.5, OD. 20.5 mm |
| 11: ID. 5.0, OD. 9.0 mm | 36: ID. 11.0, OD. 13.0 mm | 60: ID. 22.0, OD. 27.0 mm |

**Hose type:**

- 1: Fuel hose
- 3: Vinyl hose
- 5: General hose

## FLAT RATE SERVICE TIME

Flat rate service time (FRT) means the standard time required to service a MC, which is listed in this manual to help the dealers control the actual working process and calculate the service charge by using it as a guide.

FRT setting system

- Net service time
  - Removal, Disassembly/reassembly, Installation
  - Inspection, Measurement, Adjustment, Confirmation
  - Diagnosis/troubleshooting (Electric system)
  - Completion inspection
- Float time
  - Preparation (Process check, Confirmation arrangement for necessary tools)
  - Related work (Transfer of vehicles)

* Float time is set by multiplying the net service time by a given coefficient.

Editorial style

The service items shown in the text are listed with the exchange work time for the repair sales parts as the subject. Other representative service items not using repair parts (removal/installation, adjustment, inspection/measuring, and other work) are listed collectively in the list in the preface, classified according to the work.

FRT setting standard

- Decimal system (in unit of 0.1) is adopted to set FRT as it is convenient to calculate the wage.
  Example: (0.1) → 6 minutes, (0.2) → 12 minutes
  [Labor cost per hour] x [FRT] = [Wage]
- FRT is set with a hand tool.
- Service items and FRT can be subject to change depending on development of tools and service equipment and improvement in service procedure.

Work procedure

- As the work procedure is set with the work time according to the method in the separate Service Manual, refer to this Manual as required.
- Work methods permitting servicing in the shortest time still permitting assurance of safe work and product warranty are used for the setting of service items not listed in the Service Manual.
- Work basically is to be performed by one person, and when two or more people are required, setting is done as the total time for the number of people.
- The set value for the technological level of the workers uses a person with three years of experience in the repair of Honda vehicles as the standard.
- Special tools and service equipment used to set FRT are those specified or recommended in Service Manual.

Service item whose FRT is not presented

- Accessories and service parts that are not listed to use in this manual.
- Locations with little aging deterioration or breakage during normal use.
- Service work that can be finished by one touch.
- Service work that is seldom done (i.e. extremely small causes of trouble and service frequency).

* When FRT is not presented, please calculate wages based on appropriate actual work time

Operation not included of FRT

- Oil and coolant water draining, Waiting time for warming up operation and etc..
- Additional operation that involves removal/installation of standard exterior equipment.
- Indirect time spent for service by visiting the customer, trade-in, and delivery of a MC.
- Indirect time required for ordering and delivery of parts.
- Cost for grease, adhesive agent, etc. used for service work.

Explanation of FRT by using an example
(The example may differ from the actual presented items)

| Ref. No. | L.O.N. | (Relative ref. Number) Description | F.R.T. |
|---|---|---|---|
| ① | | (1, 3, 4, 7) ④ | ② |
| ② | 111118 | CAMSHAFT • • • • • • • • • • • • • • • 4.5 | |
| ③ | | ⑥ | |
| | | • Includes: Valve clearance adjustment | |
| | 111118A | Replace rocker arm add • • • • • • • • • • • • • • • • • • • • • • • • • • 1.0 ⑤ | |

⑦

① Reference No. of the illustration of part that shows location of the replacement work.

② FRT is an abbreviation of Flat Rate Time indicating the standard service time required for the replacement.

③ LON is an abbreviation of Labor Operation Number, and it is a classification of the service items by the work unit code.

The same operation code is used regardless of the models.

Standard operation is indicated with 6 digits code, and additional operation is indicated with 7 digits code.

④ Indicating the camshaft replacement and FRT4.5.

⑤ Indicating FRT1.0 that will be added when additional operation (replace rocker arm) is done in association with camshaft replacement.

⑥ Indicating work contents that are included in the service item.

⑦ Indicating a reference No. whose operation and time are the same as FRT4.5 for the camshaft.

(The application range is limited to the service items without an LON setting within a same block.)

How to refer to the service item by using the sample (camshaft replacement)

Open to the page of the block where the camshaft's spare part illustration is shown.

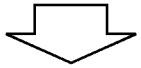

Look for the camshaft illustration, and refer to the service item and FRT that agree with the reference No.

Indication mark for the listing of service items that continues to the following page

| Ref. No. | L.O.N. | (Relative ref. Number) Description | F.R.T. |
|---|---|---|---|
| 2 | 111118 | CAMSHAFT • • • • • • • • • • • • • • • • | 4.5 |
| | • | • | • |
| | • | • | • |
| + | | | |

Mark indicated at the last line.

Indication of the block with no setting of FRT

| Ref. No. | L.O.N. | (Relative ref. Number) Description | F.R.T. |
|---|---|---|---|
| NO INFORMATION • • • • • • • • • • • • • • • • • • • • | | | |

• LON code system

| 1 | 11 | 1 | 18 | A |
|---|---|---|---|---|
| a | b | c | d | e |

a) Category code..... Engine

b) Location/function code ..... Engine upper

c) Operation code..... Replace

d) Operation sequence number (Unit code can be shown with alphabet)
..... camshaft
(No regular rule of code)

e) Additional code ..... replace rocker arm
(No regular rule of code)

| 1 | 11 | 1 | 18 | A |
|---|---|---|---|---|
| a | | c | | |

a) Category codes and classification

| Code | Category |
|---|---|
| 1 | Engine |
| 2 | Transmission |
| 3 | Fuel & Exhaust |
| 4 | Frame & Body |
| 5 | Steering/Suspension |
| 6 | Electrical |
| 7 | Wheels/Brakes |
| 8 | Controls/instrument |
| 9 | - |
| 0 | - |

c) Operation codes and classification

| Code | Operation category |
|---|---|
| 1 | Replace, Removal/Installation, Change |
| 2 | Overhaul |
| 3 | Adjust, Balance |
| 4 | (Paint-related work: Top-coat) |
| 5 | Test, Inspect/diagnose, Measurment, Check |
| 6 | (Overhaul-related work: Rebore) |
| 7 | (Overhaul-related work: Reseal) |
| 8 | (Resurface) |
| 9 | (Paint-related work: Refinish) |
| 0 | Repair, Cleaning, Air bleeding |

Major service items without using spare parts
(1) Removal/Installation, (2) Adjustment, (3) Inspection/Measurement, (4) Overhaul, (5) Other work

E: Engine, F: Frame

* OPERATIONS OTHER THAN REPLACING PARTS

(1) Removal and installation
Set for the configuration with the parts removed from the vehicle.

| | LON | DESCRIPTION | FRT |
|---|---|---|---|
| E | 1101E5 | TILTING ENGINE ASSEMBLY-REMOVAL/INSTALLATION<br>INCLUDES: All necessary adjustment | 3.2 |
| | 1111K0 | CYLINDER HEAD ASSEMBLY-REMOVAL/INSTALLATION<br>INCLUDES: Engine removal and installation | 4.2 |
| | 3111D5 | THROTTLE BODY ASSEMBLY-REMOVAL/INSTALLATION | 1.3 |
| | 1101E6 | CRANKCASE SEPARATION<br>INCLUDES: Engine removal and installation | 5.7 |
| F | | TIRE AND WHEEL-REMOVAL/INSTALLATION<br>NOTE: Tire integrated with wheel. | |
| | 7101D5 | FRONT | 0.4 |
| | 7101D6 | REAR | 0.4 |

(2) Adjustment

| | LON | DESCRIPTION | FRT |
|---|---|---|---|
| E | 3143A0 | ENGINE IDLE-ADJUSTMENT | 0.1 |
| | 3113A2 | STARTER VALVE SYNCHRONIZATION-ADJUSTMENT | 0.8 |
| | 1113A0 | VALVE CLEARANCE-ADJUSTMENT<br>NOTE: For 1 vehicle | 4.3 |
| F | 6163A0 | HEADLIGHT-AIMING | 0.1 |
| | 7103A1 | FRONT WHEEL-BALANCE | 0.7 |
| | 7103A2 | REAR WHEEL-BALANCE | 0.7 |
| | 3113A3 | THROTTLE OPERATION-ADJUSTMENT | 0.1 |

(3) Inspection, Measurement

| | LON | DESCRIPTION | FRT |
|---|---|---|---|
| E | 1115A0 | COMPRESSION PRESSURE-MEASUREMENT | 1.2 |
| | 1135A0 | ENGINE OIL-INSPECTION<br>EXCLUDES: Oil change | 0.1 |
| F | 3135A0 | EXHAUST VALVE CONTROL CABLE-INSPECTION | 0.3 |
| | 3135A0A | '06 model add | 0.1 |
| | 3135A0B | '07 model add | 0.1 |
| | 7115A0 | BRAKE OPERATION-TEST | 0.1 |
| | 6105A0 | BATTERY-CHECKING OF ELECTROLYTE LEVEL & CHARGE | 0.2 |

(5) Other work

| | LON | DESCRIPTION | FRT |
|---|---|---|---|
| E | 1130A2 | OIL STRAINER-CLEANING | 1.4 |
| | 1130A2A | '06 model add | 0.6 |
| | 1130A2D | '07 model add | 0.6 |
| F | 7110A0 | FRONT BRAKE-AIR BLEEDING | 0.2 |
| | 7110A1 | REAR BRAKE-AIR BLEEDING | 0.3 |
| | 1151E7 | RADIATOR COOLANT-CHANGE | 0.5 |

# ENGINE GROUP

D 8

E-1 F 1

CYLINDER HEAD COVER

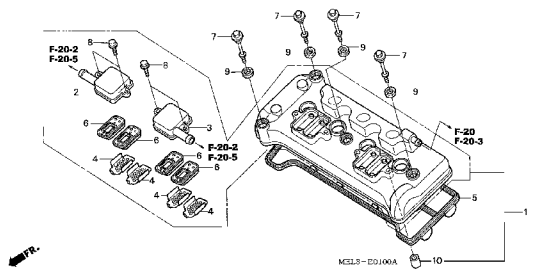


E-2 F 2

CYLINDER HEAD

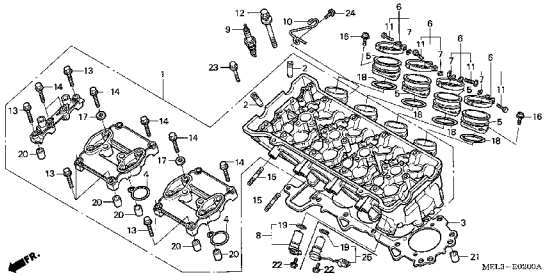


E-3 F 4

CAMSHAFT/VALVE

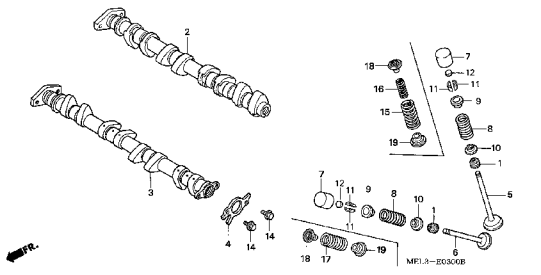


E-4 F 8

CAM CHAIN/TENSIONER

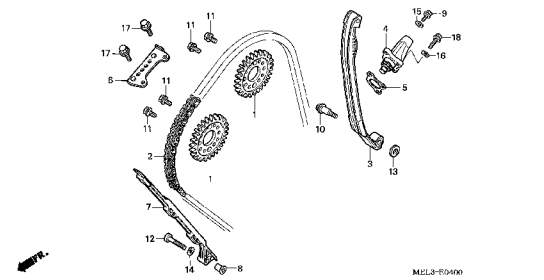


E-5 F 9

RIGHT CRANKCASE COVER

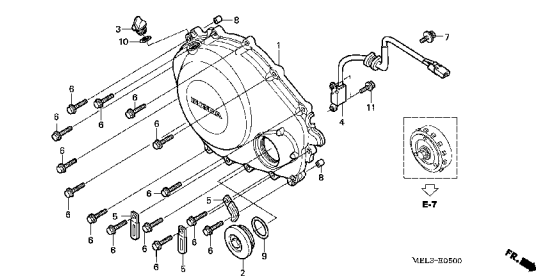


E-6 F10

CLUTCH

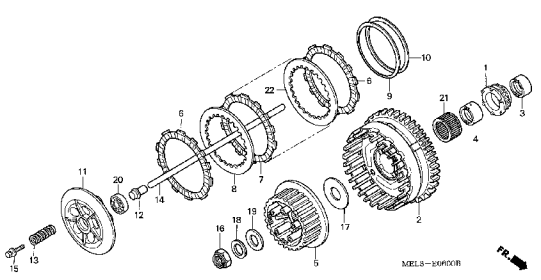


E-7 F13

STARTING CLUTCH

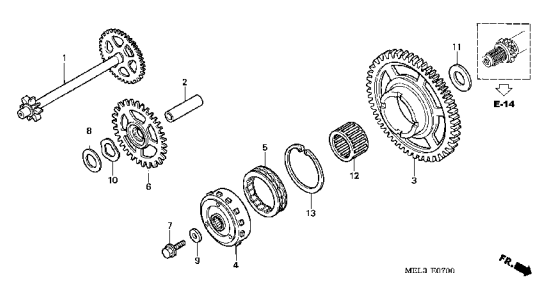


E-8 F14

LEFT CRANKCASE COVER

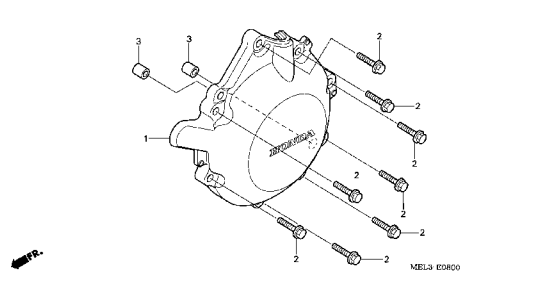


E-9 F15

GENERATOR

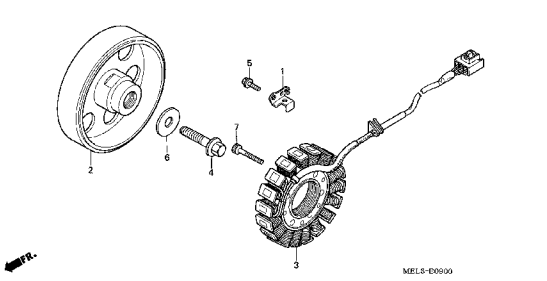


2

# ENGINE GROUP

D 9

E-10 F16

WATER PUMP

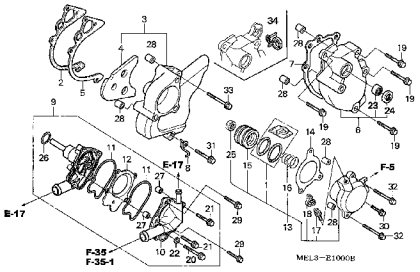


E-11 G 2

STARTING MOTOR

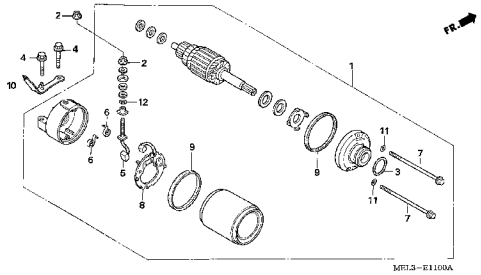


E-12 G 3

OIL PAN/OIL PUMP

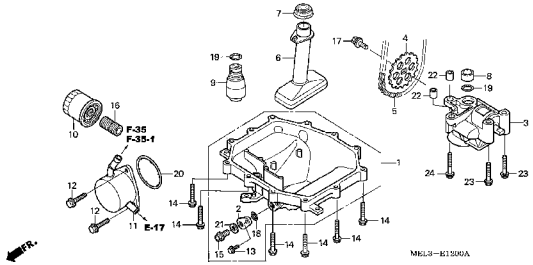


E-13 G 5

CRANKCASE

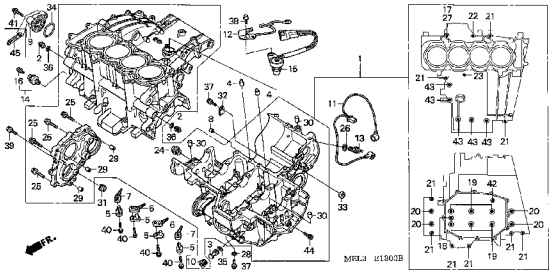


E-14 G 8

CRANKSHAFT/PISTON

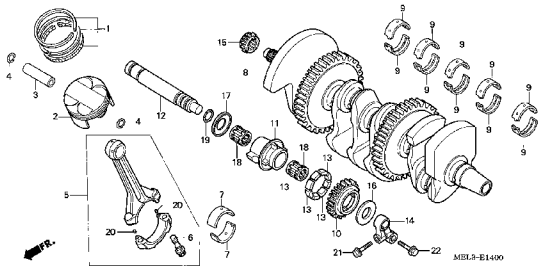


E-15 G10

TRANSMISSION

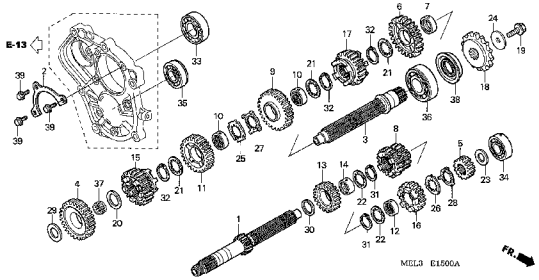


E-16 G13

GEARSHIFT DRUM

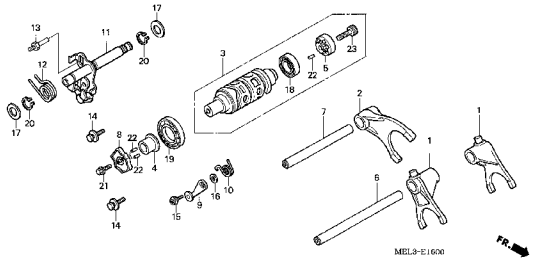


E-17 G15

THERMOSTAT

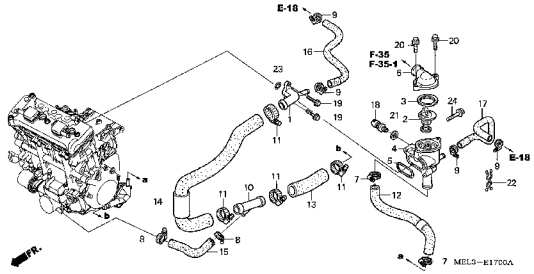


E-18 H 1

THROTTLE BODY

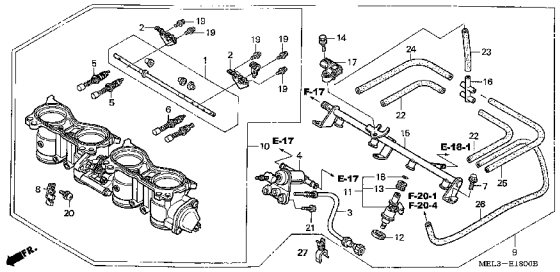


2

E-18-1 H 3

INJECTOR

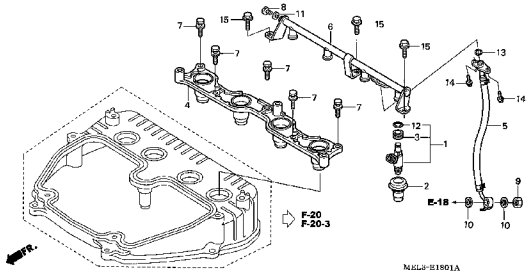


EOP-1 H 4

GASKET KIT A

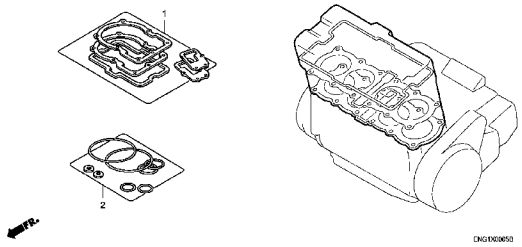


EOP-2 H 5

GASKET KIT B

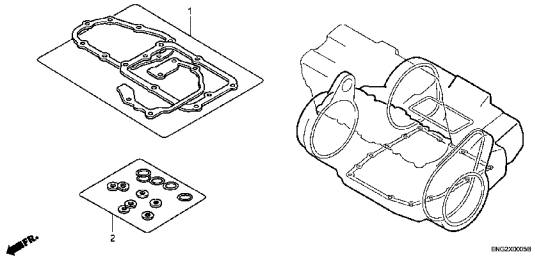


2

# FRAME GROUP

D11

F-1 I 1

HEADLIGHT

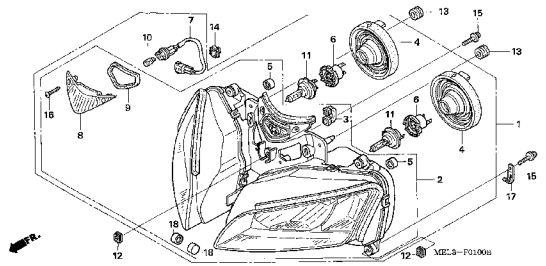


F-2 I 3

METER

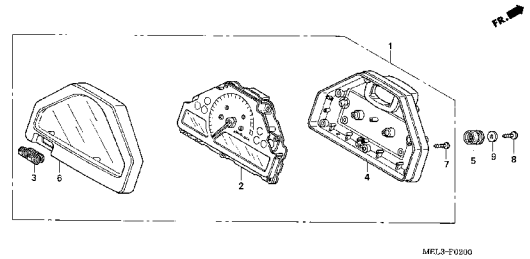


F-3 I 5

SWITCH/CABLE

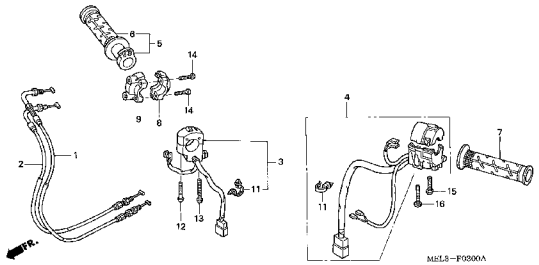


F-4 I 6

FR. BRAKE MASTER CYLINDER

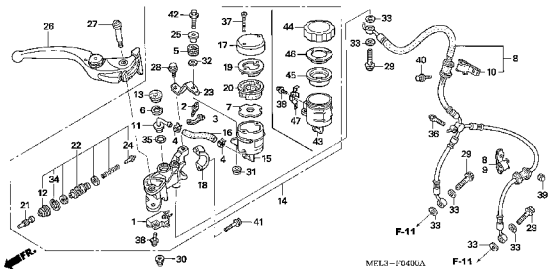


F-5 I 9

CLUTCH MASTER CYLINDER

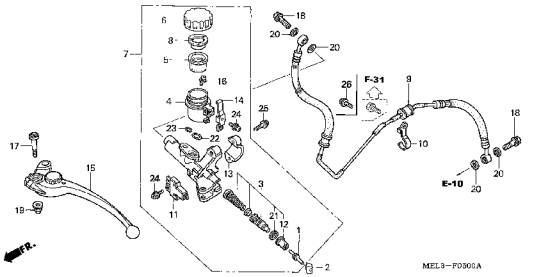


F-6 I11

HANDLE PIPE/TOP BRIDGE

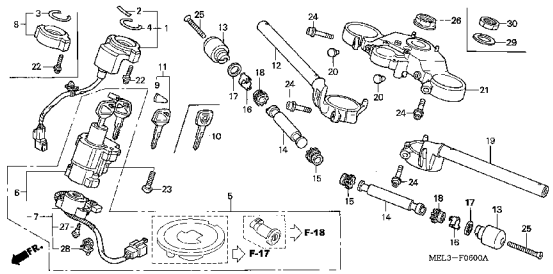


F-7 I14

STEERING DAMPER

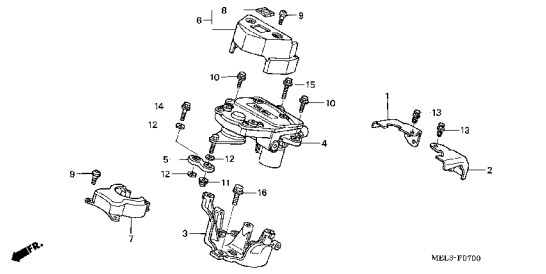


F-8 I15

STEERING STEM

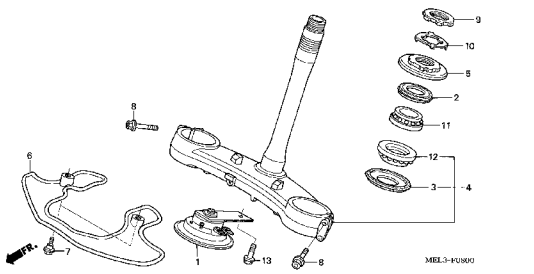


F-9 I16

FRONT FENDER

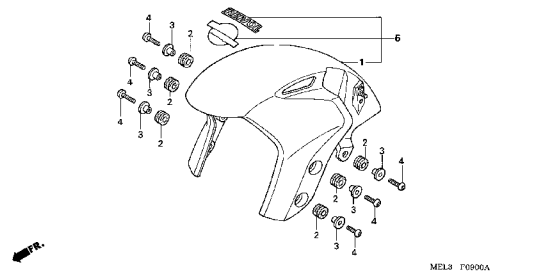


3

# FRAME GROUP

D12

F-10 J 1

FRONT FORK

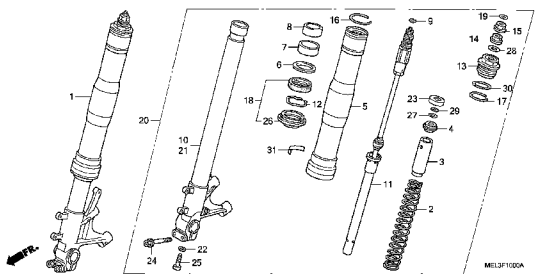

F-11 J 3

FRONT BRAKE CALIPER

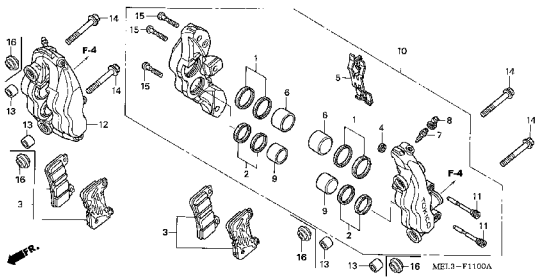

F-12 J 5

FRONT WHEEL

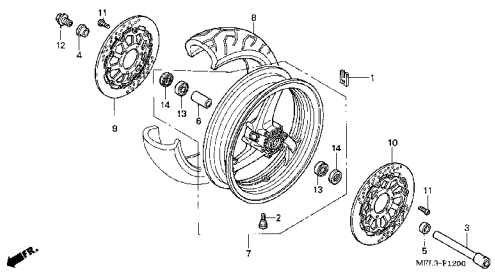

F-13 J 7

REAR BRAKE MASTER CYLINDER

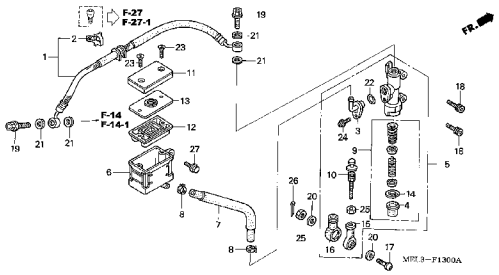

F-14 J 9

REAR BRAKE CALIPER (CBR1000RR4/5)

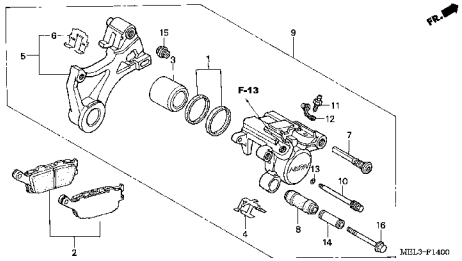

F-14-1 J10

REAR BRAKE CALIPER (CBR1000RR6/7)

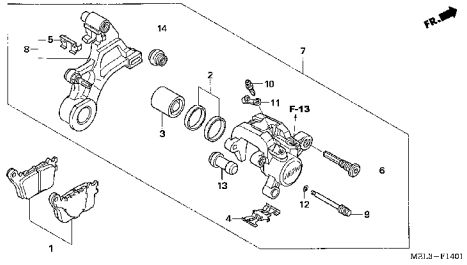

F-15 J11

REAR WHEEL

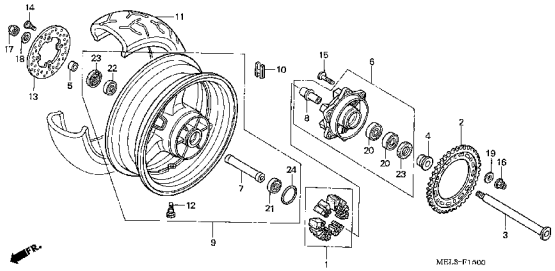

F-16 J13

TOP SHELTER

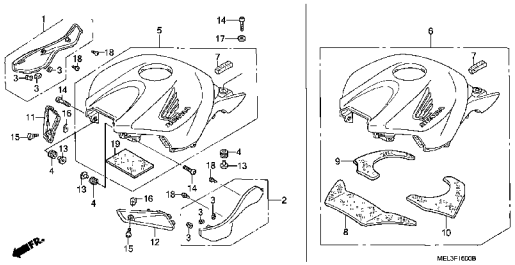

F-17 J15

FUEL TANK/FUEL PUMP

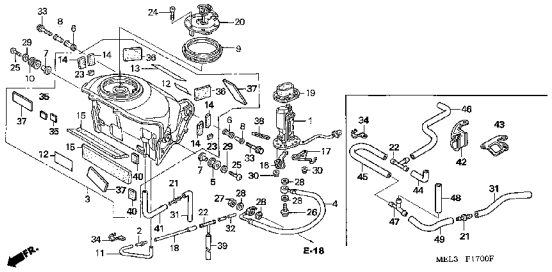

3

# FRAME GROUP

D13

F-18 K 3

SEAT

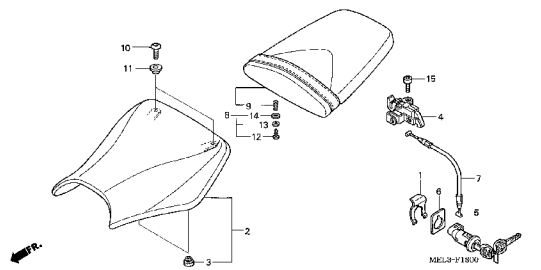


F-19 K 4

SEAT COWL (CBR1000RR4/5)

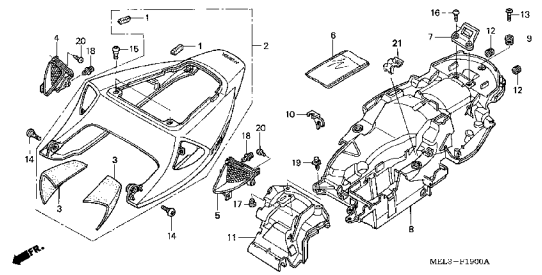


F-19-1 K 6

SEAT COWL (CBR1000RR6/7)

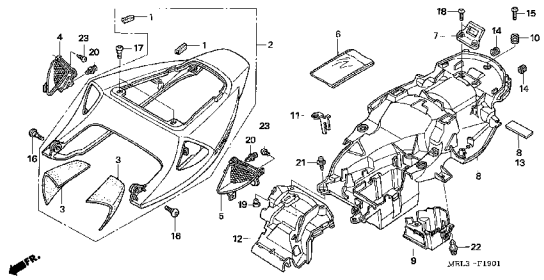


F-20 K 8

AIR CLEANER (CBR1000RR4/5)

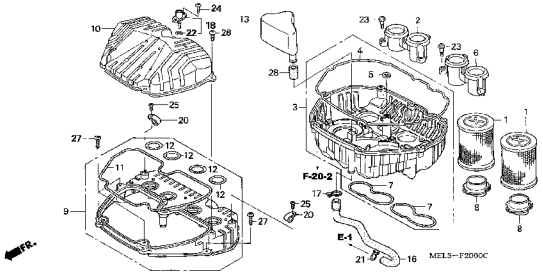


F-20-1 K10

AIR INTAKE DUCT/SOLENOID VALVE (CBR1000RR4/5)

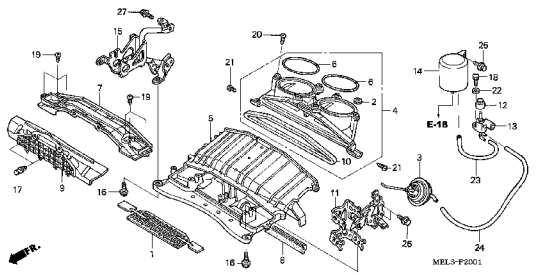


F-20-2 K12

AIR INJECTION CONTROL VALVE (CBR1000RR4/5)

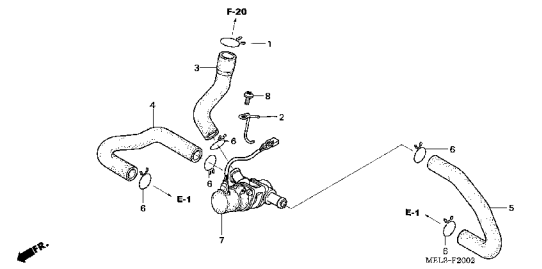


F-20-3 K13

AIR CLEANER (CBR1000RR6/7)

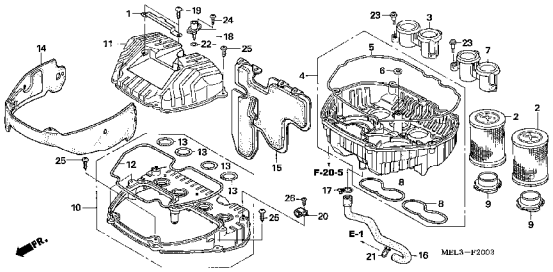


F-20-4 K15

AIR INTAKE DUCT/SOLENOID VALVE (CBR1000RR6/7)

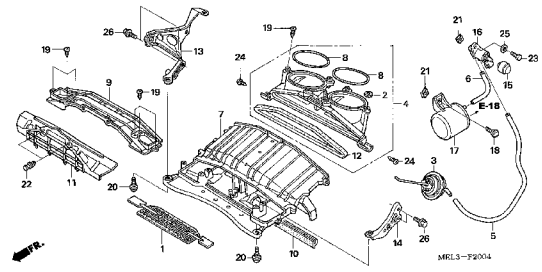


F-20-5 L 1

AIR INJECTION CONTROL VALVE (CBR1000RR6/7)

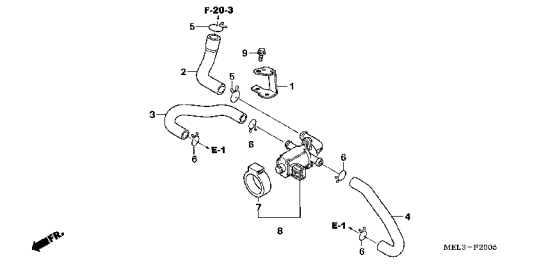


3

# FRAME GROUP

D14

F-21 — L 2

EXHAUST MUFFLER (CBR1000RR4/5)

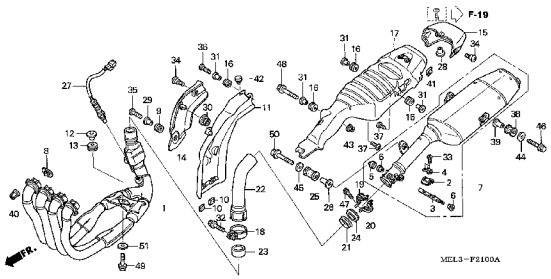


F-21-1 — L 5

EXHAUST MUFFLER (CBR1000RR6/7)

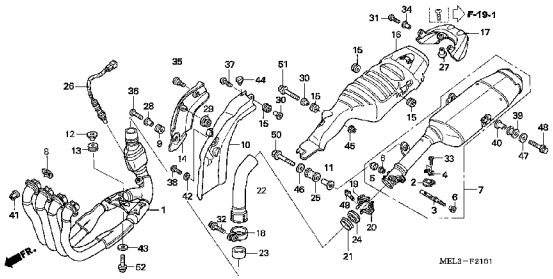


F-22 — L 8

PEDAL

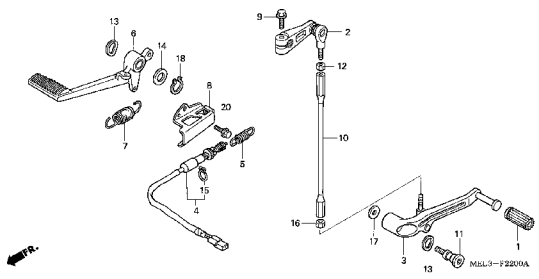


F-23 — L 9

STEP

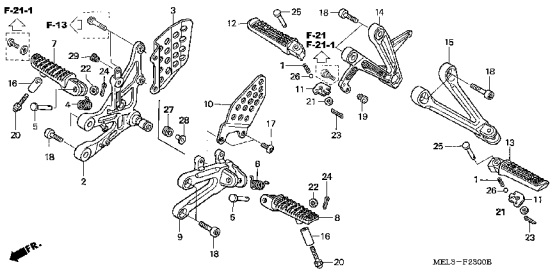


F-24 — L11

STAND

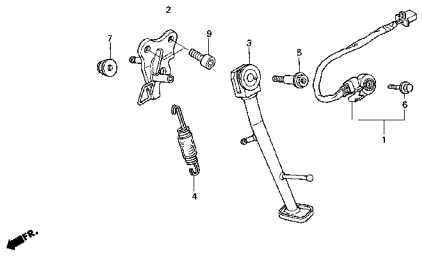


F-25 — L12

SWINGARM

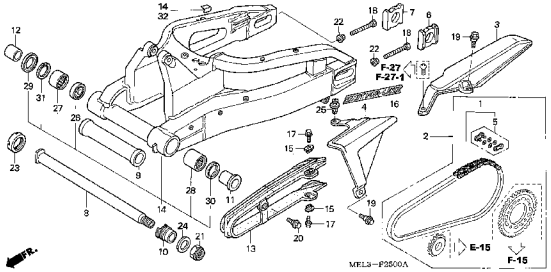


F-26 — L15

REAR CUSHION

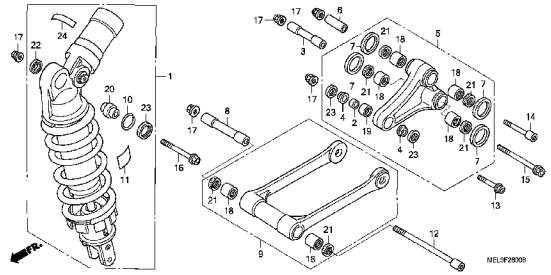


F-27 — M 1

REAR FENDER (CBR1000RR4/5)

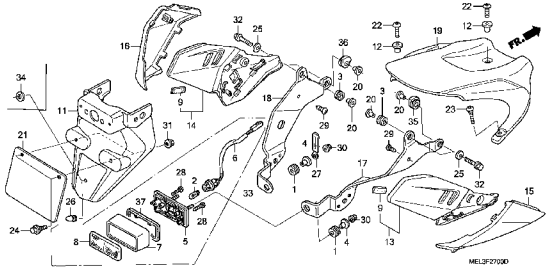


F-27-1 — M 3

REAR FENDER (CBR1000RR6/7)

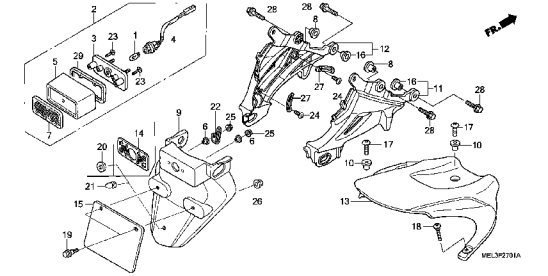


3

# FRAME GROUP

D15

F-28 M 5

WINKER (CBR1000RR4/5)

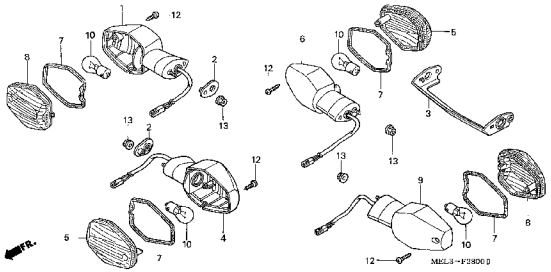

F-28-1 M 6

WINKER (CBR1000RR6/7)

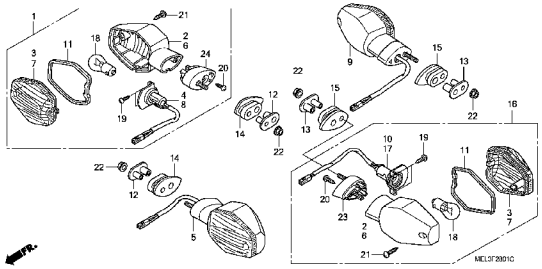

F-29 M 8

TAILLIGHT

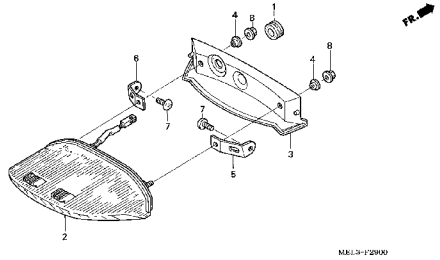

F-30 M 9

BATTERY (CBR1000RR4/5)

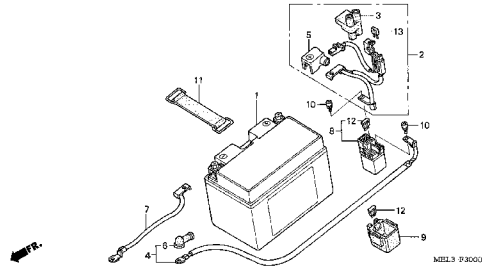

F-30-1 M10

BATTERY (CBR1000RR6/7)

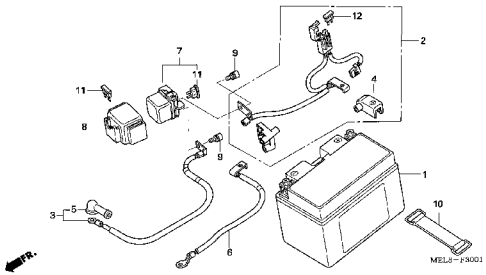

F-31 M11

SERVO MOTOR (CBR1000RR4/5)

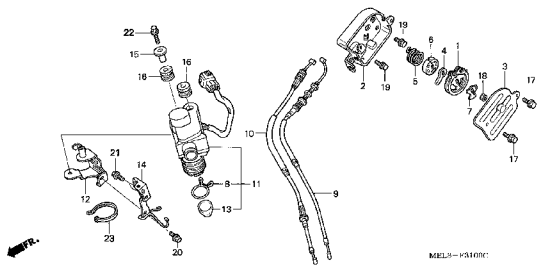

F-31-1 M12

SERVO MOTOR (CBR1000RR6/7)

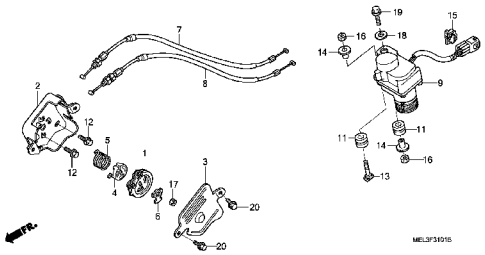

F-32 M13

WIRE HARNESS (CBR1000RR4/5)

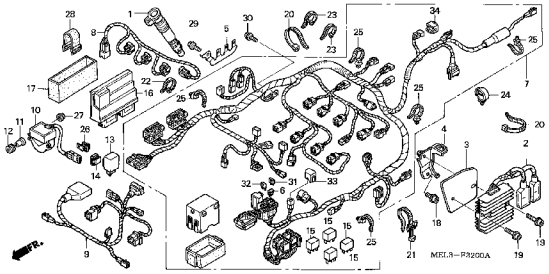

F-32-1 M15

WIRE HARNESS (CBR1000RR6/7)

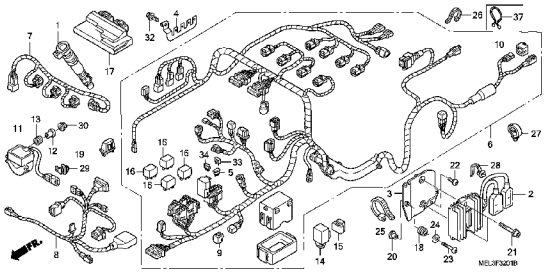

3

# FRAME GROUP

D16

F-33 N 1

FRAME BODY

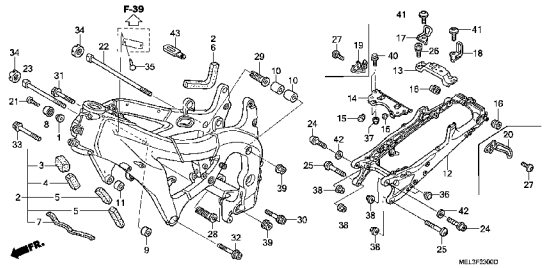


F-34 N 3

TOOLS

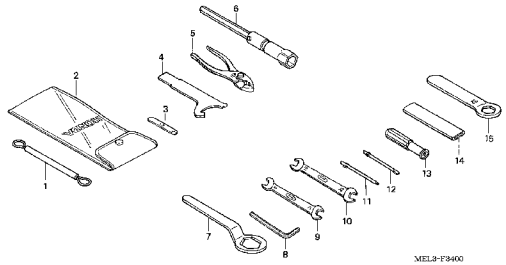


F-35 N 4

RADIATOR (CBR1000RR4/5)

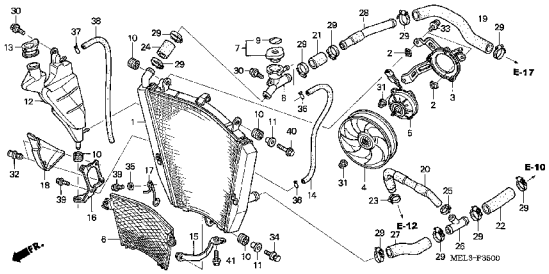


F-35-1 N 6

RADIATOR (CBR1000RR6/7)

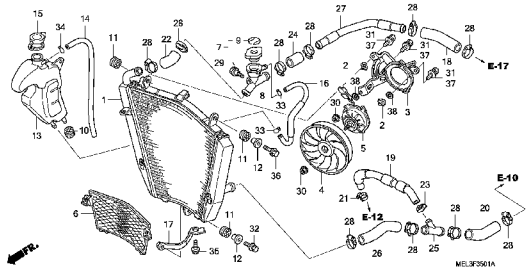


F-36 N 9

UPPER COWL (CBR1000RR4/5)

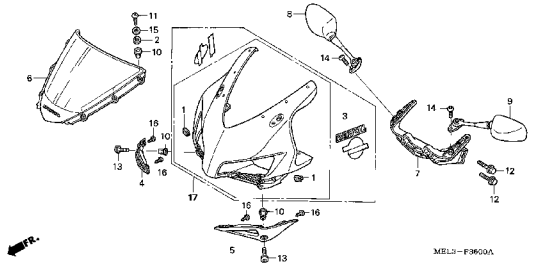


F-36-1 N11

UPPER COWL (CBR1000RR6/7)

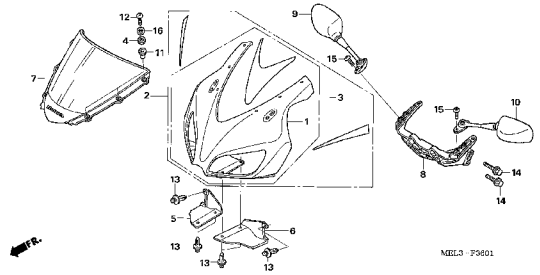


F-37 N13

MIDDLE COWL (CBR1000RR4/5)

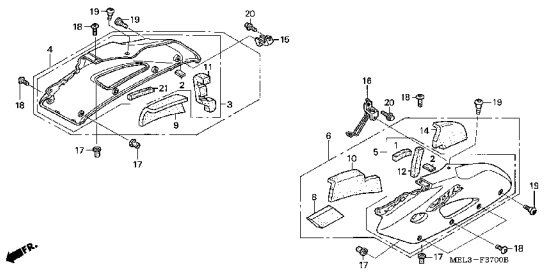


F-37-1 2-B 2

MIDDLE COWL (CBR1000RR6/7)

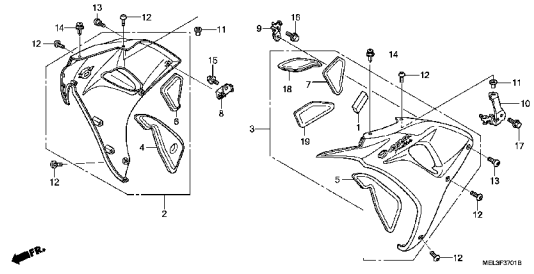


F-38 2-B 5

LOWER COWL (CBR1000RR4/5)

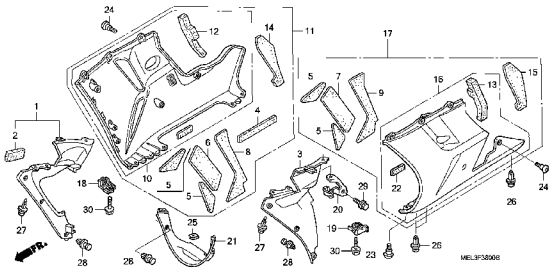


3

# FRAME GROUP

E 1

F-38-1 2-B 7

LOWER COWL (CBR1000RR6/7)

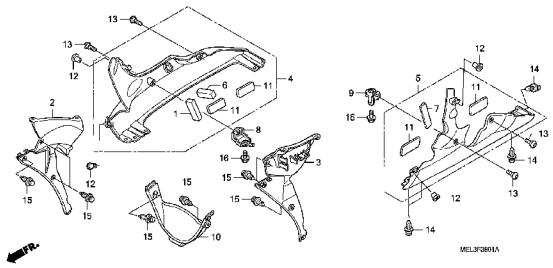


F-39 2-B 8

CAUTION LABEL

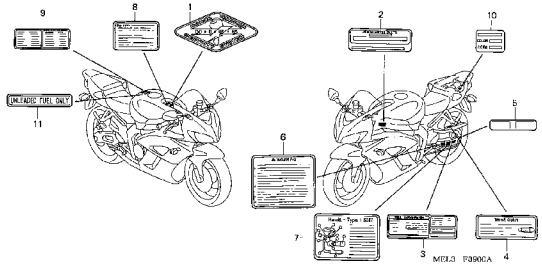


F-40 2-B11

STRIPE/MARK(1)

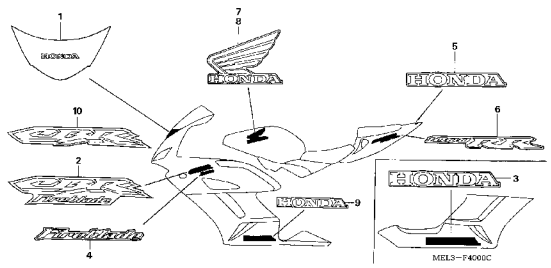


F-40-1 2-B13

STRIPE/MARK(2)

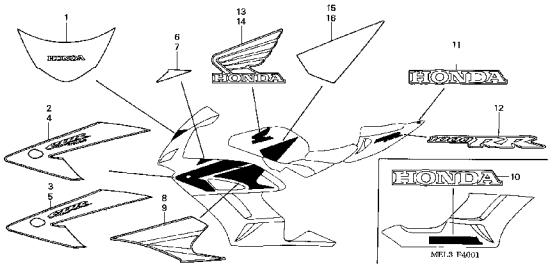


F-40-2 2-B15

STRIPE/MARK(3)

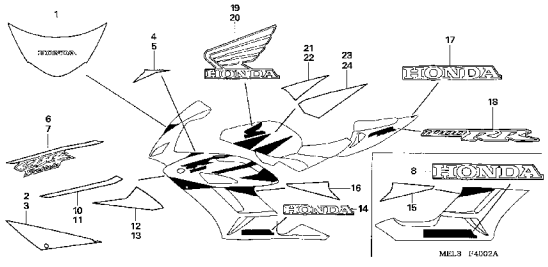


F-40-3 2-C 1

STRIPE/MARK(4)

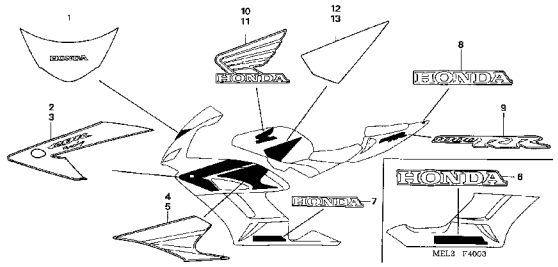


F-40-4 2-C 3

STRIPE/MARK(5)

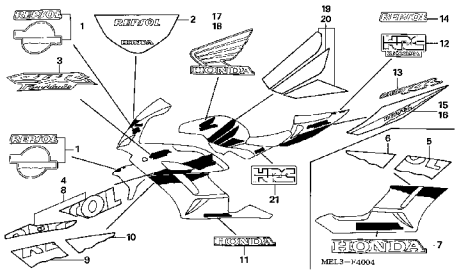


F-40-5 2-C 5

STRIPE/MARK(6)

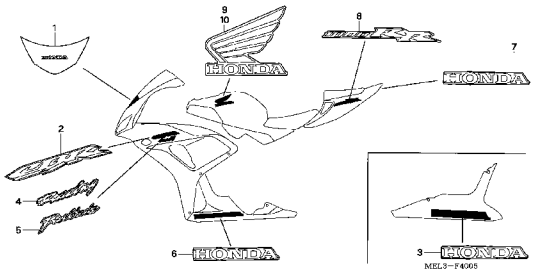


F-40-6 2-C 6

STRIPE/MARK(7)

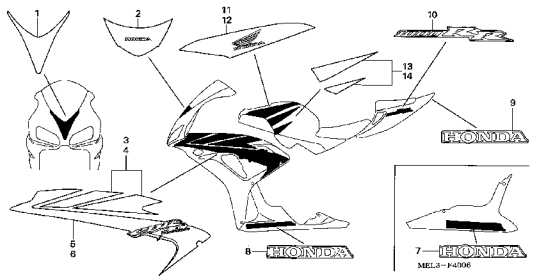


3

F-40-7 2-C 9

STRIPE/MARK(8)

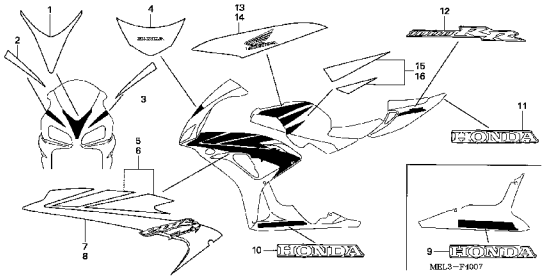


F-40-8 2-C12

STRIPE/MARK(9)

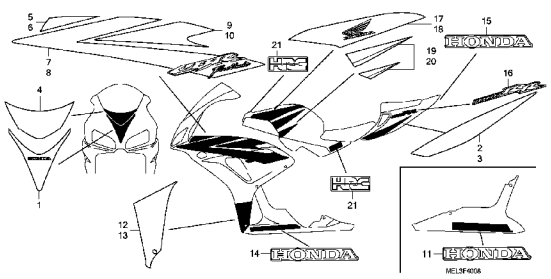

# CYLINDER HEAD COVER



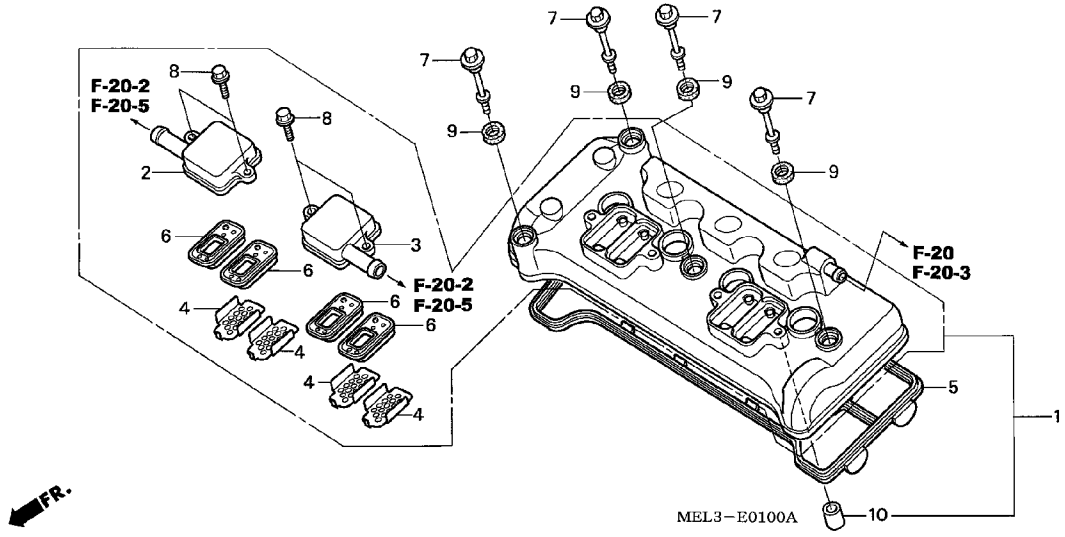


| Ref. No. | L.O.N. | (Relative ref. Number) Description | F.R.T. |
|---|---|---|---|
| 1 | 1111C4 | COVER, CYLINDER HEAD ····· | 2.8 |
| 5 | 1111D2 | GASKET, CYLINDER HEAD COVER ·· | 2.8 |
| 6 | | (4) | |
| | 314125 | VALVE, PAIR CHECK ····· | 1.3 |
| | | .NOTE: Same time for two units or more | |
| | 314125D | .'06 model add ····· | 0.3 |
| | 314125E | .'07 model add ····· | 0.3 |
| | 3141A8 | VALVE, PAIR CHECK :FOR 1 VEHICLE ····· | 1.3 |
| | 3141A8B | .'06 model add ····· | 0.3 |
| | 3141A8C | .'07 model add ····· | 0.3 |

| Ref. No. | Part No. | Description | Reqd. QTY CBR1000RR 4 | 5 | 6 | 7 | Serial No. | Parts catalogue code |
|---|---|---|---|---|---|---|---|---|
| 1 | 12310-MEL-000 | COVER ASSY., CYLINDER HEAD ·· | 1 | 1 | 1 | 1 | | |
| 2 | 12331-MEL-000 | COVER, R. REED VALVE ····· | 1 | 1 | 1 | 1 | | |
| 3 | 12332-MEL-000 | COVER, L. REED VALVE ····· | 1 | 1 | 1 | 1 | | |
| 4 | 12341-MAT-750 | PLATE, PORT (AI) ····· | 4 | 4 | 4 | 4 | | |
| 5 | 12391-MCJ-000 | GASKET, HEAD COVER ····· | 1 | 1 | 1 | 1 | | |
| 6 | 18601-MCJ-000 | VALVE COMP., REED ····· | 4 | 4 | 4 | 4 | | |
| 7 | 90002-MY5-850 | BOLT, HEAD COVER ····· | 4 | 4 | 4 | 4 | | |
| 8 | 90004-GHB-660 | BOLT, FLANGE, 6X22(NSHF) ···· | 4 | 4 | 4 | 4 | | |
| 9 | 90543-MV9-670 | RUBBER, MOUNTING ····· | 4 | 4 | 4 | 4 | | |
| 10 | 94301-08140 | DOWEL PIN, 8X14 ····· | 4 | 4 | 4 | 4 | | |

# CYLINDER HEAD



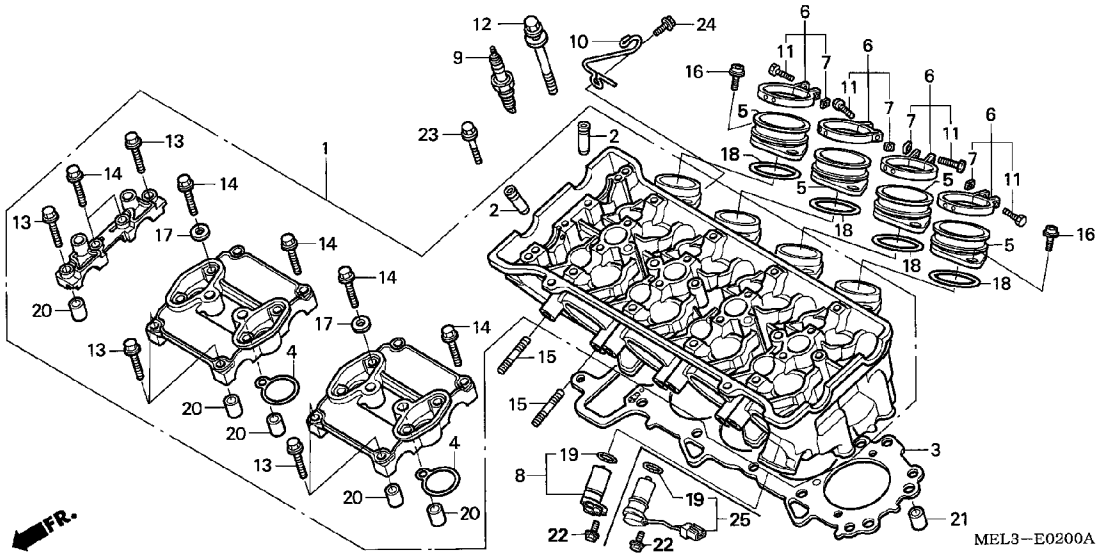


| Ref. No. | L.O.N. | (Relative ref. Number) Description | F.R.T. |
|---|---|---|---|
| 1 | 111106 | HEAD, CYLINDER ····· | 8.1 |
| | | .INCLUDES: Engine removal and installation | |
| | | .INCLUDES: Valve adjust and reface | |
| 2 | 1111L9 | GUIDE, INTAKE VALVE(ONE) ····· | 5.1 |
| | | .INCLUDES: Engine removal and installation | |
| | | .INCLUDES: Reaming | |
| | | .INCLUDES: Valve adjust and reface | |
| | 1111L9A | .Replace all intake valve guide add ····· | 2.1 |
| | 1111M0 | GUIDE, EXHAUST VALVE(ONE) ···· | 5.1 |
| | | .INCLUDES: Engine removal and installation | |
| | | .INCLUDES: Reaming | |
| | | .INCLUDES: Valve adjust and reface | |
| | 1111M0A | .Replace all exhaust valve guide add ····· | 2.1 |
| | 1111M9 | GUIDE, VALVE :FOR 1 VEHICLE ·· | 9.6 |
| | | .INCLUDES: Engine removal and installation | |
| + | | .INCLUDES: Reaming | |

| Ref. No. | Part No. | Description | Reqd. QTY CBR1000RR 4 | 5 | 6 | 7 | Serial No. | Parts catalogue code |
|---|---|---|---|---|---|---|---|---|
| 1 | 12010-MEL-000 | HEAD ASSY., CYLINDER ····· | 1 | 1 | - | - | | |
| | 12010-MEL-D20 | ····· | - | - | 1 | 1 | | |
| 2 | 12204-MEL-305 | GUIDE, VALVE (O.S.) ····· | 16 | 16 | 16 | 16 | | |
| 3 | 12251-MEL-013 | GASKET, CYLINDER HEAD ····· | 1 | 1 | - | - | | |
| | 12251-MEL-D21 | ····· | - | - | 1 | 1 | | |
| 4 | 12395-MCJ-000 | GASKET, PLUG HOLE ····· | 4 | 4 | 4 | 4 | | |
| 5 | 16210-MEL-000 | INSULATOR COMP., THROTTLE BODY | 4 | 4 | - | - | -------- -------- | BR,E,ED,EK,G,KO,MX,U,2ED,2G,2KO,2U,3E,4EK |
| | 16210-MEL-621 | ····· | 4 | 4 | - | - | -------- -------- | F,2F |
| | 16210-MEL-D20 | ····· | - | - | 4 | 4 | | |
| 6 | 16218-MEL-000 | BAND, INSULATOR ····· | 4 | 4 | 4 | 4 | | |
| 7 | 16222-MV4-300 | NUT, SQUARE, 5MM ····· | 4 | 4 | 4 | 4 | | |
| 8 | 28810-P7Z-004 | PICK UP ASSY. ····· | 1 | 1 | - | - | | |
| 9 | 31912-MEL-003 | PLUG, SPARK (IMR9C-9HES)(NGK) | 4 | 4 | 4 | 4 | | |
| | 31922-MEL-003 | PLUG, SPARK (VUH27ES)(DENSO) | 4 | - | - | - | 2026285 | |
| | | | - | 4 | 4 | 4 | | |
| 10 | 32109-MEL-000 | GUIDE, HARNESS ····· | 1 | 1 | - | - | | |
| 11 | 90005-MEL-000 | BOLT, RECESSED, 5X22 ····· | 4 | 4 | 4 | 4 | | |
| 12 | 90007-MEL-003 | BOLT-WASHER, 9X105 ····· | 10 | 10 | 10 | 10 | | |
| 13 | 90017-MA6-000 | BOLT, FLANGE, 6X45.5 ····· | 6 | 6 | 6 | 6 | | |
| 14 | 90019-MA6-000 | BOLT, FLANGE, 6X39.5 ····· | 14 | 14 | 14 | 14 | | |
| 15 | 90035-MM5-000 | BOLT, STUD, 8X24 ····· | 8 | 8 | 8 | 8 | | |
| 16 | 90071-MEL-000 | BOLT, FLANGE SOCKET, 6X16 ··· | 8 | 8 | 8 | 8 | | |
| 17 | 90463-ML7-000 | WASHER, SEALING, 6.5MM ····· | 8 | 8 | 8 | 8 | | |
| 18 | 91301-MEL-003 | O-RING, 44.3X2.5 ····· | 4 | 4 | 4 | 4 | | |
| 19 | 91309-PX4-003 | O-RING, 16X2.1(NOK) ····· | 1 | 1 | 1 | 1 | | |
| 20 | 94301-08200 | DOWEL PIN, 8X20 ····· | 10 | 10 | 10 | 10 | | |

# CYLINDER HEAD



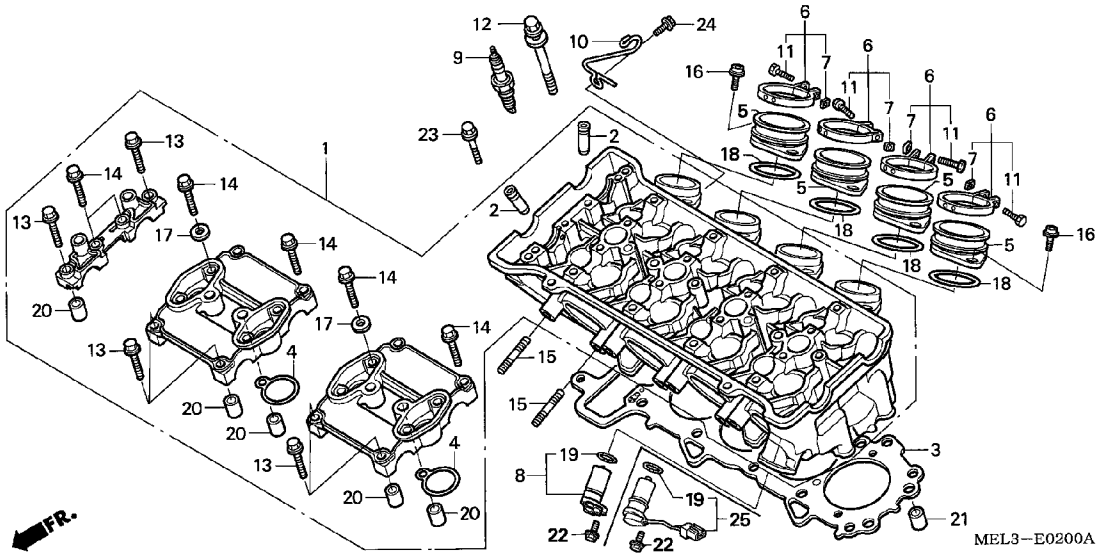


| Ref. No. | L.O.N. | (Relative ref. Number) Description | F.R.T. |
|---|---|---|---|
| + 2 | | .INCLUDES: Valve adjust and reface | |
| 3 | 111115 | GASKET, CYLINDER HEAD ····· | 4.2 |
| | | .INCLUDES: Engine removal and installation | |
| 5 | | (18) | |
| | 311131 | INSULATOR, THROTTLE BODY/ CARBURETOR ····· | 1.3 |
| | 3111B6 | INSULATOR, THROTTLE BODY/ CARBURETOR :FOR 1 VEHICLE ··· | 1.4 |
| 8 | 614117 | GENERATOR, CAM PULSE ····· | 0.3 |
| 9 | 614130 | PLUG, SPARK ····· | 1.2 |
| | | .NOTE: Same time for two units or more | |
| | 614130A | .'06 model add ····· | 0.3 |
| | 614130D | .'07 model add ····· | 0.3 |
| | 6141B2 | PLUG, SPARK :FOR 1 VEHICLE ··· | 1.2 |
| | 6141B2A | .'06 model add ····· | 0.3 |
| | 6141B2B | .'07 model add ····· | 0.3 |
| 25 | 614117 | GENERATOR, CAM PULSE ····· | 0.4 |

| Ref. No. | Part No. | Description | Reqd. QTY CBR1000RR 4 | 5 | 6 | 7 | Serial No. | Parts catalogue code |
|---|---|---|---|---|---|---|---|---|
| 21 | 94301-10160 | DOWEL PIN, 10X16 ····· | 2 | 2 | 2 | 2 | | |
| 22 | 95701-06018-07 | BOLT, FLANGE, 6X18 ····· | 1 | 1 | 1 | 1 | | |
| 23 | 95701-06045-00 | BOLT, FLANGE, 6X45 ····· | 2 | 2 | - | - | | |
| | 90021-MFA-D00 | ····· | - | - | 2 | 2 | | |
| 24 | 96300-06012-00 | BOLT, FLANGE, 6X12 ····· | 1 | 1 | - | - | | |
| 25 | 36140-MEL-D21 | PULSER ASSY., CAM ····· | - | - | 1 | 1 | | |

# CAMSHAFT/VALVE



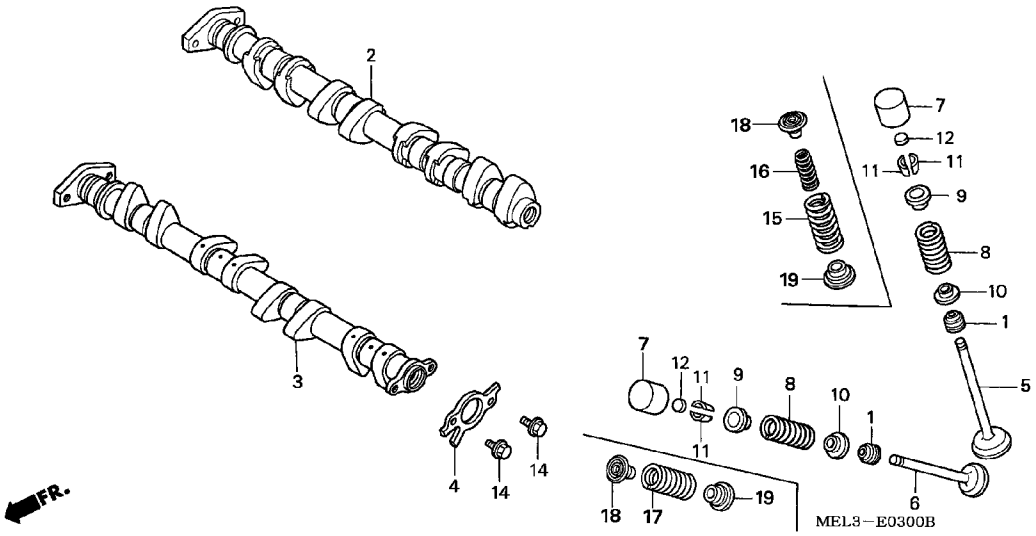


| Ref. No. | L.O.N. | (Relative ref. Number) Description | F.R.T. |
|---|---|---|---|
| 2 | 1111E5 | CAMSHAFT :INTAKE | 4.0 |
| | | .INCLUDES: Valve clearance adjustment | |
| | 1111F1 | CAMSHAFT :BOTH | 4.6 |
| 3 | 1111E6 | CAMSHAFT :EXHAUST | 4.0 |
| | | .INCLUDES: Valve clearance adjustment | |
| | 1111F1 | CAMSHAFT :BOTH | 4.6 |
| 4 | 111119 | ROTOR, CAM PULSE | 2.9 |
| 5 | 1111N0 | VALVE, INTAKE(ONE) | 4.6 |
| | | .INCLUDES: Engine removal and installation | |
| | | .INCLUDES: Refacing | |
| | 1111N0A | .Replace all intake valve add | 1.4 |
| | 1111P0 | VALVE :FOR 1 VEHICLE | 7.6 |
| | | .INCLUDES: Engine removal and installation | |
| | | .INCLUDES: Refacing | |
| 6 | 1111N1 | VALVE, EXHAUST(ONE) | 4.6 |
| | | .INCLUDES: Engine removal and installation | |
| | | .INCLUDES: Refacing | |
| | 1111N1A | .Replace all exhaust valve add | 1.4 |
| + | 1111P0 | VALVE :FOR 1 VEHICLE | 7.6 |

| Ref. No. | Part No. | Description | Reqd. QTY CBR1000RR 4 | 5 | 6 | 7 | Serial No. | Parts catalogue code |
|---|---|---|---|---|---|---|---|---|
| 1 | 12209-KT7-013 | SEAL, VALVE STEM | 16 | 16 | 16 | 16 | | |
| 2 | 14110-MEL-000 | CAMSHAFT COMP., IN. | 1 | 1 | - | - | | |
| | 14110-MEL-D20 | | - | - | 1 | 1 | | |
| 3 | 14210-MEL-000 | CAMSHAFT COMP., EX. | 1 | 1 | - | - | | |
| | 14210-MEL-D20 | | - | - | 1 | 1 | | |
| 4 | 14405-MEE-000 | ROTOR, CAM PULSE | 1 | 1 | - | - | | |
| | 14405-MCJ-000 | ROTOR, PULSE | - | - | 1 | 1 | | |
| 5 | 14711-MEL-000 | VALVE, IN. | 8 | 8 | - | - | | |
| | 14711-MEL-D20 | | - | - | 8 | 8 | | |
| 6 | 14721-MEL-000 | VALVE, EX. | 8 | 8 | 8 | 8 | | |
| 7 | 14731-MCJ-000 | LIFTER, VALVE | 16 | 16 | 16 | 16 | | |
| 8 | 14751-MEL-000 | SPRING, VALVE | 16 | 16 | - | - | | |
| 9 | 14771-MBW-000 | RETAINER, VALVE SPRING | 16 | 16 | - | - | | |
| 10 | 14775-MBW-000 | SEAT, VALVE SPRING | 16 | 16 | - | - | | |
| 11 | 14781-MV9-671 | COTTER, VALVE | 32 | 32 | 32 | 32 | | |
| 12 | 14901-KT7-013 | SHIM, TAPPET (1.200) | 16 | 16 | 16 | 16 | | |
| | 14902-KT7-013 | SHIM, TAPPET (1.225) | 16 | 16 | 16 | 16 | | |
| | 14903-KT7-013 | SHIM, TAPPET (1.250) | 16 | 16 | 16 | 16 | | |
| | 14904-KT7-013 | SHIM, TAPPET (1.275) | 16 | 16 | 16 | 16 | | |
| | 14905-KT7-013 | SHIM, TAPPET (1.300) | 16 | 16 | 16 | 16 | | |
| | 14906-KT7-013 | SHIM, TAPPET (1.325) | 16 | 16 | 16 | 16 | | |
| | 14907-KT7-013 | SHIM, TAPPET (1.350) | 16 | 16 | 16 | 16 | | |
| | 14908-KT7-013 | SHIM, TAPPET (1.375) | 16 | 16 | 16 | 16 | | |
| | 14909-KT7-013 | SHIM, TAPPET (1.400) | 16 | 16 | 16 | 16 | | |
| | 14910-KT7-013 | SHIM, TAPPET (1.425) | 16 | 16 | 16 | 16 | | |
| | 14911-KT7-013 | SHIM, TAPPET (1.450) | 16 | 16 | 16 | 16 | | |
| | 14912-KT7-013 | SHIM, TAPPET (1.475) | 16 | 16 | 16 | 16 | | |

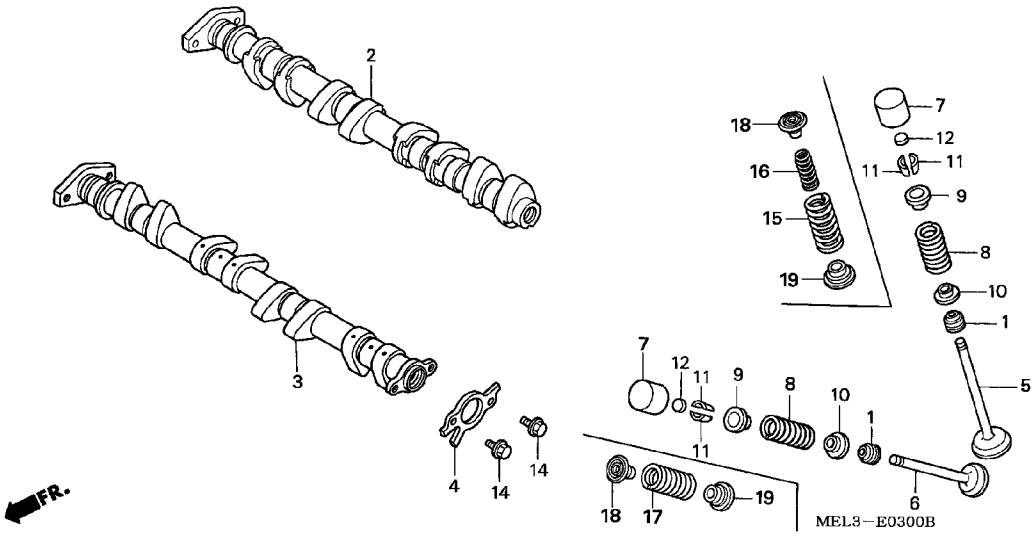


| Ref. No. | L.O.N. | (Relative ref. Number) Description | F.R.T. |
|---|---|---|---|
| + 6 | | .INCLUDES: Engine removal and installation | |
| | | .INCLUDES: Refacing | |
| 8 | | (1,9,10,11,15,16,17,18,19) | |
| | 1111P2 | SPRING AND/OR STEM SEAL, INTAKE VALVE(ONE) ---------- | 4.4 |
| | | .INCLUDES: Engine removal and installation | |
| | 1111P2A | .Replace all intake spring add | 0.7 |
| | 1111P2B | .Replace all intake and exhaust spring add --------- | 1.5 |
| | 1111P3 | SPRING AND/OR STEM SEAL, EXHAUST VALVE(ONE) --------- | 4.4 |
| | | .INCLUDES: Engine removal and installation | |
| | 1111P3A | .Replace all exhaust spring add ---------- | 0.7 |
| | 1111P3B | .Replace all intake and exhaust spring add --------- | 1.5 |
| | 1111Q2 | SPRING AND/OR STEM SEAL, VALVE :FOR 1 VEHICLE -------- | 5.9 |
| | | .INCLUDES: Engine removal and installation | |

| Ref. No. | Part No. | Description | Reqd. QTY CBR1000RR 4 | 5 | 6 | 7 | Serial No. | Parts catalogue code |
|---|---|---|---|---|---|---|---|---|
| 12) | 14913-KT7-013 | SHIM, TAPPET (1.500) -------- | 16 | 16 | 16 | 16 | | |
| | 14914-KT7-013 | SHIM, TAPPET (1.525) -------- | 16 | 16 | 16 | 16 | | |
| | 14915-KT7-013 | SHIM, TAPPET (1.550) -------- | 16 | 16 | 16 | 16 | | |
| | 14916-KT7-013 | SHIM, TAPPET (1.575) -------- | 16 | 16 | 16 | 16 | | |
| | 14917-KT7-013 | SHIM, TAPPET (1.600) -------- | 16 | 16 | 16 | 16 | | |
| | 14918-KT7-013 | SHIM, TAPPET (1.625) -------- | 16 | 16 | 16 | 16 | | |
| | 14919-KT7-013 | SHIM, TAPPET (1.650) -------- | 16 | 16 | 16 | 16 | | |
| | 14920-KT7-013 | SHIM, TAPPET (1.675) -------- | 16 | 16 | 16 | 16 | | |
| | 14921-KT7-013 | SHIM, TAPPET (1.700) -------- | 16 | 16 | 16 | 16 | | |
| | 14922-KT7-013 | SHIM, TAPPET (1.725) -------- | 16 | 16 | 16 | 16 | | |
| | 14923-KT7-013 | SHIM, TAPPET (1.750) -------- | 16 | 16 | 16 | 16 | | |
| | 14924-KT7-013 | SHIM, TAPPET (1.775) -------- | 16 | 16 | 16 | 16 | | |
| | 14925-KT7-013 | SHIM, TAPPET (1.800) -------- | 16 | 16 | 16 | 16 | | |
| | 14926-KT7-013 | SHIM, TAPPET (1.825) -------- | 16 | 16 | 16 | 16 | | |
| | 14927-KT7-013 | SHIM, TAPPET (1.850) -------- | 16 | 16 | 16 | 16 | | |
| | 14928-KT7-013 | SHIM, TAPPET (1.875) -------- | 16 | 16 | 16 | 16 | | |
| | 14929-KT7-013 | SHIM, TAPPET (1.900) -------- | 16 | 16 | 16 | 16 | | |
| | 14930-KT7-013 | SHIM, TAPPET (1.925) -------- | 16 | 16 | 16 | 16 | | |
| | 14931-KT7-013 | SHIM, TAPPET (1.950) -------- | 16 | 16 | 16 | 16 | | |
| | 14932-KT7-013 | SHIM, TAPPET (1.975) -------- | 16 | 16 | 16 | 16 | | |
| | 14933-KT7-013 | SHIM, TAPPET (2.000) -------- | 16 | 16 | 16 | 16 | | |
| | 14934-KT7-013 | SHIM, TAPPET (2.025) -------- | 16 | 16 | 16 | 16 | | |
| | 14935-KT7-013 | SHIM, TAPPET (2.050) -------- | 16 | 16 | 16 | 16 | | |
| | 14936-KT7-013 | SHIM, TAPPET (2.075) -------- | 16 | 16 | 16 | 16 | | |
| | 14937-KT7-013 | SHIM, TAPPET (2.100) -------- | 16 | 16 | 16 | 16 | | |
| | 14938-KT7-013 | SHIM, TAPPET (2.125) -------- | 16 | 16 | 16 | 16 | | |
| | 14939-KT7-013 | SHIM, TAPPET (2.150) -------- | 16 | 16 | 16 | 16 | | |
| | 14940-KT7-013 | SHIM, TAPPET (2.175) -------- | 16 | 16 | 16 | 16 | | |
| | 14941-KT7-013 | SHIM, TAPPET (2.200) -------- | 16 | 16 | 16 | 16 | | |

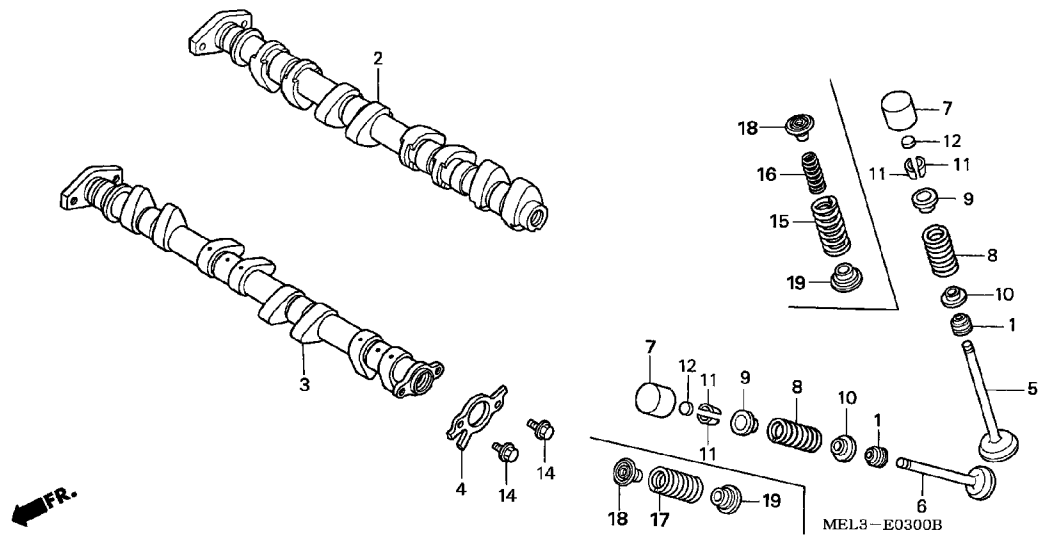


| Ref. No. | Part No. | Description | Reqd. QTY CBR1000RR 4 | 5 | 6 | 7 | Serial No. | Parts catalogue code |
|---|---|---|---|---|---|---|---|---|
| 12) | 14942-KT7-013 | SHIM, TAPPET (2.225) ····· | 16 | 16 | 16 | 16 | | |
| | 14943-KT7-013 | SHIM, TAPPET (2.250) ····· | 16 | 16 | 16 | 16 | | |
| | 14944-KT7-013 | SHIM, TAPPET (2.275) ····· | 16 | 16 | 16 | 16 | | |
| | 14945-KT7-013 | SHIM, TAPPET (2.300) ····· | 16 | 16 | 16 | 16 | | |
| | 14946-KT7-013 | SHIM, TAPPET (2.325) ····· | 16 | 16 | 16 | 16 | | |
| | 14947-KT7-013 | SHIM, TAPPET (2.350) ····· | 16 | 16 | 16 | 16 | | |
| | 14948-KT7-013 | SHIM, TAPPET (2.375) ····· | 16 | 16 | 16 | 16 | | |
| | 14949-KT7-013 | SHIM, TAPPET (2.400) ····· | 16 | 16 | 16 | 16 | | |
| | 14950-KT7-013 | SHIM, TAPPET (2.425) ····· | 16 | 16 | 16 | 16 | | |
| | 14951-KT7-013 | SHIM, TAPPET (2.450) ····· | 16 | 16 | 16 | 16 | | |
| | 14952-KT7-013 | SHIM, TAPPET (2.475) ····· | 16 | 16 | 16 | 16 | | |
| | 14953-KT7-013 | SHIM, TAPPET (2.500) ····· | 16 | 16 | 16 | 16 | | |
| | 14954-KT7-013 | SHIM, TAPPET (2.525) ····· | 16 | 16 | 16 | 16 | | |
| | 14955-KT7-013 | SHIM, TAPPET (2.550) ····· | 16 | 16 | 16 | 16 | | |
| | 14956-KT7-013 | SHIM, TAPPET (2.575) ····· | 16 | 16 | 16 | 16 | | |
| | 14957-KT7-013 | SHIM, TAPPET (2.600) ····· | 16 | 16 | 16 | 16 | | |
| | 14958-KT7-013 | SHIM, TAPPET (2.625) ····· | 16 | 16 | 16 | 16 | | |
| | 14959-KT7-013 | SHIM, TAPPET (2.650) ····· | 16 | 16 | 16 | 16 | | |
| | 14960-KT7-013 | SHIM, TAPPET (2.675) ····· | 16 | 16 | 16 | 16 | | |
| | 14961-KT7-013 | SHIM, TAPPET (2.700) ····· | 16 | 16 | 16 | 16 | | |
| | 14962-KT7-013 | SHIM, TAPPET (2.725) ····· | 16 | 16 | 16 | 16 | | |
| | 14963-KT7-013 | SHIM, TAPPET (2.750) ····· | 16 | 16 | 16 | 16 | | |
| | 14964-KT7-013 | SHIM, TAPPET (2.775) ····· | 16 | 16 | 16 | 16 | | |
| | 14965-KT7-013 | SHIM, TAPPET (2.800) ····· | 16 | 16 | 16 | 16 | | |
| 14 | 90081-MEL-000 | BOLT, FLANGE KNOCK, 6X9 ····· | 2 | 2 | - | - | | |
| | 90081-149-010 | BOLT, KNOCK, 6X10 ····· | - | - | 2 | 2 | | |
| 15 | 14751-MEL-D20 | SPRING, IN. VALVE OUTER ····· | - | - | 8 | 8 | | |
| 16 | 14752-MEL-D20 | SPRING, IN. VALVE INNER ····· | - | - | 8 | 8 | | |

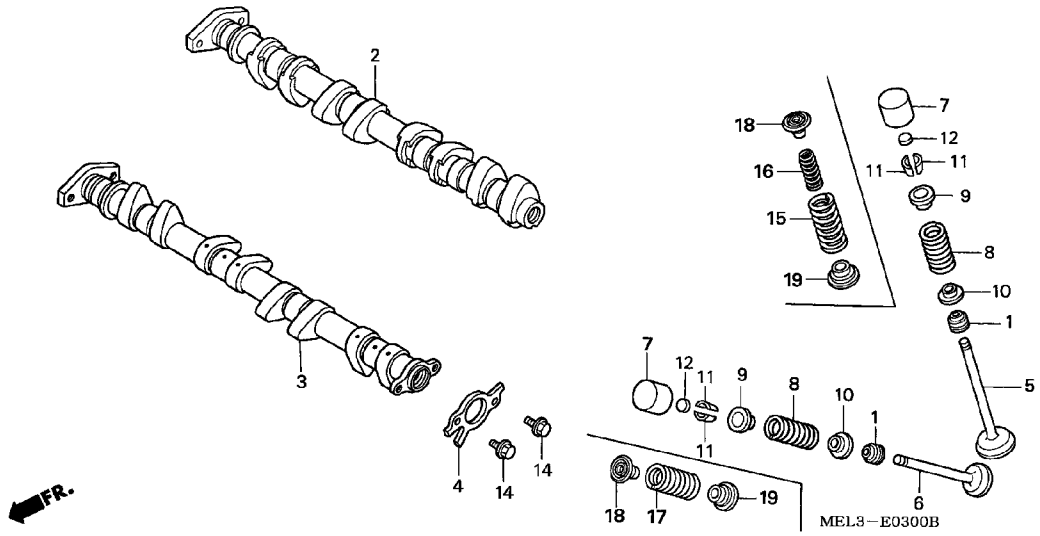


| Ref. No. | Part No. | Description | Reqd. QTY CBR1000RR 4 | 5 | 6 | 7 | Serial No. | Parts catalogue code |
|---|---|---|---|---|---|---|---|---|
| 17 | 14761-MEL-D20 | SPRING, EX. VALVE ····· | - | - | 8 | 8 | | |
| 18 | 14771-MEE-000 | RETAINER, VALVE SPRING ····· | - | - | 16 | 16 | | |
| 19 | 14775-MEE-000 | SEAT, VALVE SPRING ····· | - | - | 16 | 16 | | |

# CAM CHAIN/TENSIONER



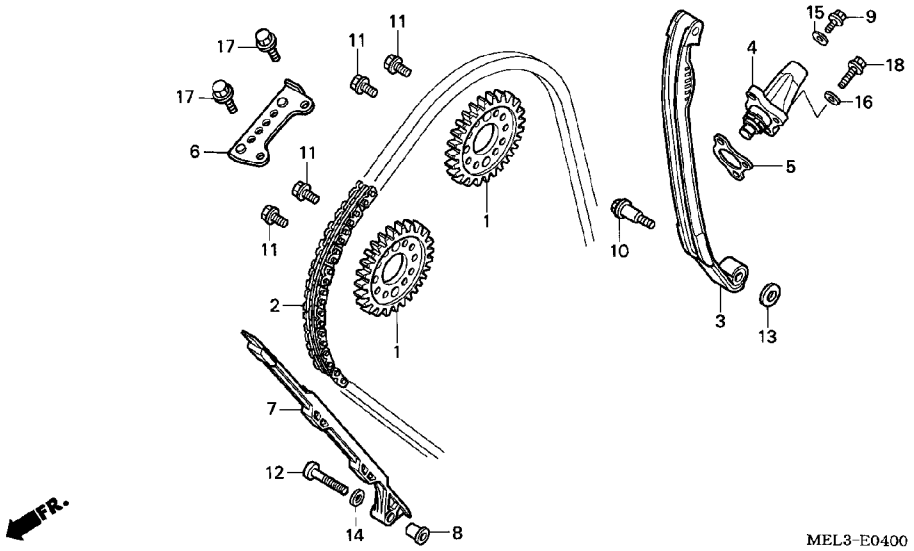


| Ref. No. | L.O.N. | (Relative ref. Number) Description | F.R.T. |
|---|---|---|---|
| 1 | 1111F7 | SPROCKET, CAM :INTAKE -------- | 3.1 |
| | 1111F8 | SPROCKET, CAM :EXHAUST ------- | 3.1 |
| | 1111F9 | SPROCKET, CAM :FOR 1 VEHICLE - | 3.2 |
| 2 | 110140 | CHAIN, CAM ---------- | 4.3 |
| 3 | 111130 | TENSIONER, CAM CHAIN --------- | 4.3 |
| 4 | | (5) | |
| | 111133 | LIFTER, TENSIONER ---------- | 0.6 |
| 6 | 1111G9 | GUIDE B, CAM CHAIN ---------- | 2.8 |
| 7 | 111139 | GUIDE, CAM CHAIN ---------- | 4.3 |

| Ref. No. | Part No. | Description | Reqd. QTY CBR1000RR 4 | 5 | 6 | 7 | Serial No. | Parts catalogue code |
|---|---|---|---|---|---|---|---|---|
| 1 | 14321-MEL-000 | SPROCKET, CAM (34T) --------- | 2 | 2 | 2 | 2 | | |
| 2 | 14401-MAS-003 | CHAIN, CAM ---------- | 1 | 1 | - | - | | |
| | | | - | - | 1 | - | -------- 2231368 | |
| | 14401-MAS-013 | ---------- | - | - | 1 | - | 2231369 | |
| | | | - | - | - | 1 | | |
| 3 | 14510-MEL-010 | TENSIONER COMP., CAM CHAIN -- | 1 | 1 | - | - | | |
| | 14510-MFA-D00 | ---------- | - | - | 1 | 1 | | |
| 4 | 14520-MEL-000 | LIFTER ASSY., TENSIONER ----- | 1 | 1 | - | - | | |
| | 14520-MFA-D01 | ---------- | - | - | 1 | 1 | | |
| 5 | 14523-MCW-003 | GASKET, TENSIONER HOLE ------ | 1 | 1 | - | - | | |
| | 14525-MFA-D01 | ---------- | - | - | 1 | 1 | | |
| 6 | 14546-MCJ-000 | GUIDE B, CAM CHAIN ---------- | 1 | 1 | 1 | 1 | | |
| 7 | 14620-MW0-003 | GUIDE A, CAM CHAIN (NOK) ---- | 1 | 1 | 1 | 1 | | |
| 8 | 14626-MCJ-000 | COLLAR, 6MM ---------- | 1 | 1 | 1 | 1 | | |
| 9 | 90004-GHB-600 | BOLT, FLANGE, 6X10(NSHF) ---- | 1 | 1 | 1 | 1 | | |
| 10 | 90022-MBW-000 | PIVOT, CAM CHAIN TENSIONER -- | 1 | 1 | 1 | 1 | | |
| 11 | 90082-HA0-000 | BOLT, FLANGE KNOCK, 7X10.5 -- | 4 | 4 | 4 | 4 | | |
| 12 | 90108-MEL-000 | BOLT, TORX, 6X32 ---------- | 1 | 1 | 1 | 1 | | |
| 13 | 90401-MBW-000 | WASHER, 6MM ---------- | 1 | 1 | 1 | 1 | | |
| 14 | 90408-KW1-900 | WASHER, 6MM ---------- | 1 | 1 | 1 | 1 | | |
| 15 | 90442-397-000 | WASHER, SEALING, 6MM -------- | 1 | 1 | 1 | 1 | | |
| 16 | 90463-ML7-000 | WASHER, SEALING, 6.5MM ------ | 2 | 2 | 2 | 2 | | |
| 17 | 95701-06014-00 | BOLT, FLANGE, 6X14 ---------- | 2 | 2 | 2 | 2 | | |
| 18 | 96001-06025-00 | BOLT, FLANGE, 6X25 ---------- | 2 | 2 | - | - | | |
| | 90010-GHB-670 | ---------- | - | - | 2 | 2 | | |

# E-5 RIGHT CRANKCASE COVER

F 9

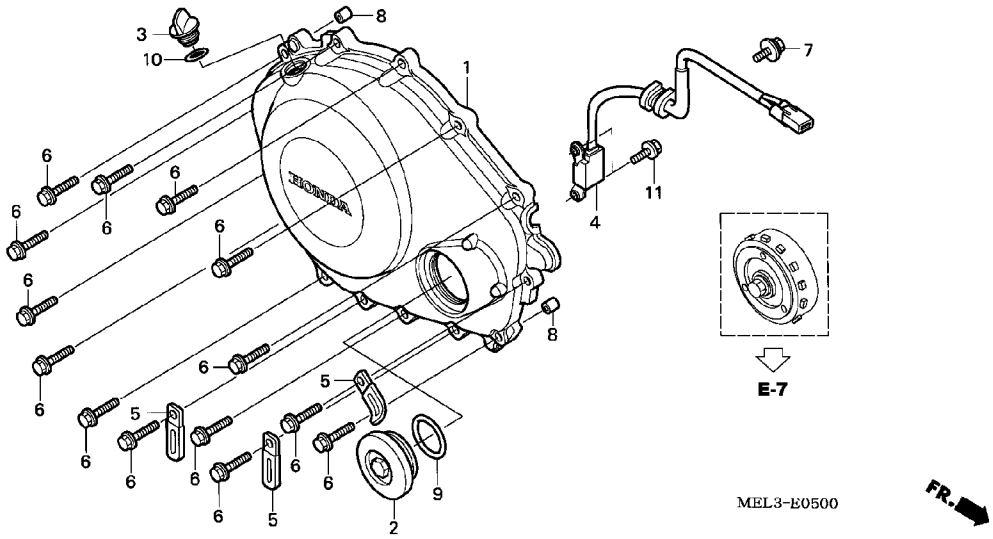


| Ref. No. | L.O.N. | (Relative ref. Number) Description | F.R.T. |
|---|---|---|---|
| 1 | 110159 | COVER, CRANKCASE :RIGHT ------ | 0.7 |
| | 110159B | .'06 model add ---------- | 0.1 |
| | 110159C | .'07 model add ---------- | 0.1 |
| 4 | 614110 | GENERATOR, IGNITION PULSE ---- | 0.7 |
| | 614110D | .'06 model add ---------- | 0.1 |
| | 614110F | .'07 model add ---------- | 0.1 |

| Ref. No. | Part No. | Description | Reqd. QTY CBR1000RR 4 | 5 | 6 | 7 | Serial No. | Parts catalogue code |
|---|---|---|---|---|---|---|---|---|
| 1 | 11331-MEL-000 | COVER, R. ---------- | 1 | 1 | - | - | | |
| | 11331-MEL-D20 | ---------- | - | - | 1 | 1 | | |
| 2 | 11332-ML7-000 | CAP, 45MM ---------- | 1 | 1 | - | - | | |
| | 11332-MER-D00 | ---------- | - | - | 1 | 1 | | |
| 3 | 15611-KA4-710 | CAP, OIL FILLER ---------- | 1 | 1 | 1 | 1 | | |
| 4 | 30300-MEL-000 | GENERATOR ASSY., PULSE ------ | 1 | 1 | - | - | | |
| | 30300-MEL-D21 | ---------- | - | - | 1 | 1 | | |
| 5 | 90601-KJ9-000 | CLIP, 4X50 ---------- | 3 | 3 | - | - | | |
| 6 | 90006-GHB-680 | BOLT, FLANGE, 6X28(NSHF) ---- | 14 | 14 | 14 | 14 | | |
| 7 | 90021-MM5-000 | BOLT-WASHER, 6X12 ---------- | 1 | 1 | 1 | 1 | | |
| 8 | 90701-MV9-670 | DOWEL PIN, 10X16 ---------- | 2 | 2 | 2 | 2 | | |
| 9 | 91301-ML7-003 | O-RING, 48.1X3.6(ARAI) ------ | 1 | 1 | 1 | 1 | | |
| 10 | 91307-KF0-003 | O-RING, 18X3(ARAI) ---------- | 1 | 1 | 1 | 1 | | |
| 11 | 95701-06014-00 | BOLT, FLANGE, 6X14 ---------- | 2 | 2 | 2 | 2 | | |

# CLUTCH



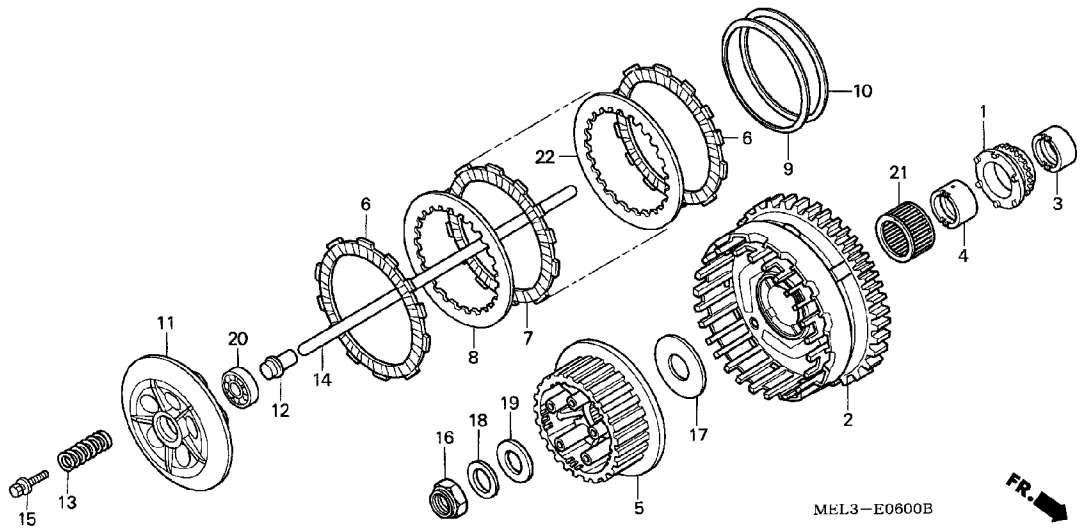


| Ref. No. | L.O.N. | (Relative ref. Number) Description | F.R.T. |
|---|---|---|---|
| 1 | | (3) | |
| | 1131A2 | SPROCKET, OIL PUMP DRIVE ----- | 1.2 |
| | 1131A2B | .'06 model add ---------- | 0.1 |
| | 1131A2C | .'07 model add ---------- | 0.1 |
| 2 | | (4,21) | |
| | 2121A0 | OUTER, CLUTCH ---------- | 1.0 |
| | 2121A0F | .'06 model add ---------- | 0.1 |
| | 2121A0G | .'07 model add ---------- | 0.1 |
| 5 | 212112 | CENTER, CLUTCH ---------- | 1.0 |
| | 212112G | .'06 model add ---------- | 0.1 |
| | 212112H | .'07 model add ---------- | 0.1 |
| 6 | | (7,8,9,10,22) | |
| | 2121A1 | DISC, CLUTCH FRICTION -------- | 0.8 |
| | | .NOTE: Same time for two units or more | |
| | 2121A1F | .'06 model add ---------- | 0.1 |
| | 2121A1G | .'07 model add ---------- | 0.1 |
| 11 | 2121A3 | PLATE, CLUTCH PRESSURE ------- | 0.8 |
| | 2121A3E | .'06 model add ---------- | 0.1 |
| | 2121A3F | .'07 model add ---------- | 0.1 |
| 12 | 2121A5 | PIECE, CLUTCH JOINT --------- | 0.7 |
| | 2121A5A | .'06 model add ---------- | 0.1 |
| | 2121A5B | .'07 model add ---------- | 0.1 |
| +13 | 212107 | SPRING, CLUTCH ---------- | 0.7 |

| Ref. No. | Part No. | Description | Reqd. QTY CBR1000RR 4 | 5 | 6 | 7 | Serial No. | Parts catalogue code |
|---|---|---|---|---|---|---|---|---|
| 1 | 15131-MEL-003 | SPROCKET, OIL PUMP DRIVE (26T) | 1 | 1 | 1 | 1 | | |
| 2 | 22110-MEL-000 | OUTER COMP. B, CLUTCH (77T) · | 1 | - | - | - | -------- -------- | F,G |
| | 22100-MEL-020 | OUTER COMP. A, CLUTCH (77T) · | 1 | 1 | - | - | | |
| | 22110-MEL-020 | OUTER COMP. B, CLUTCH (77T) · | 1 | - | - | - | -------- -------- | BR,E,ED,KO,MX,U |
| | | | - | 1 | - | - | | |
| | 22100-MEL-D20 | OUTER COMP. A, CLUTCH (77T) · | - | - | 1 | 1 | | |
| | 22110-MEL-D20 | OUTER COMP. B, CLUTCH (77T) · | - | - | 1 | 1 | | |
| 3 | 22116-MEL-000 | COLLAR, OIL PUMP SPROCKET --- | 1 | 1 | 1 | 1 | | |
| 4 | 22117-MEL-000 | GUIDE A, CLUTCH OUTER (HOLENOTHING) | 1 | 1 | - | - | | |
| | 22118-MEL-000 | GUIDE B, CLUTCH OUTER (2MM HOLE) | 1 | 1 | - | - | | |
| | 22117-MEL-D20 | GUIDE A, CLUTCH OUTER (HOLENOTHING) | - | - | 1 | 1 | | |
| | 22118-MEL-D20 | GUIDE B, CLUTCH OUTER (2MM HOLE) | - | - | 1 | 1 | | |
| 5 | 22120-MEL-000 | CENTER, CLUTCH ---------- | 1 | 1 | - | - | | |
| | 22120-MEL-D20 | ---------- | - | - | 1 | 1 | | |
| 6 | 22201-MBB-000 | DISK, CLUTCH FRICTION ------- | 2 | 2 | 2 | 2 | | |
| 7 | 22201-MEL-000 | DISK, CLUTCH FRICTION ------- | 6 | 6 | 6 | 6 | | |
| 8 | 22321-MEL-000 | PLATE, CLUTCH ---------- | 6 | 6 | 6 | 6 | | |
| 9 | 22325-MN4-000 | SPRING, CLUTCH PLATE -------- | 1 | - | - | - | -------- 2000130 | |
| | 22325-MEL-000 | ---------- | 1 | - | - | - | 2000131 | |
| | | | - | 1 | 1 | 1 | | |
| 10 | 22326-MBB-000 | SEAT, JUDDER SPRING --------- | 1 | - | - | - | -------- 2000130 | |
| | 22326-MEL-000 | ---------- | 1 | - | - | - | 2000131 | |
| | | | - | 1 | 1 | 1 | | |

# CLUTCH



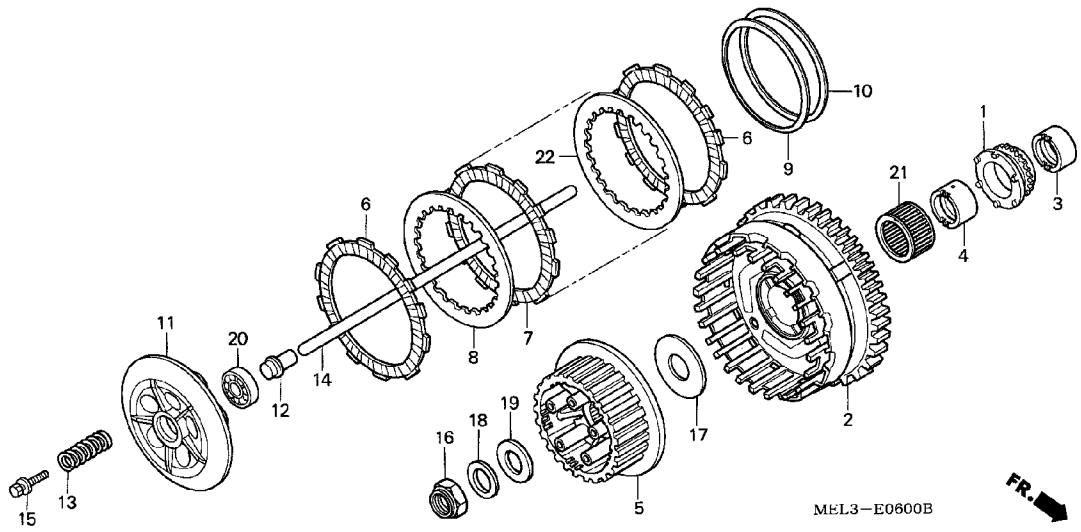


| Ref. No. | L.O.N. | (Relative ref. Number) Description | F.R.T. |
|---|---|---|---|
| +13 | | .NOTE: Same time for two units or more | |
| | 212107F | .'06 model add ····· | 0.1 |
| | 212107G | .'07 model add ····· | 0.1 |
| 14 | 2121B6 | ROD, CLUTCH LIFTER ····· | 0.2 |
| 20 | 2121B4 | BEARING, CLUTCH LIFTER ····· | 0.8 |
| | 2121B4E | .'06 model add ····· | 0.1 |
| | 2121B4F | .'07 model add ····· | 0.1 |

| Ref. No. | Part No. | Description | Reqd. QTY CBR1000RR 4 | 5 | 6 | 7 | Serial No. | Parts catalogue code |
|---|---|---|---|---|---|---|---|---|
| 11 | 22350-MEL-000 | PLATE, CLUTCH PRESSURE ····· | 1 | 1 | - | - | | |
| | 22350-MFA-D00 | ····· | - | - | 1 | 1 | | |
| 12 | 22366-MM5-000 | PIECE, CLUTCH JOINT ····· | 1 | 1 | 1 | 1 | | |
| 13 | 22401-MEL-000 | SPRING, CLUTCH ····· | 5 | 5 | 5 | 5 | | |
| 14 | 22850-MEL-000 | ROD, CLUTCH LIFTER ····· | 1 | 1 | - | - | | |
| | 22850-MEL-D20 | ROD COMP., CLUTCH LIFTER ···· | - | - | 1 | 1 | | |
| 15 | 90022-MAT-000 | BOLT-WASHER, 6X32 ····· | 5 | 5 | 5 | 5 | | |
| 16 | 90231-MS2-610 | NUT, LOCK, 25MM ····· | 1 | 1 | 1 | 1 | | |
| 17 | 90401-MS2-610 | WASHER, THRUST, 28.2X56X2 ··· | 1 | 1 | 1 | 1 | | |
| 18 | 90432-MM8-003 | WASHER, SPRING, 25MM (CHUO HATSUJO) | 1 | 1 | 1 | 1 | | |
| 19 | 90451-VM0-000 | WASHER, THRUST, 25X40X2 ····· | 1 | 1 | 1 | 1 | | |
| 20 | 91008-362-000 | BEARING, RADIAL BALL, 16003 · | 1 | 1 | 1 | 1 | | |
| 21 | 91101-MEE-003 | BEARING A, NEEDLE, 35X41X23.8 (RED) | 1 | 1 | - | - | | |
| | 91102-MEE-003 | BEARING B, NEEDLE, 35X41X23.8 (WHITE) | 1 | 1 | - | - | | |
| | 91103-MEE-003 | BEARING C, NEEDLE, 35X41X23.8 (PURPLE) | 1 | 1 | - | - | | |
| | 91101-MEL-D20 | BEARING A, NEEDLE, 35X41X27.8 (RED) | - | - | 1 | 1 | | |
| | 91102-MEL-D20 | BEARING B, NEEDLE, 35X41X27.8 (WHITE) | - | - | 1 | 1 | | |
| | 91103-MEL-D20 | BEARING C, NEEDLE, 35X41X27.8 (PURPLE) | - | - | 1 | 1 | | |
| 22 | 22321-MEL-000 | PLATE, CLUTCH ····· | 1 | - | - | - | -------- 2000130 | BR,E,ED,KO,MX,U |

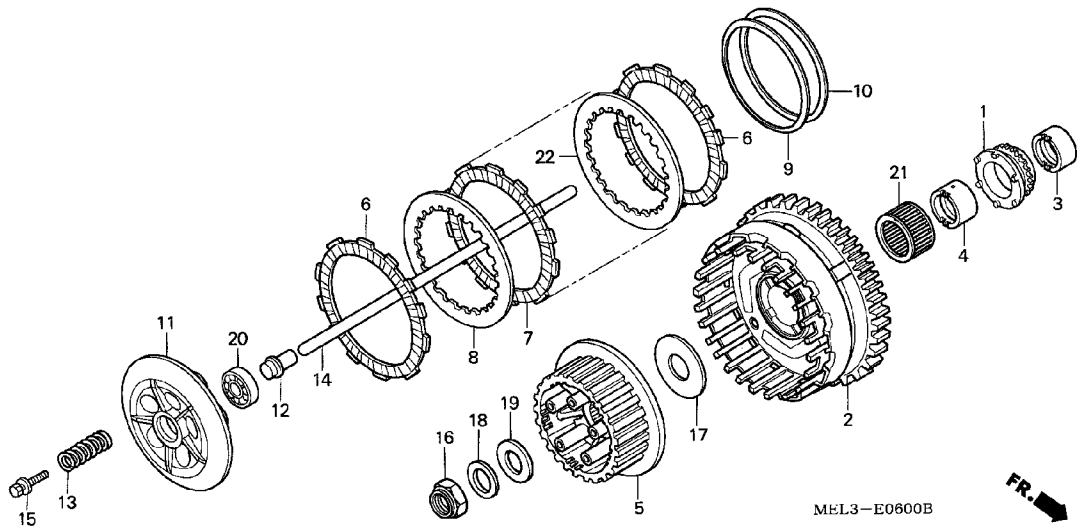


| Ref. No. | Part No. | Description | Reqd. QTY CBR1000RR 4 | 5 | 6 | 7 | Serial No. | Parts catalogue code |
|---|---|---|---|---|---|---|---|---|
| 22) | 22322-MEL-000 | PLATE B, CLUTCH ..... | 1 | - | - | - | -------- -------- | F,G |
| | | | 1 | - | - | - | 2000131 -------- | BR,E,ED,KO,MX,U |
| | | | - | 1 | 1 | 1 | | |

# STARTING CLUTCH



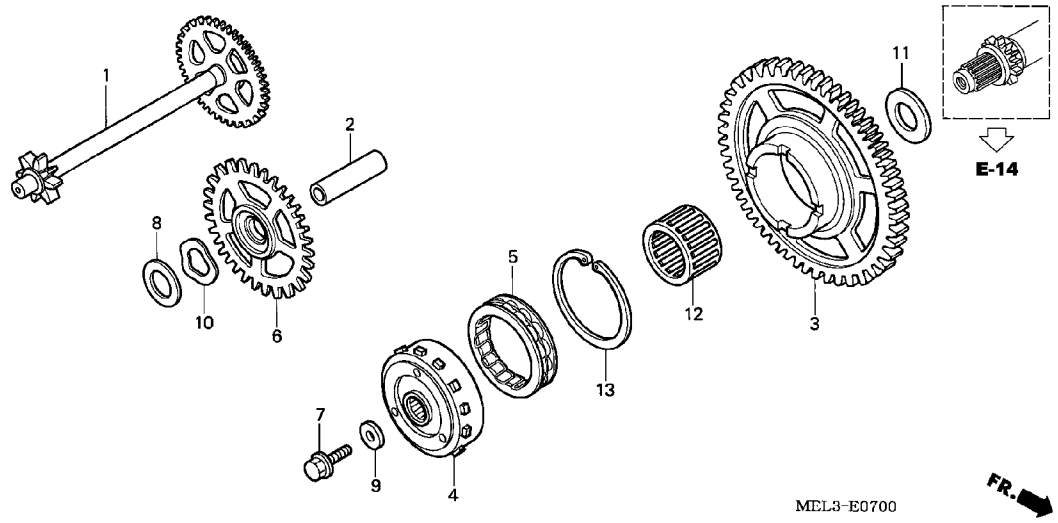


| Ref. No. | L.O.N. | (Relative ref. Number) Description | F.R.T. |
|---|---|---|---|
| 1 | 612125 | GEAR, STARTER REDUCTION ····· | 1.0 |
| | 612125D | .'06 model add ····· | 0.1 |
| | 612125G | .'07 model add ····· | 0.1 |
| 3 | 612120 | GEAR, STARTER DRIVEN ····· | 0.8 |
| | 612120E | .'06 model add ····· | 0.1 |
| | 612120G | .'07 model add ····· | 0.1 |
| 4 | 612131 | OUTER, STARTING CLUTCH ····· | 0.9 |
| | 612131D | .'06 model add ····· | 0.1 |
| | 612131F | .'07 model add ····· | 0.1 |
| 5 | 6121A2 | CLUTCH, STARTING ONE WAY ····· | 0.9 |
| | 6121A2B | .'06 model add ····· | 0.1 |
| | 6121A2C | .'07 model add ····· | 0.1 |
| 6 | | (2) | |
| | 612135 | GEAR, STARTER IDLE ····· | 0.7 |
| | 612135C | .'06 model add ····· | 0.1 |
| | 612135D | .'07 model add ····· | 0.1 |

| Ref. No. | Part No. | Description | Reqd. QTY CBR1000RR 4 | 5 | 6 | 7 | Serial No. | Parts catalogue code |
|---|---|---|---|---|---|---|---|---|
| 1 | 28100-MEL-000 | GEAR COMP., STARTER REDUCTION (9T/60T) | 1 | 1 | - | - | | |
| | 28100-MEL-D20 | GEAR COMP., STARTER REDUCTION (9T/59T) | - | - | 1 | 1 | | |
| 2 | 28102-ML7-000 | PIN, 10X36.5 ····· | 1 | 1 | 1 | 1 | | |
| 3 | 28110-MEL-000 | GEAR COMP., STARTING DRIVEN (40T) | 1 | 1 | 1 | 1 | | |
| 4 | 28115-MEL-000 | OUTER, STARTING CLUTCH ····· | 1 | 1 | - | - | | |
| | 28115-MEL-D20 | ····· | - | - | 1 | 1 | | |
| 5 | 28126-MEL-000 | CLUTCH, ONE WAY ····· | 1 | 1 | 1 | 1 | | |
| 6 | 28141-MEL-000 | GEAR, STARTER IDLE (25T) ···· | 1 | 1 | 1 | 1 | | |
| 7 | 90013-430-000 | BOLT, SPECIAL, 10X25 ····· | 1 | 1 | 1 | 1 | | |
| 8 | 90401-MEE-000 | WASHER, 10X28X1 ····· | 1 | 1 | 1 | 1 | | |
| 9 | 90404-MBW-000 | WASHER, 10MM ····· | 1 | 1 | - | - | | |
| | 90405-MFA-D00 | WASHER, 10.5X31.8 ····· | - | - | 1 | 1 | | |
| 10 | 90435-MEE-000 | WASHER, WAVE ····· | 1 | 1 | 1 | 1 | | |
| 11 | 90456-MEL-000 | WASHER, THRUST, 22.1X45X3 ··· | 1 | 1 | - | - | | |
| | 90456-MFA-D00 | WASHER, THRUST, 22.1X42X3 ··· | - | - | 1 | 1 | | |
| 12 | 91025-KT7-003 | BEARING, NEEDLE, 30X35X20 ··· | 1 | 1 | 1 | 1 | | |
| 13 | 94520-63150 | CIRCLIP, INTERNAL, 63MM ····· | 1 | 1 | 1 | 1 | | |

# E-8 LEFT CRANKCASE COVER

F14

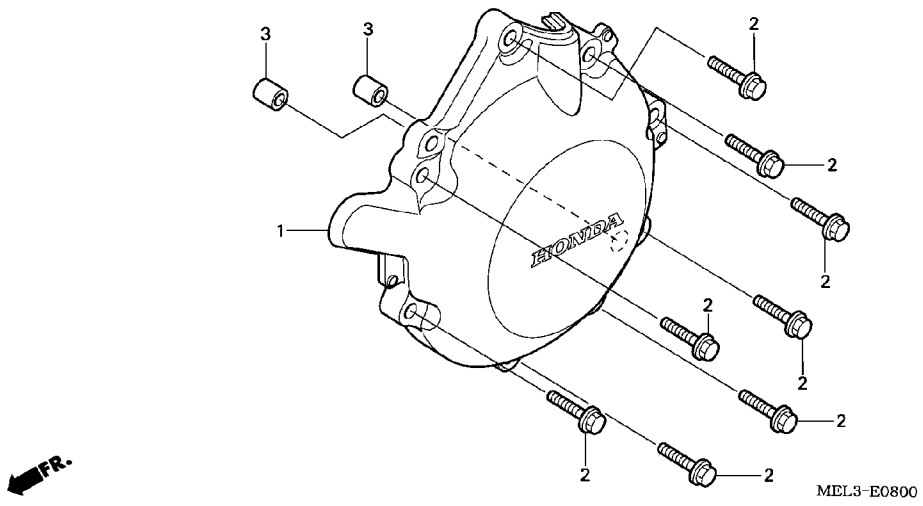


| Ref. No. | L.O.N. | (Relative ref. Number) Description | F.R.T. |
|---|---|---|---|
| 1 | 1101A6 | COVER, CRANKCASE :LEFT ····· | 0.7 |
| | 1101A6B | .'06 model add ····· | 0.1 |
| | 1101A6C | .'07 model add ····· | 0.1 |

| Ref. No. | Part No. | Description | Reqd. QTY CBR1000RR 4 | 5 | 6 | 7 | Serial No. | Parts catalogue code |
|---|---|---|---|---|---|---|---|---|
| 1 | 11321-MEL-305 | COVER, A.C. GENERATOR ····· | 1 | 1 | - | - | | |
| | 11321-MEL-D20 | ····· | - | - | 1 | 1 | | |
| 2 | 90006-GHB-680 | BOLT, FLANGE, 6X28(NSHF) ···· | 8 | 8 | 8 | 8 | | |
| 3 | 94301-08140 | DOWEL PIN, 8X14 ····· | 2 | 2 | 2 | 2 | | |

# GENERATOR



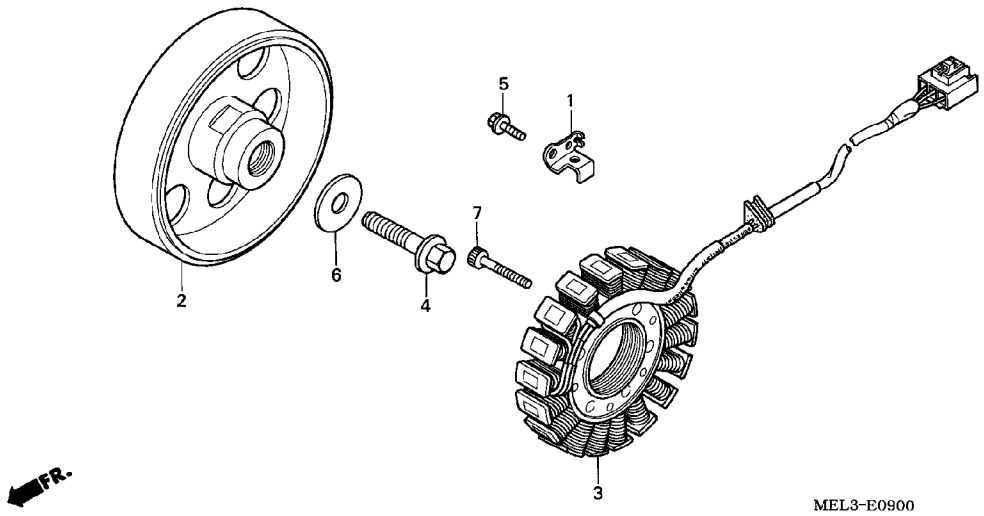


| Ref. No. | L.O.N. | (Relative ref. Number) Description | F.R.T. |
|---|---|---|---|
| 2 | 613105 | ROTOR OR FLYWHEEL | 0.8 |
| | 613105G | .'06 model add | 0.1 |
| | 613105J | .'07 model add | 0.1 |
| 3 | 6131A3 | STATOR | 0.9 |
| | 6131A3E | .'06 model add | 0.1 |
| | 6131A3H | .'07 model add | 0.1 |

| Ref. No. | Part No. | Description | Reqd. QTY CBR1000RR 4 | 5 | 6 | 7 | Serial No. | Parts catalogue code |
|---|---|---|---|---|---|---|---|---|
| 1 | 11333-MEL-000 | CLAMP, A.C. GENERATOR CORD | 1 | 1 | 1 | 1 | | |
| 2 | 31110-MEL-003 | FLYWHEEL COMP. | 1 | 1 | - | - | | |
| | 31110-MEL-D21 | | - | - | 1 | 1 | | |
| 3 | 31120-MEL-013 | STATOR COMP. | 1 | 1 | - | - | | |
| | 31120-MEL-D21 | | - | - | 1 | 1 | | |
| 4 | 90003-MN4-000 | BOLT, FLANGE, 10X35 | 1 | 1 | 1 | 1 | | |
| 5 | 96001-06012-00 | BOLT, FLANGE, 6X12 | 1 | - | - | - | | |
| | 90029-MT4-000 | BOLT, FLANGE, 6X12(CT200) | - | 1 | - | - | | |
| | 95701-06012-00 | BOLT, FLANGE, 6X12 | - | - | 1 | 1 | | |
| 6 | 90405-MCA-780 | WASHER, 10.5X27 | 1 | 1 | 1 | 1 | | |
| 7 | 96600-06028-00 | BOLT, SOCKET, 6X28 | 4 | 4 | 4 | 4 | | |

# WATER PUMP



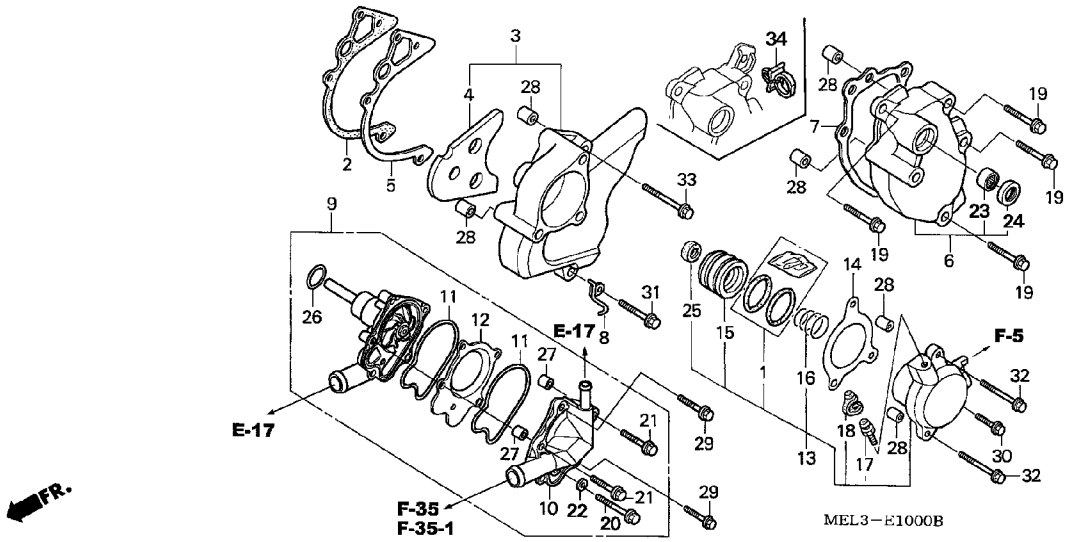


| Ref. No. | L.O.N. | (Relative ref. Number) Description | F.R.T. |
|---|---|---|---|
| 3 | 1101B0 | COVER, CRANKCASE :LEFT REAR -- | 0.2 |
| 6 | 2101D5 | COVER, CHANGE ---------- | 0.7 |
| 7 | 2101G8 | GASKET, CHANGE COVER --------- | 0.7 |
| 9 | 114103 | PUMP ASSY., WATER ---------- | 0.9 |
| | 114103D | .'06 model add ---------- | 0.1 |
| | 114103E | .'07 model add ---------- | 0.1 |
| 10 | 1141B0 | COVER, WATER PUMP ---------- | 0.8 |
| | 1141B0B | .'06 model add ---------- | 0.1 |
| | 1141B0C | .'07 model add ---------- | 0.1 |
| 11 | 1141B1 | GASKET, WATER PUMP COVER ----- | 0.7 |
| | | .NOTE: Same time for two units | |
| | 1141B1B | .'06 model add ---------- | 0.1 |
| | 1141B1C | .'07 model add ---------- | 0.1 |
| 13 | 212115 | CYLINDER, CLUTCH SLAVE ------- | 0.4 |
| | | .INCLUDES: Air bleeding | |
| 14 | 2121B0 | GASKET, SLAVE CYLINDER ------- | 0.1 |
| 15 | | (1) | |
| | 2121B1 | PISTON, SLAVE CYLINDER ------- | 0.5 |
| | | .INCLUDES: Air bleeding | |
| 23 | 1101E0 | BEARING, GEARSHIFT SPINDLE --- | 0.8 |
| 24 | 1101F9 | OIL SEAL, GEARSHIFT SPINDLE -- | 0.7 |

| Ref. No. | Part No. | Description | Reqd. QTY CBR1000RR 4 | 5 | 6 | 7 | Serial No. | | Parts catalogue code |
|---|---|---|---|---|---|---|---|---|---|
| 1 | 04121-MEJ-305 | O-RING SET ---------- | 1 | 1 | 1 | 1 | | | |
| 2 | 11343-MEL-000 | GASKET, L. RR. COVER -------- | 1 | 1 | 1 | 1 | | | |
| 3 | 11350-MEL-000 | COVER COMP., L. RR. --------- | 1 | 1 | - | - | | | |
| | 11350-MEL-D20 | ---------- | - | - | 1 | 1 | | | |
| 4 | 11352-MEL-300 | RUBBER, L. COVER ---------- | 1 | 1 | 1 | 1 | | | |
| 5 | 11355-MEL-000 | PLATE, DRIVE CHAIN GUIDE ---- | 1 | 1 | 1 | 1 | | | |
| 6 | 11370-MEL-000 | COVER COMP., CHANGE --------- | 1 | - | - | - | | | |
| | 11370-MEL-D00 | ---------- | - | 1 | - | - | | | |
| | 11370-MEL-D20 | ---------- | - | - | 1 | 1 | | | |
| 7 | 11372-MEL-000 | GASKET, CHANGE COVER -------- | 1 | 1 | 1 | 1 | | | |
| 8 | 17558-MEL-000 | GUIDE, DRAIN TUBE ---------- | 1 | - | - | - | | | |
| 9 | 19200-MEL-000 | PUMP COMP., WATER ---------- | 1 | - | - | - | -------- | 2013857 | |
| | 19200-MEL-010 | ---------- | 1 | - | - | - | 2013858 | 2026273 | |
| | 19200-MEL-020 | ---------- | 1 | - | - | - | 2026274 | | |
| | | | - | 1 | - | - | | | |
| | 19200-MEL-D20 | ---------- | - | - | 1 | 1 | | | |
| 10 | 19221-MEL-300 | COVER, WATER PUMP ---------- | 1 | 1 | - | - | | | |
| | 19221-MEL-D20 | ---------- | - | - | 1 | 1 | | | |
| 11 | 19226-MEL-300 | GASKET, WATER PUMP --------- | 2 | 2 | 2 | 2 | | | |
| 12 | 19231-MEL-300 | PLATE, WATER PUMP ---------- | 1 | 1 | 1 | 1 | | | |
| 13 | 22860-MEJ-003 | CYLINDER ASSY., CLUTCH SLAVE | 1 | 1 | 1 | 1 | | | |
| 14 | 22862-MW7-650 | GASKET, SLAVE CYLINDER ------ | 1 | 1 | 1 | 1 | | | |
| 15 | 22863-MEJ-003 | PISTON, SLAVE CYLINDER ------ | 1 | 1 | 1 | 1 | | | |
| 16 | 22864-MEJ-003 | SPRING, SLAVE CYLINDER ------ | 1 | 1 | 1 | 1 | | | |
| 17 | 22866-MF2-711 | SCREW, BLEEDER ---------- | 1 | 1 | 1 | 1 | | | |
| 18 | 43353-461-771 | CAP, BLEEDER ---------- | 1 | 1 | 1 | 1 | | | |

# WATER PUMP



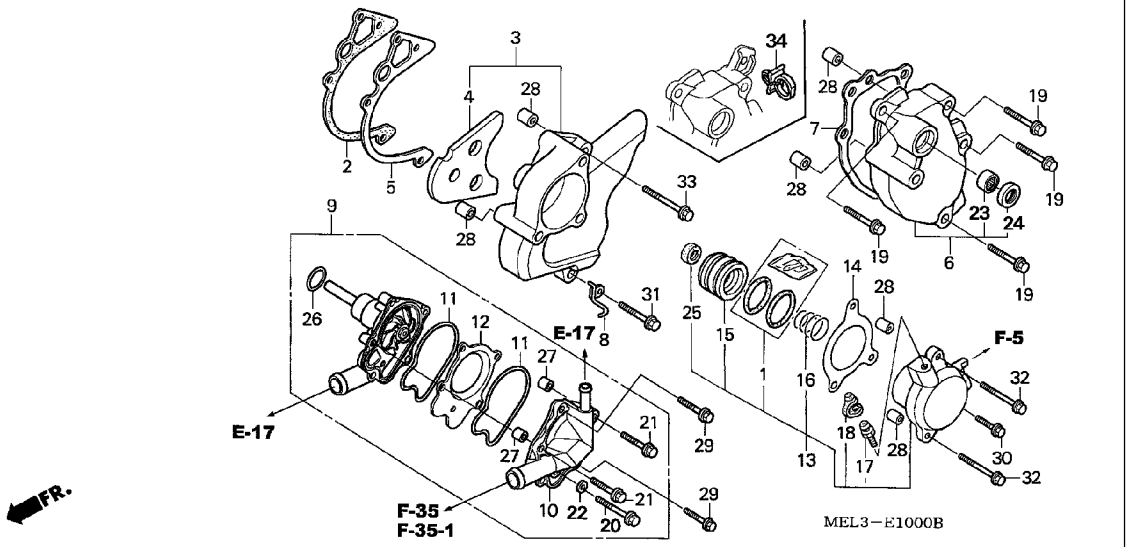


| Ref. No. | Part No. | Description | Reqd. QTY CBR1000RR 4 | 5 | 6 | 7 | Serial No. | Parts catalogue code |
|---|---|---|---|---|---|---|---|---|
| 19 | 90006-GHB-680 | BOLT, FLANGE, 6X28(NSHF) | 4 | 4 | 4 | 4 | | |
| 20 | 96001-06032-00 | BOLT, FLANGE, 6X32 | 1 | - | - | - | | |
| | 90017-883-000 | | - | 1 | 1 | 1 | | |
| 21 | 96001-06025-00 | BOLT, FLANGE, 6X25 | 2 | - | - | - | | |
| | 90121-MV9-670 | | - | 2 | 2 | 2 | | |
| 22 | 90463-ML7-000 | WASHER, SEALING, 6.5MM | 1 | 1 | 1 | 1 | | |
| 23 | 91101-121-691 | BEARING, NEEDLE | 1 | 1 | 1 | 1 | | |
| 24 | 91203-KK3-830 | OIL SEAL, 14X22X5 | 1 | 1 | 1 | 1 | | |
| 25 | 91209-MB0-003 | OIL SEAL, 8X18X5 | 1 | 1 | 1 | 1 | | |
| 26 | 91302-MB0-013 | O-RING, 32.95X2.62(ARAI) | 1 | 1 | 1 | 1 | | |
| 27 | 94301-08100 | DOWEL PIN, 8X10 | 2 | 2 | 2 | 2 | | |
| 28 | 94301-08140 | DOWEL PIN, 8X14 | 6 | 6 | 6 | 6 | | |
| 29 | 95701-06045-00 | BOLT, FLANGE, 6X45 | 2 | 2 | - | - | | |
| | 90021-MFA-D00 | | - | - | 2 | 2 | | |
| 30 | 96001-06020-00 | BOLT, FLANGE, 6X20 | 1 | 1 | - | - | | |
| | 90010-GHB-650 | | - | - | 1 | 1 | | |
| 31 | 96001-06040-00 | BOLT, FLANGE, 6X40 | 1 | 1 | - | - | | |
| | 90010-GHB-710 | | - | - | 1 | 1 | | |
| 32 | 96001-06065-00 | BOLT, FLANGE, 6X65 | 2 | 2 | - | - | | |
| | 90010-GHB-760 | | - | - | 2 | 2 | | |
| 33 | 96001-06075-00 | BOLT, FLANGE, 6X75 | 1 | 1 | - | - | | |
| | 90010-GHB-780 | | - | - | 1 | 1 | | |
| 34 | 90682-735-A01 | CLIP, WIRE HARNESS | - | 1 | - | - | | |

# STARTING MOTOR



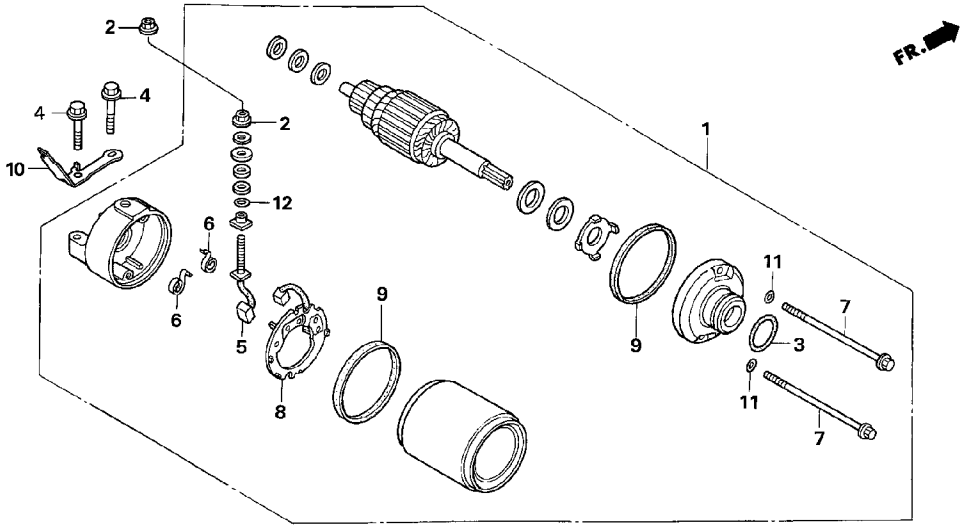


| Ref. No. | L.O.N. | (Relative ref. Number) Description | F.R.T. |
|---|---|---|---|
| 1 | | (3) | |
| | 612105 | MOTOR, STARTING ---------- | 1.1 |
| 5 | 6121A4 | TERMINAL, BRUSH(STARTER) ----- | 1.4 |
| 8 | 6121A5 | HOLDER, BRUSH(STARTER) ------- | 1.4 |

| Ref. No. | Part No. | Description | Reqd. QTY CBR1000RR 4 | 5 | 6 | 7 | Serial No. | Parts catalogue code |
|---|---|---|---|---|---|---|---|---|
| 1 | 31200-MEL-000 | MOTOR ASSY., STARTER -------- | 1 | 1 | - | - | | |
| | 31200-MEL-D21 | ---------- | - | - | 1 | 1 | | |
| 2 | 90071-MB0-000 | NUT-WASHER, 6MM ---------- | 2 | 2 | 2 | 2 | | |
| 3 | 91309-425-003 | O-RING, 24.4X3.1(ARAI) ------ | 1 | 1 | 1 | 1 | | |
| 4 | 95801-06025-08 | BOLT, FLANGE, 6X25 ---------- | 2 | 2 | 2 | 2 | | |
| 5 | 31201-MBE-008 | TERMINAL SET, BRUSH --------- | - | - | 1 | 1 | | |
| 6 | 31204-KS5-901 | SPRING, CARBON BRUSH -------- | - | - | 2 | 2 | | |
| 7 | 31205-MEL-D20 | BOLT, SETTING ---------- | - | - | 2 | 2 | | |
| 8 | 31206-MBE-008 | HOLDER SET, BRUSH ---------- | - | - | 1 | 1 | | |
| 9 | 31207-MBE-008 | RING ---------- | - | - | 2 | 2 | | |
| 10 | 32999-MEL-D20 | STAY, HARNESS GUIDE --------- | - | - | 1 | 1 | | |
| 11 | 91320-MBE-008 | O-RING ---------- | - | - | 2 | 2 | | |
| 12 | 91320-MB0-000 | O-RING ---------- | - | - | 1 | 1 | | |

# OIL PAN/OIL PUMP



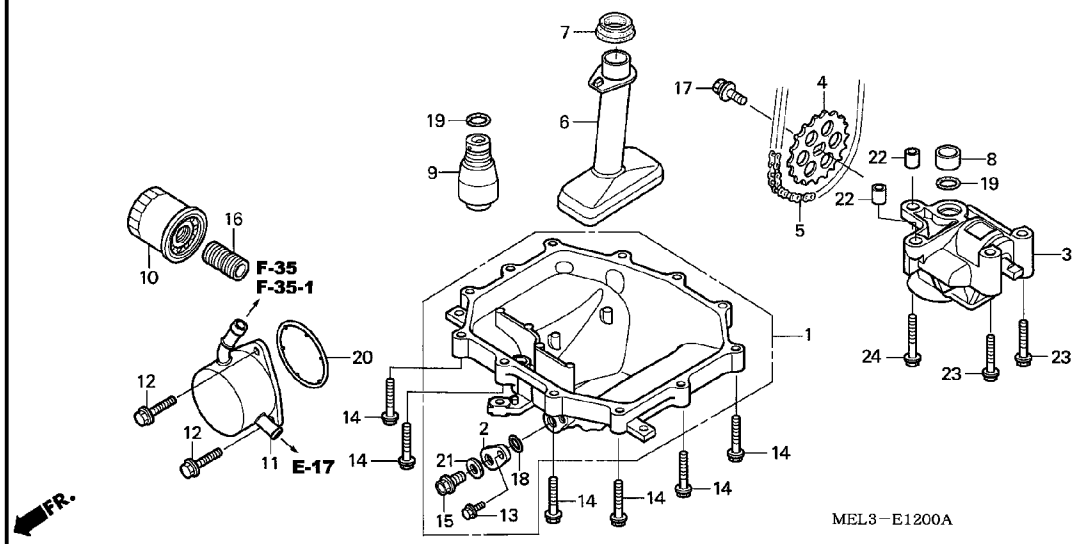


| Ref. No. | L.O.N. | (Relative ref. Number) Description | F.R.T. |
|---|---|---|---|
| 1 | 113145 | PAN, OIL AND/OR GASKET ····· | 1.4 |
| | 113145C | .'06 model add ····· | 0.6 |
| | 113145F | .'07 model add ····· | 0.6 |
| 3 | 113105 | PUMP ASSY., OIL ····· | 2.3 |
| | 113105J | .'06 model add ····· | 0.6 |
| | 113105M | .'07 model add ····· | 0.6 |
| 4 | 113111 | SPROCKET, OIL PUMP DRIVEN ···· | 1.2 |
| | 113111B | .'06 model add ····· | 0.1 |
| | 113111C | .'07 model add ····· | 0.1 |
| 5 | 113122 | CHAIN, OIL PUMP DRIVE ····· | 1.2 |
| | 113122F | .'06 model add ····· | 0.1 |
| | 113122G | .'07 model add ····· | 0.1 |
| 6 | | (7) | |
| | 1131B6 | STRAINER, OIL ····· | 1.4 |
| | 1131B6A | .'06 model add ····· | 0.6 |
| | 1131B6D | .'07 model add ····· | 0.6 |
| 9 | 113126 | VALVE, RELIEF ····· | 1.5 |
| | 113126C | .'06 model add ····· | 0.6 |
| | 113126F | .'07 model add ····· | 0.6 |
| 10 | 113180 | CARTRIDGE, OIL FILTER ····· | 0.3 |
| 11 | 1131B4 | COOLER, OIL ····· | 1.4 |
| | 1131B4G | .'06 model add ····· | 0.5 |
| | 1131B4H | .'07 model add ····· | 0.5 |
| 20 | 1131B7 | O-RING, OIL COOLER ····· | 1.3 |
| + | 1131B7A | .'06 model add ····· | 0.5 |

| Ref. No. | Part No. | Description | Reqd. QTY CBR1000RR 4 | 5 | 6 | 7 | Serial No. | Parts catalogue code |
|---|---|---|---|---|---|---|---|---|
| 1 | 11210-MEL-000 | PAN COMP., OIL ····· | 1 | 1 | 1 | 1 | | |
| 2 | 11212-MEL-300 | BASE, OIL PAN DRAIN ····· | 1 | 1 | 1 | 1 | | |
| 3 | 15100-MEL-000 | PUMP ASSY., OIL ····· | 1 | 1 | 1 | 1 | | |
| 4 | 15134-MEL-000 | SPROCKET, OIL PUMP DRIVEN (25T) | 1 | 1 | 1 | 1 | | |
| 5 | 15141-MEL-003 | CHAIN, OIL PUMP ····· | 1 | 1 | 1 | 1 | | |
| 6 | 15150-MEL-000 | STRAINER COMP., OIL ····· | 1 | 1 | 1 | 1 | | |
| 7 | 15154-MAT-000 | PACKING, OIL STRAINER ····· | 1 | 1 | 1 | 1 | | |
| 8 | 15155-MEL-000 | COLLAR, O-RING ····· | 1 | 1 | 1 | 1 | | |
| 9 | 15220-MBW-000 | VALVE ASSY., RELIEF ····· | 1 | 1 | - | - | | |
| | 15220-MEL-D20 | ····· | - | - | 1 | 1 | | |
| 10 | 15410-MCJ-003 | CARTRIDGE, OIL FILTER (TOYO ROKI) | 1 | 1 | 1 | 1 | | |
| 11 | 15700-MEL-000 | COOLER COMP., OIL ····· | 1 | 1 | 1 | 1 | | |
| 12 | 90004-GHB-640 | BOLT, FLANGE, 6X18(NSHF) ···· | 3 | 3 | - | - | | |
| | 90006-GHB-640 | ····· | - | - | 3 | 3 | | |
| 13 | 90006-GHB-630 | BOLT, FLANGE, 6X16(NSHF) ···· | 1 | 1 | 1 | 1 | | |
| 14 | 90006-GHB-700 | BOLT, FLANGE, 6X35(NSHF) ···· | 12 | 12 | 12 | 12 | | |
| 15 | 90012-MEL-000 | BOLT, DRAIN PLUG, 12MM ····· | 1 | 1 | 1 | 1 | | |
| 16 | 90019-MB0-000 | BOSS, OIL FILTER ····· | 1 | 1 | 1 | 1 | | |
| 17 | 90021-MM5-000 | BOLT-WASHER, 6X12 ····· | 1 | 1 | 1 | 1 | | |
| 18 | 91306-MEL-003 | O-RING, 21.9X1.8 ····· | 1 | 1 | 1 | 1 | | |
| 19 | 91313-MB0-003 | O-RING, 14.7X2.2(ARAI) ····· | 2 | 2 | 2 | 2 | | |
| 20 | 91354-MCT-003 | O-RING, OIL COOLER ····· | 1 | 1 | 1 | 1 | | |
| 21 | 94109-12000 | WASHER, DRAIN PLUG, 12MM ···· | 1 | 1 | 1 | 1 | | |

# OIL PAN/OIL PUMP



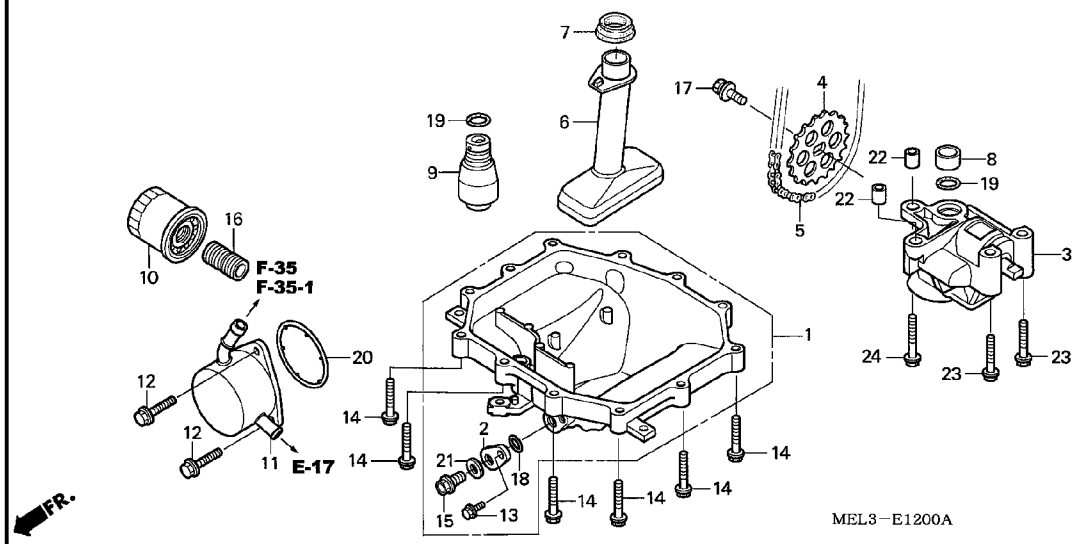


| Ref. No. | L.O.N. | (Relative ref. Number) Description | F.R.T. |
|---|---|---|---|
| +20 | 1131B7B | .'07 model add ---------- | 0.5 |

| Ref. No. | Part No. | Description | Reqd. QTY CBR1000RR 4 | 5 | 6 | 7 | Serial No. | Parts catalogue code |
|---|---|---|---|---|---|---|---|---|
| 22 | 94301-08140 | DOWEL PIN, 8X14 ---------- | 2 | 2 | 2 | 2 | | |
| 23 | 95701-06040-00 | BOLT, FLANGE, 6X40 --------- | 2 | 2 | 2 | 2 | | |
| 24 | 95701-06050-00 | BOLT, FLANGE, 6X50 --------- | 1 | 1 | 1 | 1 | | |

# CRANKCASE



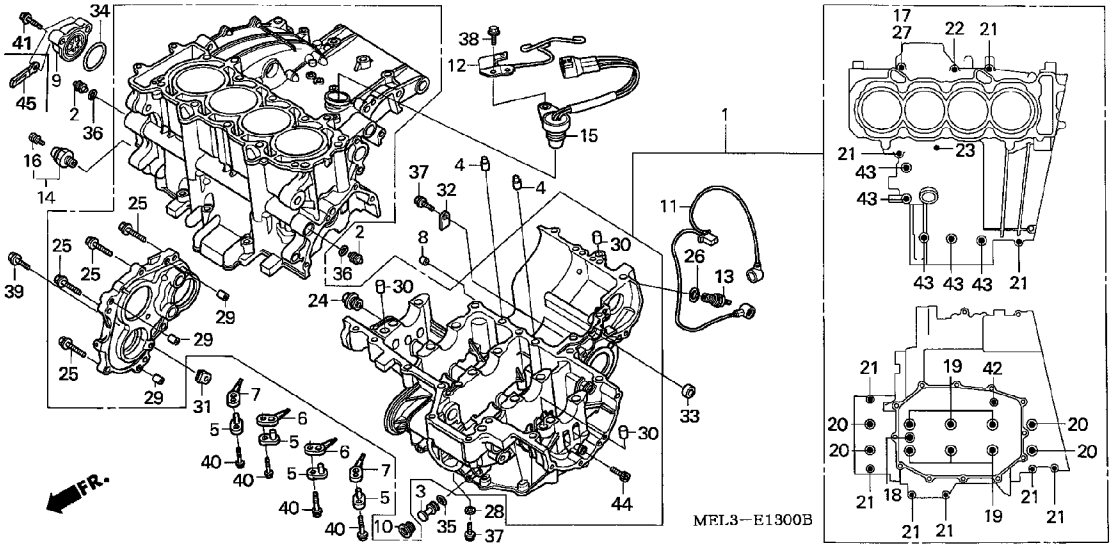


| Ref. No. | L.O.N. | (Relative ref. Number) Description | F.R.T. |
|---|---|---|---|
| 1 | 110105 | CRANKCASE SET ..... | 9.6 |
| | | .INCLUDES: Engine removal and installation | |
| 6 | | (5,7) | |
| | 1101G2 | JET, PISTON OIL ..... | 5.8 |
| | | .INCLUDES: Engine removal and installation | |
| | | .NOTE: Same time for two units or more | |
| 9 | | (34) | |
| | 1101G1 | FINDER, OIL LEVEL ..... | 0.3 |
| 11 | 611142 | SUB HARNESS, ENGINE ..... | 0.6 |
| 13 | | (26) | |
| | 6151B8 | SWITCH, NEUTRAL ..... | 1.0 |
| 14 | 615160 | SWITCH, OIL PRESSURE ..... | 0.3 |
| 15 | 617198 | SENSOR, SPEEDOMETER ..... | 0.5 |
| 33 | 2121B9 | OIL SEAL, CLUTCH LIFTER ROD .. | 5.7 |
| | | .INCLUDES: Engine removal and installation | |

| Ref. No. | Part No. | Description | Reqd. QTY CBR1000RR 4 | 5 | 6 | 7 | Serial No. | Parts catalogue code |
|---|---|---|---|---|---|---|---|---|
| 1 | 11000-MEL-000 | CRANKCASE SET ..... | 1 | - | - | - | | |
| | 11000-MEL-010 | ..... | - | 1 | - | - | | |
| | 11000-MEL-D20 | ..... | - | - | 1 | 1 | | |
| 2 | 11103-MEL-000 | PLUG, SEALING ..... | 2 | 2 | 2 | 2 | | |
| 3 | 11104-MEL-000 | PLUG, OIL COOLER ..... | 1 | 1 | 1 | 1 | | |
| 4 | 11105-MEL-000 | ORIFICE, 1.6MM ..... | 2 | 2 | 2 | 2 | | |
| 5 | 11145-MEL-000 | BUSH, ORIFICE ..... | 4 | 4 | 4 | 4 | | |
| 6 | 11146-MEL-000 | ORIFICE A, #100 ..... | 2 | 2 | 2 | 2 | | |
| 7 | 11147-MEL-000 | ORIFICE B, #100 ..... | 2 | 2 | 2 | 2 | | |
| 8 | 11206-MEL-000 | ORIFICE, 1.4MM ..... | 1 | 1 | 1 | 1 | | |
| 9 | 11360-MEE-000 | FINDER COMP., OIL LEVEL ..... | 1 | 1 | 1 | 1 | | |
| 10 | 12208-PR3-000 | BOLT, SEALING, 20MM ..... | 1 | 1 | 1 | 1 | | |
| 11 | 32101-MEL-000 | SUB HARNESS, ENGINE ..... | 1 | 1 | - | - | | |
| | 32101-MEL-D20 | ..... | - | - | 1 | 1 | | |
| 12 | 32120-MEL-000 | BRACKET COMP., CONNECTOR .... | 1 | - | - | - | -------- -------- | F,G |
| | 32120-MEL-010 | ..... | 1 | - | - | - | -------- -------- | BR,E,ED,KO,MX,U |
| | 32120-MEL-D00 | ..... | - | 1 | - | - | | |
| 13 | 35600-HA0-003 | SWITCH ASSY., NEUTRAL (TOYO) | 1 | 1 | 1 | 1 | | |
| 14 | 37240-P13-013 | SWITCH ASSY., OIL PRESSURE (DENSO) | 1 | 1 | 1 | 1 | | |
| 15 | 37700-MEL-000 | SENSOR ASSY., SPEED ..... | 1 | 1 | - | - | | |
| | 37700-MEL-D21 | ..... | - | - | 1 | 1 | | |
| 16 | 90002-PA6-003 | BOLT-WASHER, 4X8(DENSO) ..... | 1 | 1 | 1 | 1 | | |
| 17 | 90004-MEL-000 | BOLT, SPECIAL, 7X42.5 ..... | 1 | 1 | - | - | | |
| | 90004-MFA-D00 | ..... | - | - | 1 | 1 | | |
| 18 | 90008-MEL-000 | BOLT, SOCKET, 10MM ..... | 1 | 1 | - | - | | |

# CRANKCASE



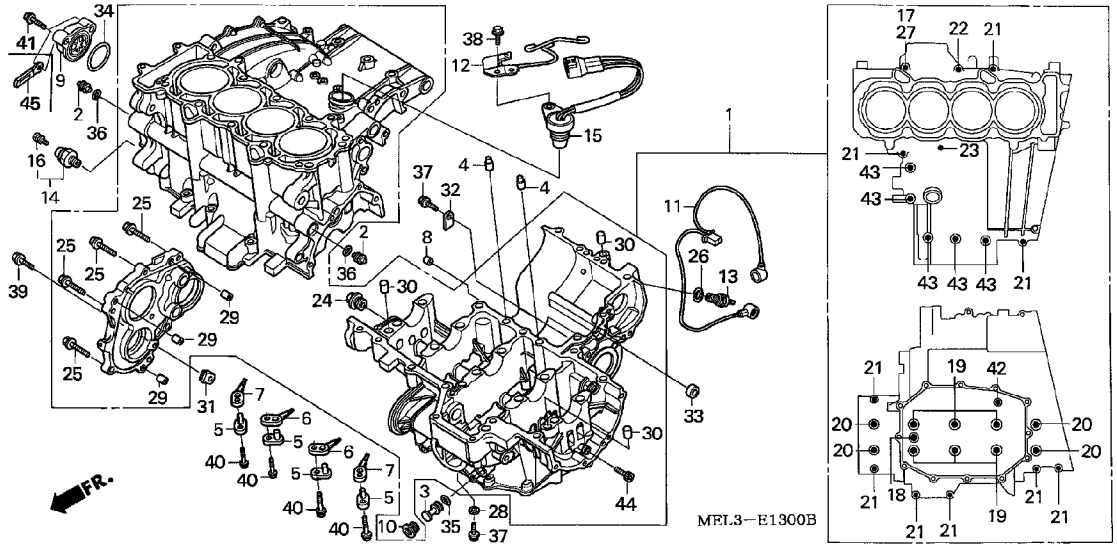


| Ref. No. | Part No. | Description | Reqd. QTY CBR1000RR 4 | 5 | 6 | 7 | Serial No. | Parts catalogue code |
|---|---|---|---|---|---|---|---|---|
| 18) | 90005-MAZ-000 | BOLT, SOCKET, 10MM | - | - | 1 | 1 | | |
| 19 | 90015-MEL-003 | BOLT, FLANGE, 9X105 | 6 | 6 | 6 | 6 | | |
| 20 | 90016-MEL-003 | BOLT, FLANGE, 9X125 | 4 | 4 | 4 | 4 | | |
| 21 | 90017-MAT-000 | BOLT, FLANGE, 7X40 | 9 | 9 | - | - | | |
| | 90019-MFA-D00 | | - | - | 9 | 9 | | |
| 22 | 90017-MEL-000 | BOLT, FLANGE, 7X60 | 1 | 1 | - | - | | |
| | 90017-MFA-D00 | | - | - | 1 | 1 | | |
| 23 | 90018-MEL-000 | BOLT, FLANGE, 7X80 | 1 | 1 | - | - | | |
| | 90018-MFA-D00 | | - | - | 1 | 1 | | |
| 24 | 90048-MEL-000 | BOLT, SEALING, 22MM | 1 | 1 | - | - | | |
| | 90048-MEL-D20 | | - | - | 1 | 1 | | |
| 25 | 90133-MEL-000 | BOLT, FLANGE, 8X30 | 6 | 6 | 6 | 6 | | |
| 26 | 90443-MJ6-000 | WASHER, NEUTRAL | 1 | 1 | 1 | 1 | | |
| 27 | 90447-KE1-000 | WASHER, SEALING, 7MM | 1 | 1 | 1 | 1 | | |
| 28 | 90463-ML7-000 | WASHER, SEALING, 6.5MM | 1 | 1 | 1 | 1 | | |
| 29 | 90701-MEL-000 | DOWEL PIN, 8X14 | 3 | 3 | 3 | 3 | | |
| 30 | 90701-MV9-670 | DOWEL PIN, 10X16 | 3 | 3 | 3 | 3 | | |
| 31 | 91011-MEL-000 | PLATE A, BEARING SETTING | 1 | 1 | 1 | 1 | | |
| 32 | 91012-MEL-000 | PLATE B, BEARING SETTING | 1 | 1 | 1 | 1 | | |
| 33 | 91202-MEL-003 | OIL SEAL, 8X16X7 | 1 | 1 | 1 | 1 | | |
| 34 | 91301-MEE-003 | O-RING, 32X1.7 | 1 | 1 | 1 | 1 | | |
| 35 | 91302-ZE9-000 | O-RING, 11.8X2.4 | 1 | 1 | 1 | 1 | | |
| 36 | 91303-377-000 | O-RING, 13.8X2.5 | 2 | 2 | 2 | 2 | | |
| 37 | 95701-06014-00 | BOLT, FLANGE, 6X14 | 2 | 2 | 2 | 2 | | |
| 38 | 95701-06018-00 | BOLT, FLANGE, 6X18 | 1 | 1 | 1 | 1 | | |

# CRANKCASE



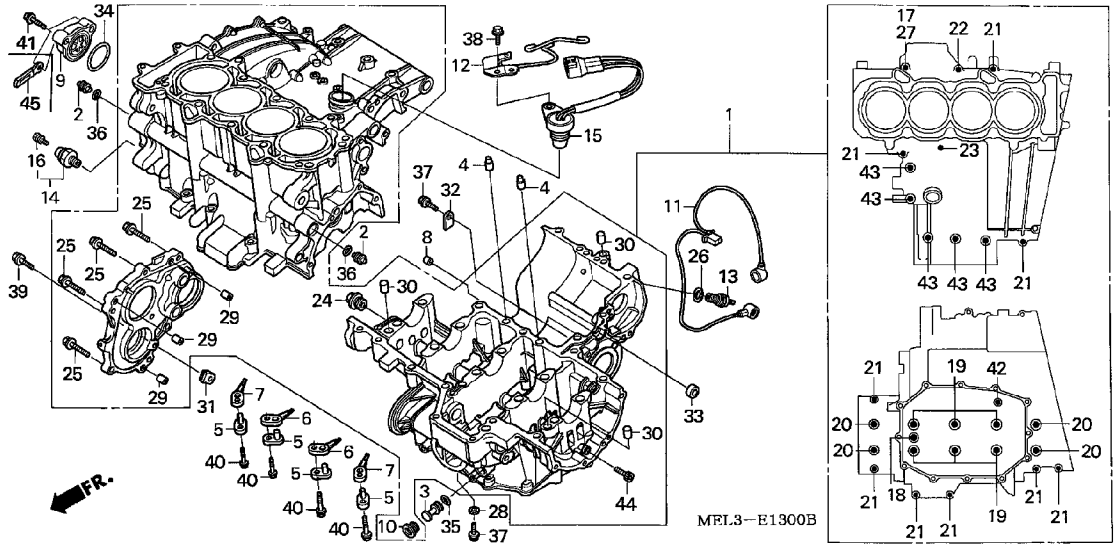


| Ref. No. | Part No. | Description | Reqd. QTY CBR1000RR 4 | 5 | 6 | 7 | Serial No. | Parts catalogue code |
|---|---|---|---|---|---|---|---|---|
| 39 | 95701-06020-00 | BOLT, FLANGE, 6X20 | 1 | 1 | 1 | 1 | | |
| 40 | 95701-06025-00 | BOLT, FLANGE, 6X25 | 4 | 4 | 4 | 4 | | |
| 41 | 95701-06028-00 | BOLT, FLANGE, 6X28 | 2 | 2 | - | - | | |
| | 90020-MFA-D00 | | - | - | 2 | 2 | | |
| 42 | 95701-08040-00 | BOLT, FLANGE, 8X40 | 1 | 1 | 1 | 1 | | |
| 43 | 95701-08055-00 | BOLT, FLANGE, 8X55 | 5 | 5 | - | - | | |
| | 90001-MFA-D00 | | - | - | 5 | 5 | | |
| 44 | 90010-MEL-000 | BOLT, SOCKET, 8X12 | 1 | 1 | 1 | 1 | | |
| 45 | 91410-679-000 | CLIP, 2X60 | - | - | 1 | 1 | | |

# CRANKSHAFT/PISTON



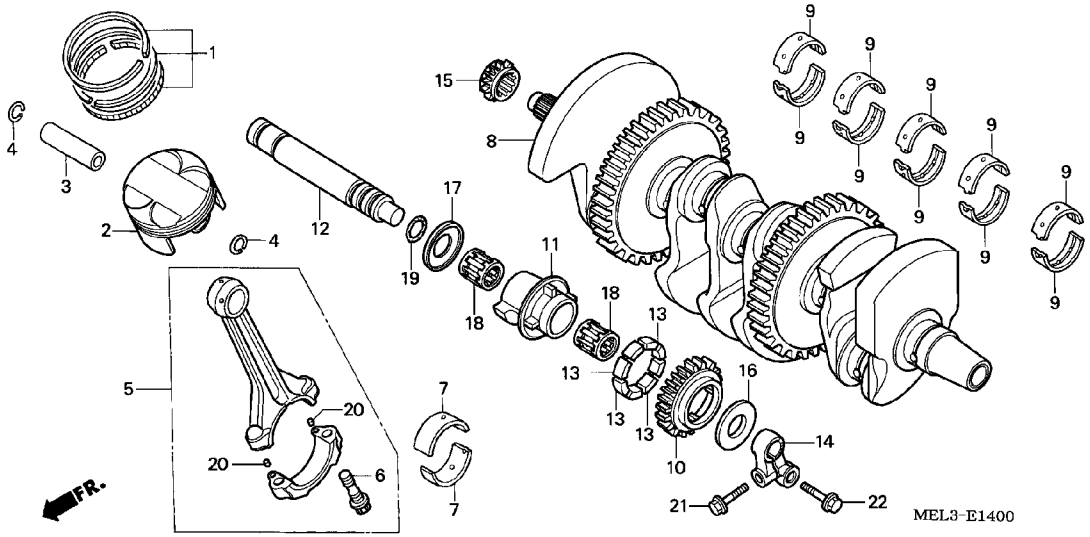


| Ref. No. | L.O.N. | (Relative ref. Number) Description | F.R.T. |
|---|---|---|---|
| 2 | | (1,3,4,5,7) | |
| | 1111T9 | PISTON AND/OR RING SET AND/OR BEARING AND/OR ROD ····· | 7.8 |
| | | .INCLUDES: Engine removal and installation | |
| | | .INCLUDES: Inspection/ Measurement/Cleaning | |
| | 1111T9B | .With 1 cylinder add ····· | 0.4 |
| | 1111T9C | .With 2 cylinder add ····· | 0.8 |
| | 1111X9 | PISTON AND/OR RING SET AND/OR BEARING AND/OR ROD :FOR 1 VEHICLE ····· | 9.0 |
| | | .INCLUDES: Engine removal and installation | |
| | | .INCLUDES: Inspection/ Measurement/Cleaning | |
| 8 | 1101B5 | CRANKSHAFT ····· | 8.6 |
| | | .INCLUDES: Engine removal and installation | |
| 9 | 110125 | BEARING, CRANKSHAFT ····· | 7.9 |
| | | .INCLUDES: Engine removal and installation | |
| | | .NOTE: Same time for two units or more | |

| Ref. No. | Part No. | Description | Reqd. QTY CBR1000RR 4 | 5 | 6 | 7 | Serial No. | Parts catalogue code |
|---|---|---|---|---|---|---|---|---|
| 1 | 13031-MEL-010 | RING SET, PISTON (STD.) ····· | 4 | 4 | - | - | | |
| | 13041-MEL-010 | RING SET, PISTON (OS 0.25) ·· | (4) | (4) | - | - | | |
| | 13031-MEL-D20 | RING SET, PISTON (STD.) ····· | - | - | 4 | 4 | | |
| | 13041-MEL-D20 | RING SET, PISTON (OS 0.25) ·· | - | - | (4) | (4) | | |
| 2 | 13101-MEL-000 | PISTON (STD.) ····· | 4 | - | - | - | | |
| | | | - | 4 | - | - | -------- 2127075 | |
| | 13103-MEL-000 | PISTON (O.S. 0.25) ····· | (4) | (4) | - | - | | |
| | 13101-MEL-010 | PISTON (STD.) ····· | - | 4 | - | - | 2127076 | |
| | | | - | - | 4 | 4 | | |
| | 13103-MEL-010 | PISTON (O.S. 0.25) ····· | - | - | (4) | (4) | | |
| 3 | 13111-MEL-000 | PIN, PISTON ····· | 4 | 4 | 4 | 4 | | |
| 4 | 13112-MEL-000 | CLIP, PISTON PIN, 17MM ····· | 8 | 8 | 8 | 8 | | |
| 5 | 13210-MEL-000 | ROD ASSY., CONNECTING ····· | 4 | 4 | 4 | 4 | | |
| 6 | 13213-MEL-003 | BOLT, CONNECTING ROD ····· | 8 | 8 | 8 | 8 | | |
| 7 | 13214-MEL-003 | BEARING A, CONNECTING ROD (BLUE) | 8 | 8 | 8 | 8 | | |
| | 13215-MEL-003 | BEARING B, CONNECTING ROD (BLACK) | 8 | 8 | 8 | 8 | | |
| | 13216-MEL-003 | BEARING C, CONNECTING ROD (BROWN) | 8 | 8 | 8 | 8 | | |
| | 13217-MEL-003 | BEARING D, CONNECTING ROD (GREEN) | 8 | 8 | 8 | 8 | | |
| | 13218-MEL-003 | BEARING E, CONNECTING ROD (YELLOW) | 8 | 8 | 8 | 8 | | |
| 8 | 13310-MEL-020 | CRANKSHAFT ····· | 1 | 1 | - | - | | |
| | 13310-MEL-D20 | ····· | - | - | 1 | 1 | | |
| 9 | 13314-MEL-003 | BEARING B, CRANKSHAFT (BROWN) | 10 | 10 | 10 | 10 | | |
| | 13315-MEL-003 | BEARING C, CRANKSHAFT (GREEN) | 10 | 10 | 10 | 10 | | |

# CRANKSHAFT/PISTON



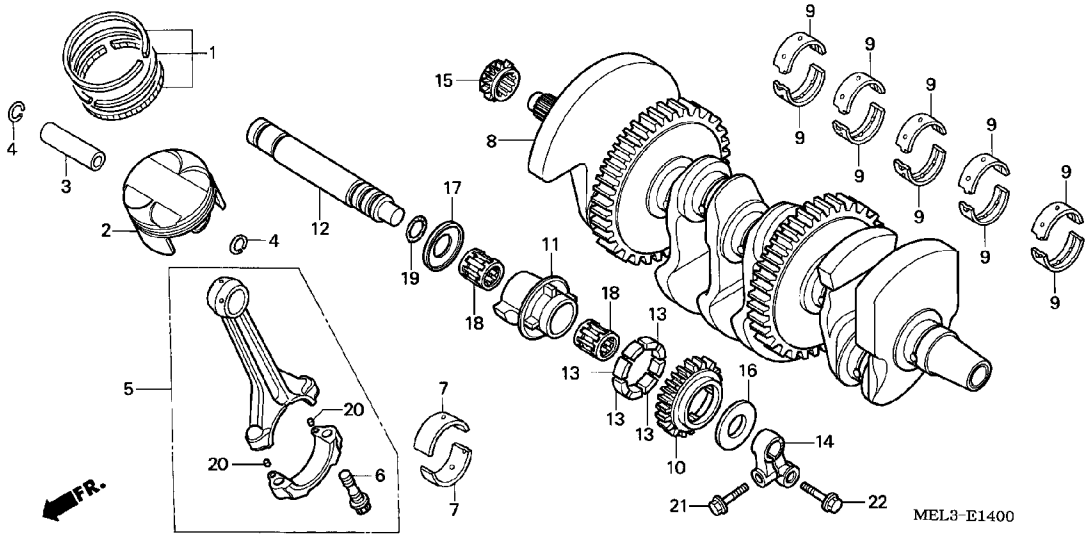


| Ref. No. | L.O.N. | (Relative ref. Number) Description | F.R.T. |
|---|---|---|---|
| 10 | | (11,13,18) | |
| | 1101C4 | GEAR, BALANCER ····· | 5.9 |
| | | .INCLUDES: Engine removal and installation | |
| 12 | 110185 | SHAFT, BALANCER ····· | 5.9 |
| | | .INCLUDES: Engine removal and installation | |
| 15 | 1101C8 | SPROCKET, TIMING ····· | 4.3 |

| Ref. No. | Part No. | Description | Reqd. QTY CBR1000RR 4 | 5 | 6 | 7 | Serial No. | Parts catalogue code |
|---|---|---|---|---|---|---|---|---|
| (9) | 13316-MEL-003 | BEARING D, CRANKSHAFT (YELLOW) | 10 | 10 | 10 | 10 | | |
| | 13317-MEL-003 | BEARING E, CRANKSHAFT (PINK) | 10 | 10 | 10 | 10 | | |
| | 13318-MEL-003 | BEARING F, CRANKSHAFT (RED) · | 10 | 10 | 10 | 10 | | |
| 10 | 13421-MEL-000 | GEAR, BALANCER (26T) ····· | 1 | 1 | - | - | | |
| | 13421-MEL-D20 | ····· | - | - | 1 | 1 | | |
| 11 | 13430-MEL-000 | WEIGHT, BALANCER ····· | 1 | 1 | 1 | 1 | | |
| 12 | 13431-MEL-000 | SHAFT, BALANCER ····· | 1 | 1 | 1 | 1 | | |
| 13 | 13435-MAT-000 | RUBBER, DAMPER ····· | 4 | 4 | 4 | 4 | | |
| 14 | 13436-MM5-000 | HOLDER, BALANCER SHAFT ····· | 1 | 1 | 1 | 1 | | |
| 15 | 14312-MEL-000 | SPROCKET, TIMING (17T) ····· | 1 | 1 | 1 | 1 | | |
| 16 | 90457-MAT-000 | WASHER A, BALANCER SIDE ····· | 1 | 1 | 1 | 1 | | |
| 17 | 90458-MAT-000 | WASHER B, BALANCER SIDE ····· | 1 | 1 | 1 | 1 | | |
| 18 | 91015-MEL-003 | BEARING B, NEEDLE, 18X27X23.8 (BLUE) | 2 | 2 | 2 | 2 | | |
| | 91016-MEL-003 | BEARING C, NEEDLE, 18X27X23.8 (WHITE) | 2 | 2 | 2 | 2 | | |
| | 91017-MEL-003 | BEARING D, NEEDLE, 18X27X23.8 (GREEN) | 2 | 2 | 2 | 2 | | |
| 19 | 91302-377-000 | O-RING, 15X2.5 ····· | 1 | 1 | 1 | 1 | | |
| 20 | 94303-04065 | PIN C, DOWEL, 4X6.5 ····· | 8 | 8 | 8 | 8 | | |
| 21 | 95701-06018-00 | BOLT, FLANGE, 6X18 ····· | 1 | 1 | - | - | | |
| | 90002-MCZ-000 | ····· | - | - | 1 | 1 | | |
| 22 | 95701-08025-00 | BOLT, FLANGE, 8X25 ····· | 1 | 1 | - | - | | |
| | 90022-MFA-D00 | ····· | - | - | 1 | 1 | | |

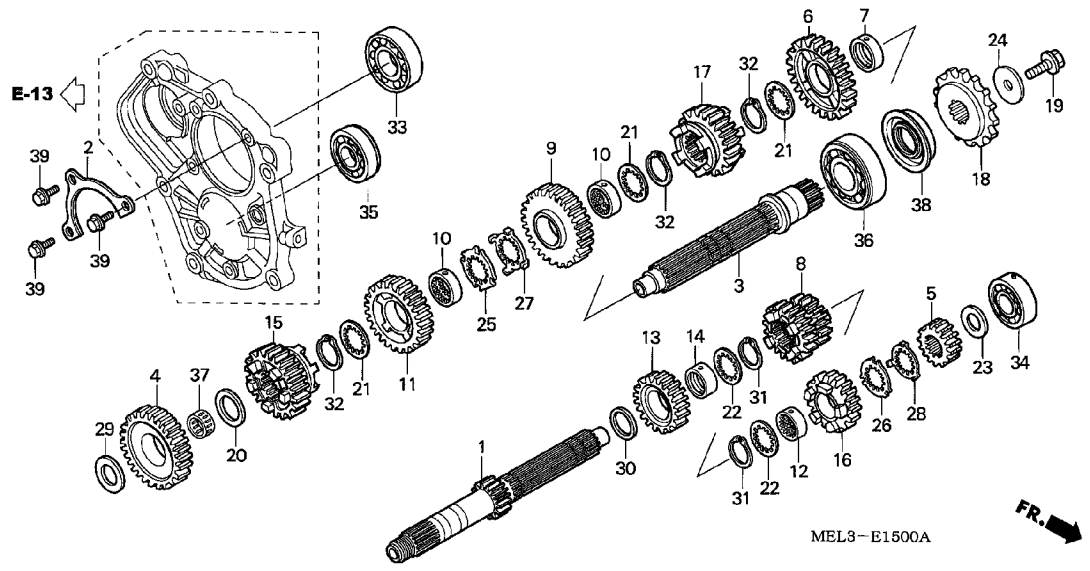


| Ref. No. | L.O.N. | (Relative ref. Number) Description | F.R.T. |
|---|---|---|---|
| 1 | | (5,8,13,16) | |
| | 210141 | MAINSHAFT, TRANSMISSION ····· | 2.5 |
| | 210141A | .Replace countershaft add ···· | 0.2 |
| 3 | | (4,6,9,11,15,17) | |
| | 210142 | COUNTERSHAFT, TRANSMISSION ··· | 2.5 |
| | 210142A | .Replace mainshaft add ····· | 0.2 |
| 18 | 213135 | SPROCKET, DRIVE ····· | 0.4 |
| 33 | 2101C5 | BEARING, MAINSHAFT :RIGHT ···· | 2.5 |
| | 2101C6 | BEARING, MAINSHAFT :BOTH ····· | 5.9 |
| | | .INCLUDES: Engine removal and installation | |
| | 2101D4 | BEARING, MAINSHAFT AND COUNTERSHAFT :ALL ····· | 6.2 |
| | | .INCLUDES: Engine removal and installation | |
| 34 | 2101C2 | BEARING, MAINSHAFT :LEFT ····· | 5.7 |
| | | .INCLUDES: Engine removal and installation | |
| | 2101C6 | BEARING, MAINSHAFT :BOTH ····· | 5.9 |
| | | .INCLUDES: Engine removal and installation | |
| | 2101D4 | BEARING, MAINSHAFT AND COUNTERSHAFT :ALL ····· | 6.2 |
| | | .INCLUDES: Engine removal and installation | |

| Ref. No. | Part No. | Description | Reqd. QTY CBR1000RR 4 | 5 | 6 | 7 | Serial No. | Parts catalogue code |
|---|---|---|---|---|---|---|---|---|
| 1 | 23211-MEL-000 | MAINSHAFT (13T) ····· | 1 | 1 | - | - | | |
| | 23211-MEL-D20 | ····· | - | - | 1 | 1 | | |
| 2 | 23212-MEL-000 | PLATE, BEARING SETTING ····· | 1 | 1 | - | - | | |
| | 23212-MEL-D20 | ····· | - | - | 1 | 1 | | |
| 3 | 23220-MEL-000 | COUNTERSHAFT COMP. ····· | 1 | 1 | 1 | 1 | | |
| 4 | 23421-MEL-000 | GEAR, COUNTERSHAFT FIRST (33T) | 1 | 1 | 1 | 1 | | |
| 5 | 23431-MEL-000 | GEAR, MAINSHAFT SECOND (17T) | 1 | 1 | 1 | 1 | | |
| 6 | 23441-MEL-000 | GEAR, COUNTERSHAFT SECOND (33T) | 1 | 1 | - | - | | |
| | 23441-MEL-D20 | ····· | - | - | 1 | 1 | | |
| 7 | 23442-MCJ-000 | COLLAR, 30X9.5 ····· | 1 | 1 | 1 | 1 | | |
| 8 | 23451-MEL-000 | GEAR, MAINSHAFT THIRD & FOURTH (19T/21T) | 1 | 1 | - | - | | |
| | 23451-MEL-D20 | ····· | - | - | 1 | 1 | | |
| 9 | 23461-MEL-000 | GEAR, COUNTERSHAFT THIRD (30T) | 1 | 1 | - | - | | |
| | 23461-MEL-D20 | ····· | - | - | 1 | 1 | | |
| 10 | 23462-MAT-000 | COLLAR, SPLINE, 30X11 ····· | 2 | 2 | 2 | 2 | | |
| 11 | 23481-MEL-000 | GEAR, COUNTERSHAFT FOURTH (29T) | 1 | 1 | - | - | | |
| | 23481-MEL-D20 | ····· | - | - | 1 | 1 | | |
| 12 | 23482-MCJ-000 | COLLAR, SPLINE, 28X16 ····· | 1 | 1 | - | - | | |
| | 23482-MR7-000 | COLLAR, SPLINE, 28X13.5 ····· | - | - | 1 | 1 | | |
| 13 | 23491-MEL-000 | GEAR, MAINSHAFT FIFTH (20T) · | 1 | 1 | - | - | | |
| | 23491-MEL-D20 | ····· | - | - | 1 | 1 | | |
| 14 | 23495-MM5-000 | COLLAR, 28X13 ····· | 1 | 1 | 1 | 1 | | |
| 15 | 23501-MEL-000 | GEAR, COUNTERSHAFT FIFTH (25T) | 1 | 1 | - | - | | |
| | 23501-MEL-D20 | ····· | - | - | 1 | 1 | | |

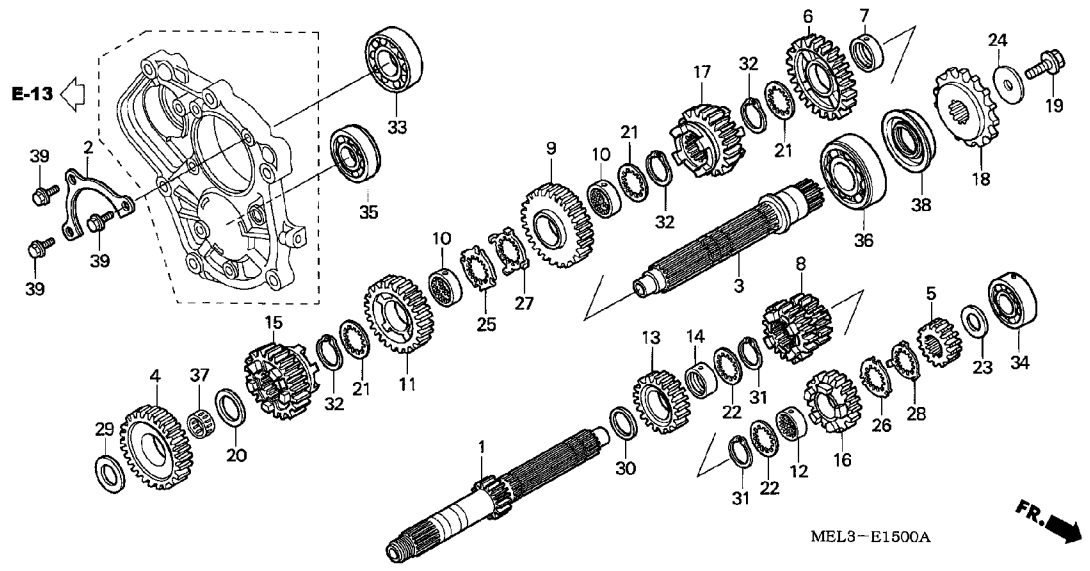


| Ref. No. | L.O.N. | (Relative ref. Number) Description | F.R.T. |
|---|---|---|---|
| 35 | 2101C8 | BEARING, COUNTERSHAFT :RIGHT · | 2.5 |
| | 2101C9 | BEARING, COUNTERSHAFT :BOTH ·· | 6.1 |
| | | .INCLUDES: Engine removal and installation | |
| | 2101D4 | BEARING, MAINSHAFT AND COUNTERSHAFT :ALL ····· | 6.2 |
| | | .INCLUDES: Engine removal and installation | |
| 36 | 2101C7 | BEARING, COUNTERSHAFT :LEFT ·· | 5.9 |
| | | .INCLUDES: Engine removal and installation | |
| | 2101C9 | BEARING, COUNTERSHAFT :BOTH ·· | 6.1 |
| | | .INCLUDES: Engine removal and installation | |
| | 2101D4 | BEARING, MAINSHAFT AND COUNTERSHAFT :ALL ····· | 6.2 |
| | | .INCLUDES: Engine removal and installation | |
| 38 | 2101G7 | OIL SEAL, COUNTERSHAFT :LEFT · | 5.9 |
| | | .INCLUDES: Engine removal and installation | |

| Ref. No. | Part No. | Description | Reqd. QTY CBR1000RR 4 | 5 | 6 | 7 | Serial No. | Parts catalogue code |
|---|---|---|---|---|---|---|---|---|
| 16 | 23511-MEL-000 | GEAR, MAINSHAFT SIXTH (25T) · | 1 | 1 | - | - | | |
| | 23511-MEL-D20 | ····· | - | - | 1 | 1 | | |
| 17 | 23521-MEL-000 | GEAR, COUNTERSHAFT SIXTH (29T) | 1 | 1 | - | - | | |
| | 23521-MEL-D20 | ····· | - | - | 1 | 1 | | |
| 18 | 23801-MCJ-750 | SPROCKET, DRIVE (16T) ····· | 1 | 1 | 1 | 1 | | |
| 19 | 90037-422-003 | BOLT, SPECIAL, 10MM ····· | 1 | 1 | 1 | 1 | | |
| 20 | 90402-HA5-000 | WASHER, THRUST, 24MM ····· | 1 | 1 | 1 | 1 | | |
| 21 | 90452-MAT-000 | WASHER, SPLINE, 30X36X1.5 ··· | 3 | 3 | 3 | 3 | | |
| 22 | 90452-MR7-000 | WASHER, SPLINE, 28X34X1.5 ··· | 2 | 2 | 2 | 2 | | |
| 23 | 90554-MEL-000 | WASHER, THRUST, 20MM ····· | 1 | 1 | 1 | 1 | | |
| 24 | 90459-438-000 | WASHER, 10.2MM ····· | 1 | 1 | 1 | 1 | | |
| 25 | 90463-MAT-000 | WASHER, SPLINE, 30MM ····· | 1 | 1 | 1 | 1 | | |
| 26 | 90463-MCJ-000 | WASHER, SPLINE, 28MM ····· | 1 | 1 | 1 | 1 | | |
| 27 | 90464-MAT-000 | WASHER, LOCK, 30MM ····· | 1 | 1 | 1 | 1 | | |
| 28 | 90464-MCJ-000 | WASHER, LOCK, 28MM ····· | 1 | 1 | 1 | 1 | | |
| 29 | 90469-759-000 | SHIM J, FINAL REDUCTION THIRD GEAR (2.0MM) | 1 | 1 | 1 | 1 | | |
| 30 | 90458-729-920 | WASHER, THRUST, 28MM ····· | 1 | 1 | 1 | 1 | | |
| 31 | 90603-MN4-000 | CIRCLIP, 28MM ····· | 2 | 2 | 2 | 2 | | |
| 32 | 90604-MM5-000 | CIRCLIP, 30MM ····· | 3 | 3 | 3 | 3 | | |
| 33 | 91001-MEL-003 | BEARING, RADIAL BALL, 28X62X16 | 1 | 1 | 1 | 1 | | |
| 34 | 91002-MEL-003 | BEARING, SPECIAL, 20X47X15.5 | 1 | 1 | 1 | 1 | | |
| 35 | 91003-MEL-003 | BEARING, SPECIAL, 20X52X15 ·· | 1 | 1 | 1 | 1 | | |
| 36 | 91004-MEL-003 | BEARING, SPECIAL BALL, 35X72X17 | 1 | 1 | 1 | 1 | | |

# TRANSMISSION



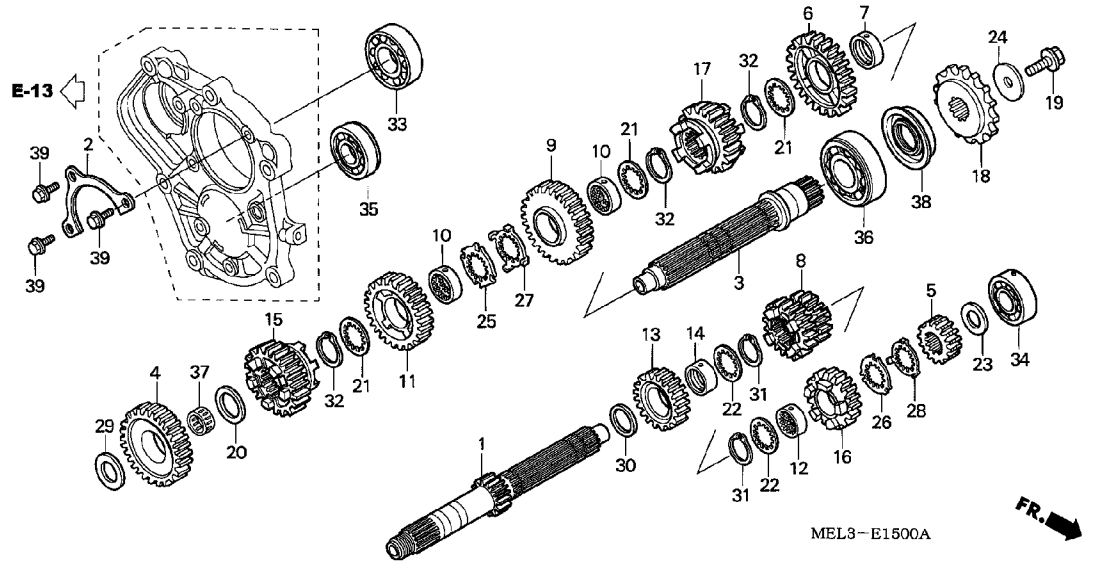


| Ref. No. | Part No. | Description | Reqd. QTY CBR1000RR 4 | 5 | 6 | 7 | Serial No. | Parts catalogue code |
|---|---|---|---|---|---|---|---|---|
| 37 | 91026-MEL-003 | BEARING, NEEDLE, 24X28X10 --- | 1 | 1 | 1 | 1 | | |
| 38 | 91201-MEL-013 | OIL SEAL, 34.8X53X8 --------- | 1 | 1 | 1 | 1 | | |
| 39 | 95701-06012-00 | BOLT, FLANGE, 6X12 ---------- | 3 | 3 | 3 | 3 | | |

# GEARSHIFT DRUM



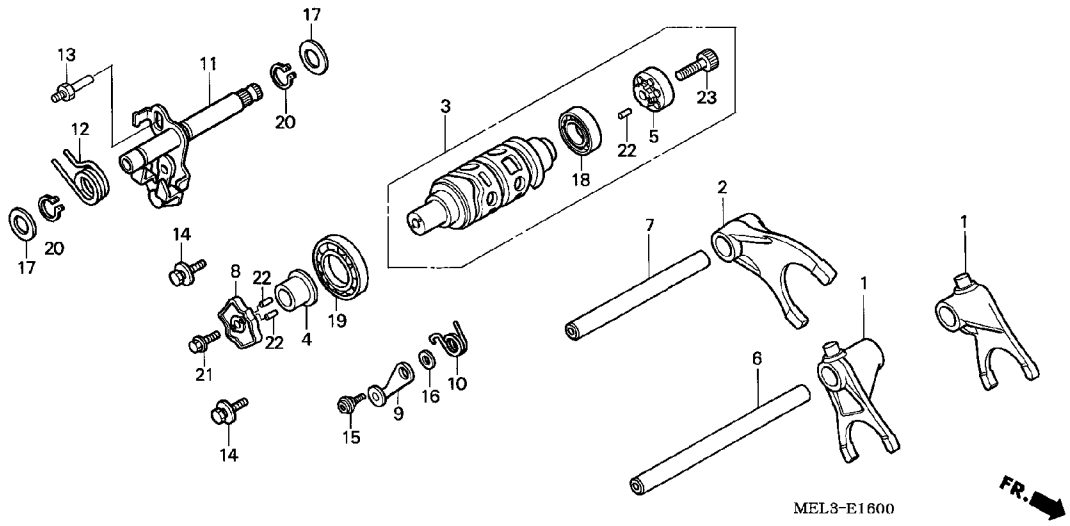


| Ref. No. | L.O.N. | (Relative ref. Number) Description | F.R.T. |
|---|---|---|---|
| 1 | | (2,6,7) | |
| | 210112 | FORK, GEARSHIFT ---------- | 2.2 |
| | | .NOTE: Same time for two units or more | |
| 3 | | (18,19) | |
| | 2101A9 | DRUM, GEARSHIFT ---------- | 2.4 |
| 5 | 2101B2 | CENTER, GEARSHIFT DRUM ------- | 0.8 |
| 8 | 2101D6 | PLATE, GEARSHIFT DRUM STOPPER | 1.3 |
| | 2101D6D | .'06 model add ---------- | 0.1 |
| | 2101D6E | .'07 model add ---------- | 0.1 |
| 9 | | (10) | |
| | 210125 | STOPPER OR SPRING, SHIFT DRUM | 1.1 |
| | 210125F | .'06 model add ---------- | 0.1 |
| | 210125G | .'07 model add ---------- | 0.1 |
| 11 | | (12) | |
| | 210122 | SPINDLE, GEARSHIFT ---------- | 0.8 |

| Ref. No. | Part No. | Description | Reqd. QTY CBR1000RR 4 | 5 | 6 | 7 | Serial No. | Parts catalogue code |
|---|---|---|---|---|---|---|---|---|
| 1 | 24211-MEL-000 | FORK, GEARSHIFT ---------- | 2 | 2 | 2 | 2 | | |
| 2 | 24212-MEL-000 | FORK, CENTER GEARSHIFT ------ | 1 | 1 | 1 | 1 | | |
| 3 | 24310-MEL-000 | DRUM COMP., GEARSHIFT ------- | 1 | 1 | - | - | | |
| | 24310-MEL-D20 | ---------- | - | - | 1 | 1 | | |
| 4 | 24314-MEL-000 | COLLAR, SHIFT DRUM ---------- | 1 | 1 | - | - | | |
| | 24314-MEL-D20 | ---------- | - | - | 1 | 1 | | |
| 5 | 24315-MEL-300 | CENTER COMP., SHIFT DRUM ---- | 1 | 1 | 1 | 1 | | |
| 6 | 24321-MEL-000 | SHAFT A, GEARSHIFT FORK ----- | 1 | 1 | - | - | | |
| | 24321-MFA-D00 | ---------- | - | - | 1 | 1 | | |
| 7 | 24322-MEL-000 | SHAFT B, GEARSHIFT FORK ----- | 1 | 1 | 1 | 1 | | |
| 8 | 24411-MEL-003 | PLATE, GEARSHIFT DRUM STOPPER | 1 | 1 | 1 | 1 | | |
| 9 | 24430-KK0-000 | STOPPER COMP., GEARSHIFT DRUM | 1 | 1 | 1 | 1 | | |
| 10 | 24435-MEL-000 | SPRING, GEARSHIFT DRUM STOPPER | 1 | 1 | 1 | 1 | | |
| 11 | 24610-MEL-000 | SPINDLE COMP., GEARSHIFT ---- | 1 | 1 | - | - | | |
| | | | - | - | 1 | - | -------- 2216465 | KO |
| | 24610-MFA-D00 | ---------- | - | - | 1 | - | -------- -------- | BR,E,ED,EK,F,MX,U |
| | | | - | - | 1 | - | 2216466 -------- | KO |
| | | | - | - | - | 1 | | |
| 12 | 24651-MBB-000 | SPRING, SHIFT RETURN -------- | 1 | 1 | 1 | 1 | | |
| 13 | 24652-035-000 | PIN, SHIFT RETURN SPRING ---- | 1 | 1 | 1 | 1 | | |
| 14 | 90021-MM5-000 | BOLT-WASHER, 6X12 ---------- | 2 | 2 | 2 | 2 | | |
| 15 | 90022-MY5-600 | PIVOT, SHIFT DRUM STOPPER ARM | 1 | 1 | 1 | 1 | | |
| 16 | 90417-360-000 | WASHER, DRUM STOPPER -------- | 1 | 1 | 1 | 1 | | |
| 17 | 90451-155-000 | WASHER, 14MM ---------- | 2 | 2 | 2 | 2 | | |
| 18 | 91002-MG8-003 | BEARING, RADIAL BALL, 6804 (KOYO) | 1 | 1 | 1 | 1 | | |

# GEARSHIFT DRUM



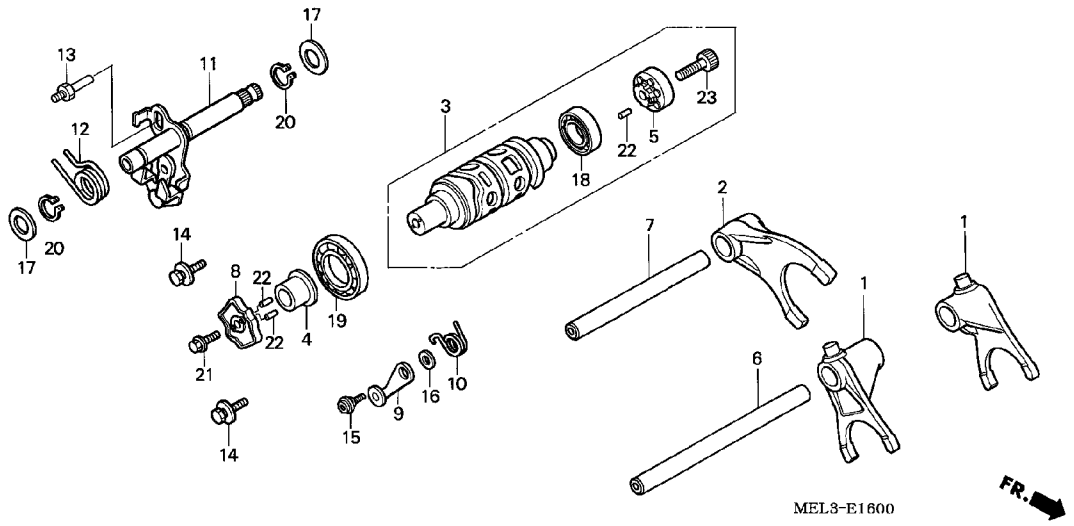


| Ref. No. | Part No. | Description | Reqd. QTY CBR1000RR 4 | 5 | 6 | 7 | Serial No. | Parts catalogue code |
|---|---|---|---|---|---|---|---|---|
| 19 | 91008-374-003 | BEARING, BALL, 16005(NTN) --- | 1 | 1 | 1 | 1 | | |
| 20 | 94510-14000 | CIRCLIP, EXTERNAL, 14MM ----- | 2 | 2 | 2 | 2 | | |
| 21 | 95701-06016-00 | BOLT, FLANGE, 6X16 ---------- | 1 | 1 | 1 | 1 | | |
| 22 | 96220-30080 | ROLLER, 3X8 ---------- | 3 | 3 | 3 | 3 | | |
| 23 | 96600-08020-10 | BOLT, SOCKET, 8X20 ---------- | 1 | 1 | 1 | 1 | | |

# THERMOSTAT



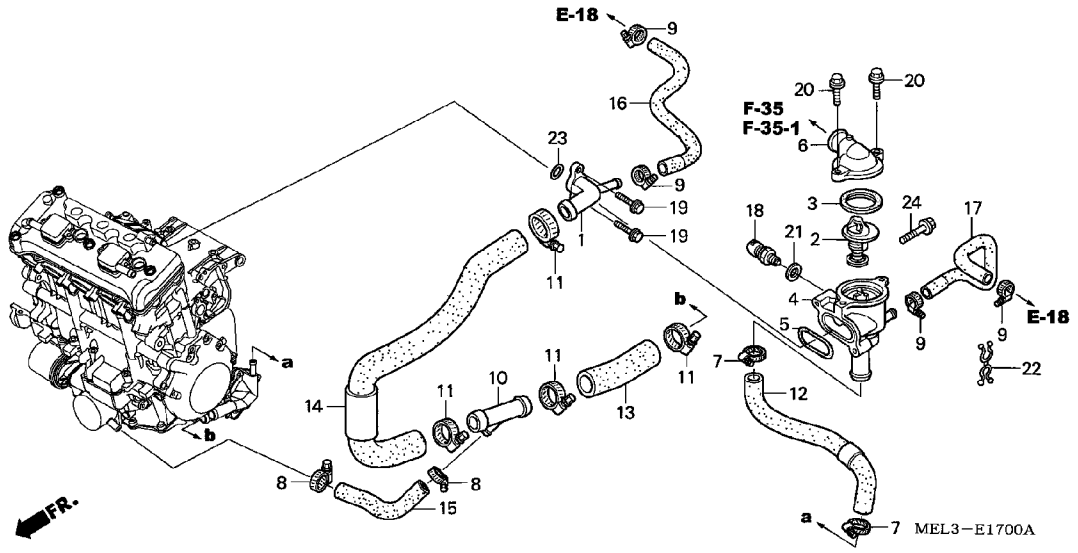


| Ref. No. | L.O.N. | (Relative ref. Number) Description | F.R.T. |
|---|---|---|---|
| 1 | 114150 | JOINT, WATER | 3.3 |
| | | .INCLUDES: Engine removal and installation | |
| 2 | 114116 | THERMOSTAT | 1.7 |
| | 114116C | .'06 model add | 0.1 |
| | 114116D | .'07 model add | 0.1 |
| 4 | 114117 | CASE, THERMOSTAT | 2.0 |
| | 114117A | .'06 model add | 0.1 |
| | 114117B | .'07 model add | 0.1 |
| 5 | 1141E8 | GASKET, THERMOSTAT CASE | 1.9 |
| | 1141E8A | .'06 model add | 0.1 |
| | 1141E8B | .'07 model add | 0.1 |
| 6 | | (3) | |
| | 1141B3 | COVER, THERMOSTAT | 1.6 |
| | 1141B3A | .'06 model add | 0.1 |
| | 1141B3B | .'07 model add | 0.1 |
| 12 | 1141B4 | HOSE, WATER BYPASS | 2.0 |
| | 1141B4A | .'06 model add | 0.1 |
| | 1141B4B | .'07 model add | 0.1 |
| 13 | 1141E9 | HOSE A, CYLINDER BLOCK | 0.7 |
| | 1141E9A | .'06 model add | 0.1 |
| | 1141E9B | .'07 model add | 0.1 |
| 14 | 1141F0 | HOSE B, CYLINDER BLOCK | 0.7 |
| | 1141F0A | .'06 model add | 0.1 |
| | 1141F0B | .'07 model add | 0.1 |

| Ref. No. | Part No. | Description | Reqd. QTY CBR1000RR 4 | 5 | 6 | 7 | Serial No. | Parts catalogue code |
|---|---|---|---|---|---|---|---|---|
| 1 | 19060-MEL-000 | JOINT, WATER | 1 | 1 | - | - | | |
| | 19060-MEL-D20 | | - | - | 1 | 1 | | |
| 2 | 19300-MCJ-003 | THERMOSTAT ASSY. | 1 | 1 | 1 | 1 | | |
| 3 | 19305-KV3-010 | RUBBER, THERMOSTAT | 1 | 1 | 1 | 1 | | |
| 4 | 19311-MCJ-305 | CASE, THERMOSTAT | 1 | - | - | - | | |
| | 19311-MEL-305 | | - | 1 | 1 | 1 | | |
| 5 | 19312-MBW-000 | GASKET, THERMOSTAT CASE | 1 | 1 | 1 | 1 | | |
| 6 | 19315-MEL-000 | COVER, THERMOSTAT | 1 | 1 | 1 | 1 | | |
| 7 | 19504-KY1-003 | CLAMP, WATER HOSE, 25MM | 2 | 2 | 2 | 2 | | |
| 8 | 19505-KS6-700 | CLAMP A, WATER HOSE | 2 | 2 | - | - | | |
| | 19504-KY1-003 | CLAMP, WATER HOSE, 25MM | - | - | 2 | 2 | | |
| 9 | 19507-MAT-000 | CLAMP, RADIATOR HOSE | 4 | 4 | 4 | 4 | | |
| 10 | 19507-MEE-000 | JOINT, HOSE THREE-WAY | 1 | 1 | - | - | | |
| | | | - | - | 1 | - | -------- -------- | KO |
| | 19082-MEL-D20 | | - | - | 1 | - | -------- -------- | BR,E,ED,EK,F,MX,U |
| | | | - | - | - | 1 | | |
| 11 | 19516-GAG-003 | CLAMP, HOSE, 30-37MM | 4 | 4 | 4 | 4 | | |
| 12 | 19523-MEL-000 | HOSE, BYPASS | 1 | 1 | 1 | 1 | | |
| 13 | 19524-MEL-000 | HOSE A, CYLINDER BLOCK | 1 | 1 | - | - | | |
| | 19524-MEL-D20 | | - | - | 1 | 1 | | |
| 14 | 19525-MEL-000 | HOSE B, CYLINDER BLOCK | 1 | 1 | - | - | | |
| | 19525-MEL-D20 | | - | - | 1 | 1 | | |
| 15 | 19526-MEL-000 | HOSE E, CYLINDER BLOCK | 1 | 1 | - | - | | |
| | | | - | - | 1 | - | -------- | 2227602 |
| | 19526-MEL-D20 | | - | - | 1 | - | 2227603 | |
| | | | - | - | - | 1 | | |

# THERMOSTAT



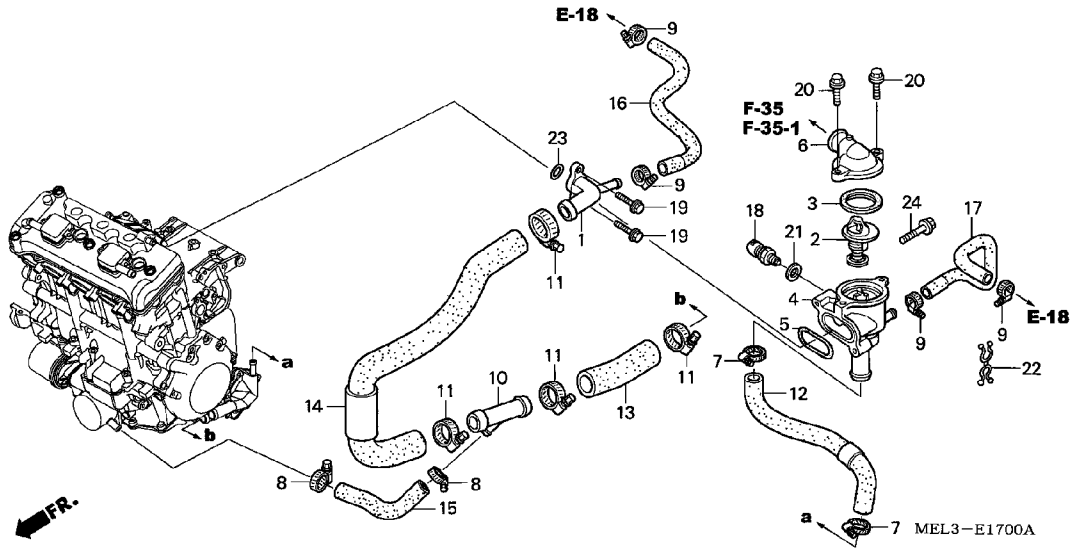


| Ref. No. | L.O.N. | (Relative ref. Number) Description | F.R.T. |
|---|---|---|---|
| 15 | 1141F1 | HOSE E, CYLINDER BLOCK ····· | 0.7 |
| | 1141F1A | .'06 model add ····· | 0.1 |
| | 1141F1B | .'07 model add ····· | 0.1 |
| 16 | 1141G9 | HOSE, WAX UNIT ····· | 1.1 |
| | 1141G9A | .'06 model add ····· | 0.1 |
| | 1141G9B | .'07 model add ····· | 0.1 |
| 17 | 1141C8 | HOSE, THERMOBODY ····· | 1.1 |
| | 1141C8A | .'06 model add ····· | 0.1 |
| | 1141C8B | .'07 model add ····· | 0.1 |
| 18 | 6171A9 | SENSOR, WATER TEMP ····· | 1.1 |
| | 6171A9C | .'06 model add ····· | 0.1 |
| | 6171A9D | .'07 model add ····· | 0.1 |

| Ref. No. | Part No. | Description | Reqd. QTY CBR1000RR 4 | 5 | 6 | 7 | Serial No. | Parts catalogue code |
|---|---|---|---|---|---|---|---|---|
| 16 | 19527-MEL-000 | HOSE C, WATER ····· | 1 | 1 | 1 | 1 | | |
| 17 | 19528-MEL-000 | HOSE D, WATER ····· | 1 | 1 | 1 | 1 | | |
| 18 | 37870-MBG-003 | SENSOR ASSY., WATER TEMP ···· | 1 | - | - | - | | |
| | 37870-KRJ-901 | ····· | - | 1 | 1 | 1 | | |
| 19 | 90010-GHB-650 | BOLT, FLANGE, 6X20 ····· | 2 | 2 | 2 | 2 | | |
| 20 | 90018-ZE1-000 | BOLT, FLANGE, 6X23(CT200) ··· | 2 | 2 | 2 | 2 | | |
| 21 | 90454-MC7-000 | WASHER, SPECIAL, 12MM ····· | 1 | 1 | 1 | 1 | | |
| 22 | 90658-SA0-003 | CLIP, WIRE HARNESS ····· | 1 | 1 | - | - | | |
| 23 | 91302-MEL-003 | O-RING, 24.5X2 ····· | 1 | 1 | 1 | 1 | | |
| 24 | 95701-06035-00 | BOLT, FLANGE, 6X35 ····· | 2 | 2 | 2 | 2 | | |

# THROTTLE BODY



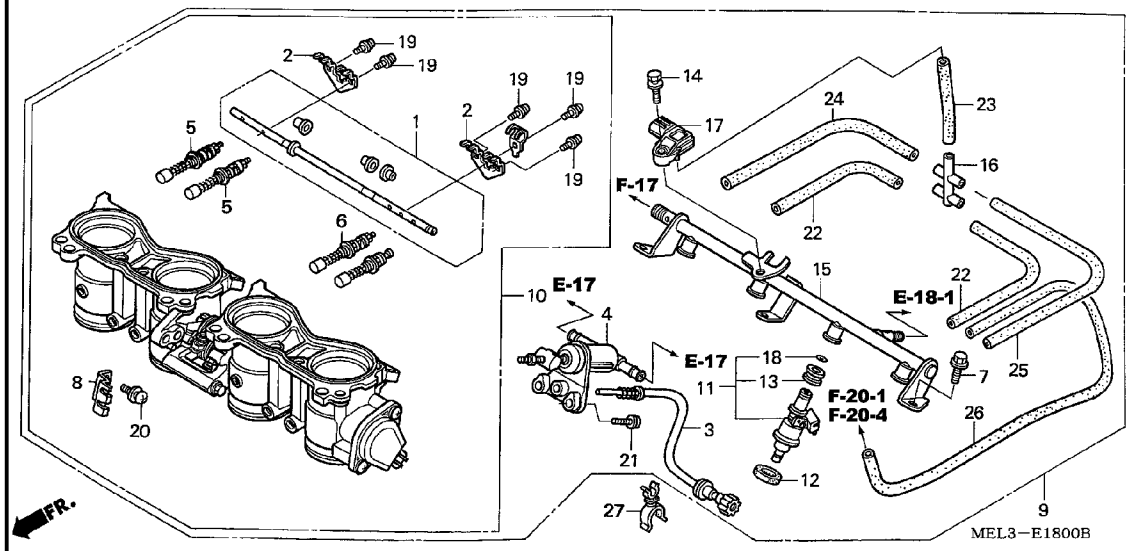


| Ref. No. | L.O.N. | (Relative ref. Number) Description | F.R.T. |
|---|---|---|---|
| 1 | | (2) | |
| | 3111A7 | SHAFT, STARTER ····· | 1.9 |
| 4 | 311128 | WAX UNIT, FAST IDLE ····· | 1.5 |
| 5 | | (6) | |
| | 311125 | VALVE, STARTER ····· | 1.9 |
| | | .NOTE: Same time for two units or more | |
| 9 | 311132 | BODY ASSY., THROTTLE ····· | 1.7 |
| 10 | 311130 | BODY, THROTTLE ····· | 1.9 |
| 11 | 3111E1 | INJECTOR, FUEL :PRIMARY ····· | 0.9 |
| | | .NOTE: Same time for two units or more | |
| 15 | | (12) | |
| | 3111D9 | PIPE, FUEL :LOWER ····· | 0.9 |
| | 3111C8 | PIPE, FUEL :BOTH ····· | 1.0 |
| 17 | 617116 | SENSOR, MAP ····· | 0.8 |

| Ref. No. | Part No. | Description | Reqd. QTY CBR1000RR 4 | 5 | 6 | 7 | Serial No. | Parts catalogue code |
|---|---|---|---|---|---|---|---|---|
| 1 | 16017-MEL-003 | SHAFT SET, STARTER ····· | 1 | 1 | 1 | 1 | | |
| 2 | 16018-MEE-003 | LEVER, STARTER ····· | 2 | 2 | 2 | 2 | | |
| 3 | 16029-MEL-003 | SCREW SET, STOP ····· | 1 | - | - | - | -------- -------- | BR,F,G,MX,U |
| | 16029-MEL-013 | ····· | 1 | - | - | - | -------- -------- | E,ED,KO |
| | | | - | 1 | - | - | | |
| | 16029-MEL-D21 | ····· | - | - | 1 | 1 | | |
| 4 | 16044-MCW-003 | WAX ASSY. ····· | 1 | 1 | 1 | 1 | | |
| 5 | 16046-MEE-003 | VALVE SET, STARTER ····· | 2 | 2 | 2 | 2 | | |
| 6 | 16046-MEL-003 | VALVE SET, STARTER ····· | 1 | 1 | 1 | 1 | | |
| 7 | 16080-MCJ-003 | BOLT, FLANGE, 6X12 ····· | 3 | 3 | 3 | 3 | | |
| 8 | 16169-MEL-003 | STAY, WIRE ····· | 1 | - | - | - | -------- -------- | BR,F,G,MX,U |
| | 16169-MEL-013 | ····· | 1 | - | - | - | -------- -------- | E,ED,KO |
| | | | - | 1 | 1 | 1 | | |
| 9 | 16400-MEL-003 | BODY ASSY., THROTTLE (GQAOA A) | 1 | - | - | - | -------- -------- | BR,F,G,MX,U |
| | 16400-MEL-013 | ····· | 1 | - | - | - | -------- -------- | E,ED,KO |
| | | | - | 1 | - | - | | |
| | 16400-MEL-D21 | BODY ASSY., THROTTLE (GQA1A A) | - | - | 1 | 1 | | |
| 10 | 16401-MEL-003 | THROTTLE BODY ASSY. ····· | 1 | - | - | - | -------- -------- | BR,F,G,MX,U |
| | 16401-MEL-013 | ····· | 1 | - | - | - | -------- -------- | E,ED,KO |
| | | | - | 1 | - | - | | |
| | 16401-MEL-D21 | ····· | - | - | 1 | 1 | | |
| 11 | 16450-MEL-003 | INJECTOR ASSY., FUEL ····· | 4 | 4 | 4 | 4 | | |
| 12 | 16472-MCW-000 | SEAL RING, INJECTOR ····· | 4 | 4 | 4 | 4 | | |
| 13 | 16473-P7A-004 | CUSHION RING, INJECTOR ····· | 4 | 4 | 4 | 4 | | |
| 14 | 16542-MEL-003 | BOLT-WASHER, 6X18 ····· | 1 | 1 | 1 | 1 | | |
| 15 | 16610-MEL-003 | PIPE COMP., FUEL ····· | 1 | 1 | 1 | 1 | | |

# THROTTLE BODY



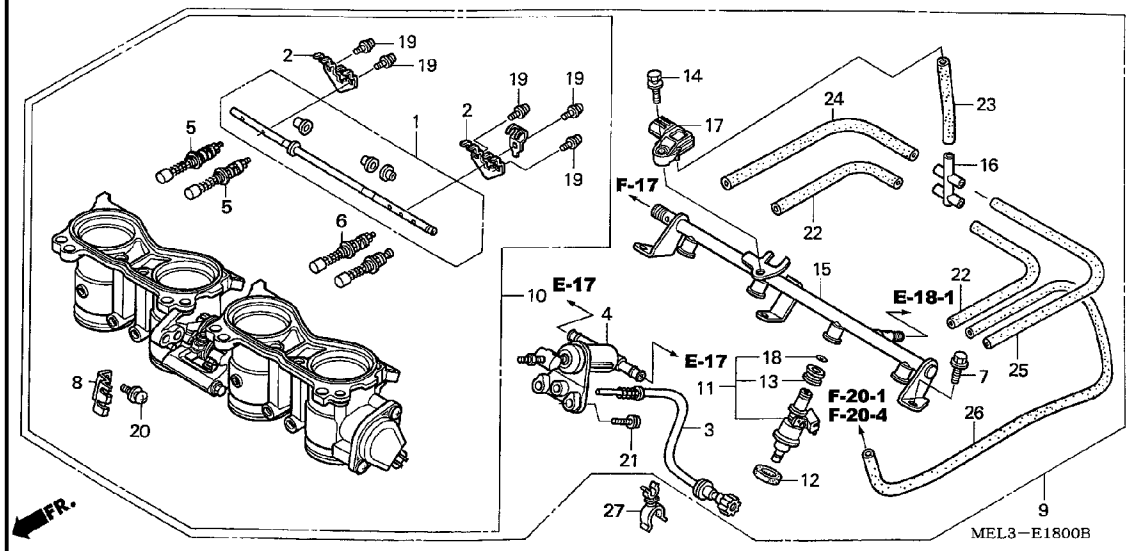


| Ref. No. | Part No. | Description | Reqd. QTY CBR1000RR 4 | 5 | 6 | 7 | Serial No. | Parts catalogue code |
|---|---|---|---|---|---|---|---|---|
| 16 | 17201-MCJ-003 | JOINT, FIVE WAY | 1 | 1 | 1 | 1 | | |
| 17 | 37830-MEL-003 | SENSOR ASSY., MAP | 1 | 1 | 1 | 1 | | |
| 18 | 91301-P7A-004 | O-RING | 4 | 4 | 4 | 4 | | |
| 19 | 93892-03008-10 | SCREW-WASHER, 3X8 | 5 | 5 | 5 | 5 | | |
| 20 | 93892-05012-10 | SCREW-WASHER, 5X12 | 2 | 2 | 2 | 2 | | |
| 21 | 93892-06020-10 | SCREW-WASHER, 6X20 | 2 | 2 | 2 | 2 | | |
| 22 | 95005-35050-20 | TUBE, 3.5X50(95005-35001-20M) | 2 | 2 | 2 | 2 | | |
| 23 | 95005-35060-20 | TUBE, 3.5X60(95005-35001-20M) | 1 | 1 | 1 | 1 | | |
| 24 | 95005-35130-20 | TUBE, 3.5X130(95005-35001-20M) | 1 | 1 | 1 | 1 | | |
| 25 | 95005-35150-20 | TUBE, 3.5X150(95005-35001-20M) | 1 | 1 | 1 | 1 | | |
| 26 | 95005-35540-20 | TUBE, 3.5X540(95005-35001-20M) | 1 | 1 | - | - | | |
| | 95005-35490-20 | TUBE, 3.5X490(95005-35001-20M) | - | - | 1 | 1 | | |
| 27 | 16965-MEL-D21 | CLAMP, HOSE | - | - | 1 | 1 | | |

# INJECTOR



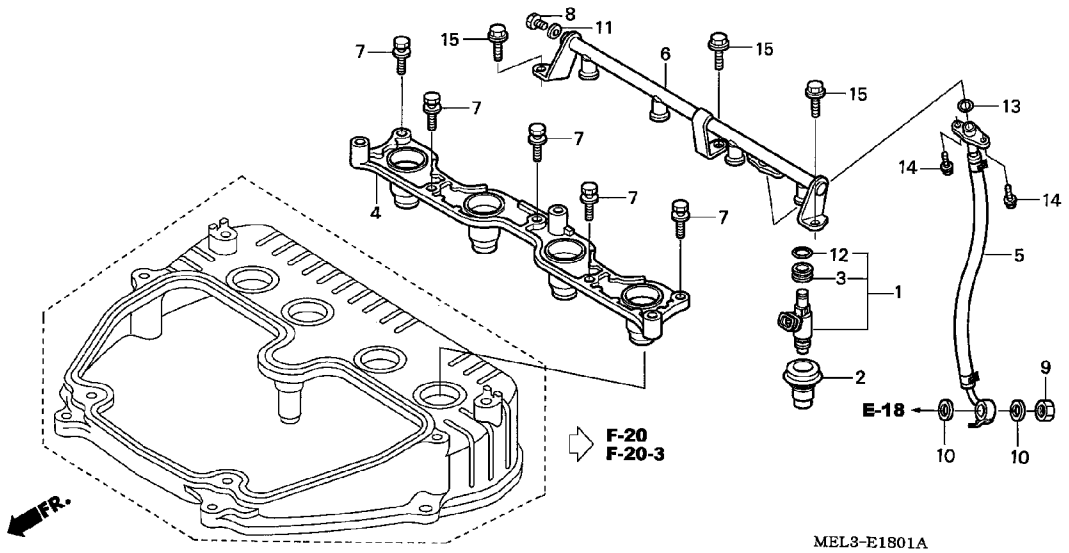


| Ref. No. | L.O.N. | (Relative ref. Number) Description | F.R.T. |
|---|---|---|---|
| 1 | 3111E0 | INJECTOR, FUEL :SECONDARY ···· | 0.5 |
| | | .NOTE: Same time for two units or more | |
| 4 | 3111E2 | BODY, INJECTOR ····· | 0.5 |
| 5 | | (10,13) | |
| | 3101C3 | HOSE, FUEL FEED :SECONDARY ··· | 0.5 |
| 6 | | (2) | |
| | 3111D8 | PIPE, FUEL :UPPER ····· | 0.5 |
| | 3111C8 | PIPE, FUEL :BOTH ····· | 1.0 |

| Ref. No. | Part No. | Description | Reqd. QTY CBR1000RR 4 | 5 | 6 | 7 | Serial No. | Parts catalogue code |
|---|---|---|---|---|---|---|---|---|
| 1 | 16450-MEL-003 | INJECTOR ASSY., FUEL ····· | 4 | 4 | - | - | | |
| | 16460-MEL-D21 | ····· | - | - | 4 | 4 | | |
| 2 | 16472-MEL-000 | SEAL RING, INJECTOR ····· | 4 | 4 | 4 | 4 | | |
| 3 | 16473-P7A-004 | CUSHION RING, INJECTOR ····· | 4 | 4 | 4 | 4 | | |
| 4 | 16510-MEL-000 | BODY, INJECTOR ····· | 1 | 1 | 1 | 1 | | |
| 5 | 16527-MEL-004 | HOSE COMP. B, FUEL FEED ····· | 1 | 1 | 1 | 1 | | |
| 6 | 16620-MEL-000 | PIPE COMP., FUEL FEED ····· | 1 | 1 | 1 | 1 | | |
| 7 | 90003-MEL-000 | BOLT, FLANGE, 5X14 ····· | 5 | 5 | 5 | 5 | | |
| 8 | 90009-PP4-E01 | BOLT, SEALING, 6MM ····· | 1 | 1 | 1 | 1 | | |
| 9 | 90201-PD1-000 | NUT A, SEALING, 12MM ····· | 1 | 1 | 1 | 1 | | |
| 10 | 90428-PD6-003 | WASHER, SEALING, 12MM ····· | 2 | 2 | 2 | 2 | | |
| 11 | 90430-PD6-003 | WASHER, SEALING, 6MM ····· | 1 | 1 | 1 | 1 | | |
| 12 | 91301-P7A-004 | O-RING ····· | 4 | 4 | 4 | 4 | | |
| 13 | 91302-MCA-000 | O-RING, 7.8X1.9 ····· | 1 | 1 | 1 | 1 | | |
| 14 | 96001-06008-00 | BOLT, FLANGE, 6X8 ····· | 2 | 2 | 2 | 2 | | |
| 15 | 96001-06012-00 | BOLT, FLANGE, 6X12 ····· | 3 | 3 | 3 | 3 | | |

# GASKET KIT A



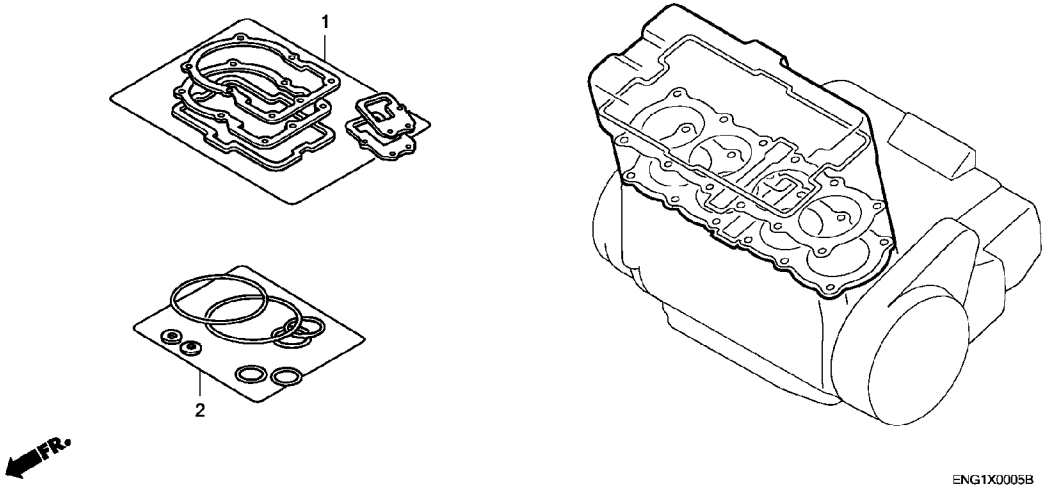


| Ref. No. | L.O.N. | (Relative ref. Number) Description | F.R.T. |
|---|---|---|---|
| | | NO INFORMATION ..... | |

| Ref. No. | Part No. | Description | Reqd. QTY CBR1000RR 4 | 5 | 6 | 7 | Serial No. | Parts catalogue code |
|---|---|---|---|---|---|---|---|---|
| 1 | 06113-MEL-000 | GASKET SHEET KIT A ..... | 1 | 1 | - | - | | |
| | 06113-MEL-A20 | ..... | | | | | | |
| | | (COMPONENT PARTS) | - | - | 1 | 1 | | |
| | 12251-MEL-013 | GASKET, CYLINDER HEAD ..... | 1 | 1 | - | - | | |
| | 12251-MEL-D21 | ..... | - | - | 1 | 1 | | |
| | 12391-MCJ-000 | GASKET, HEAD COVER ..... | 1 | 1 | 1 | 1 | | |
| | 12395-MCJ-000 | GASKET, PLUG HOLE ..... | 4 | 4 | 4 | 4 | | |
| | 14523-MCW-003 | GASKET, TENSIONER HOLE ..... | 1 | 1 | - | - | | |
| | 14525-MFA-D01 | ..... | - | - | 1 | 1 | | |
| | 18291-MEL-000 | GASKET, EX. PIPE ..... | 4 | 4 | - | - | | |
| | 18291-MEL-D20 | ..... | - | - | 4 | 4 | | |
| 2 | 06114-MEL-000 | WASHER O-RING KIT A ..... | | | | | | |
| | | (COMPONENT PARTS) | 1 | 1 | 1 | 1 | | |
| | 90442-397-000 | WASHER, SEALING, 6MM ..... | 1 | 1 | 1 | 1 | | |
| | 90463-ML7-000 | WASHER, SEALING, 6.5MM ..... | 10 | 10 | 10 | 10 | | |
| | 91301-MEL-003 | O-RING, 44.3X2.5 ..... | 4 | 4 | 4 | 4 | | |

# GASKET KIT B

H 5

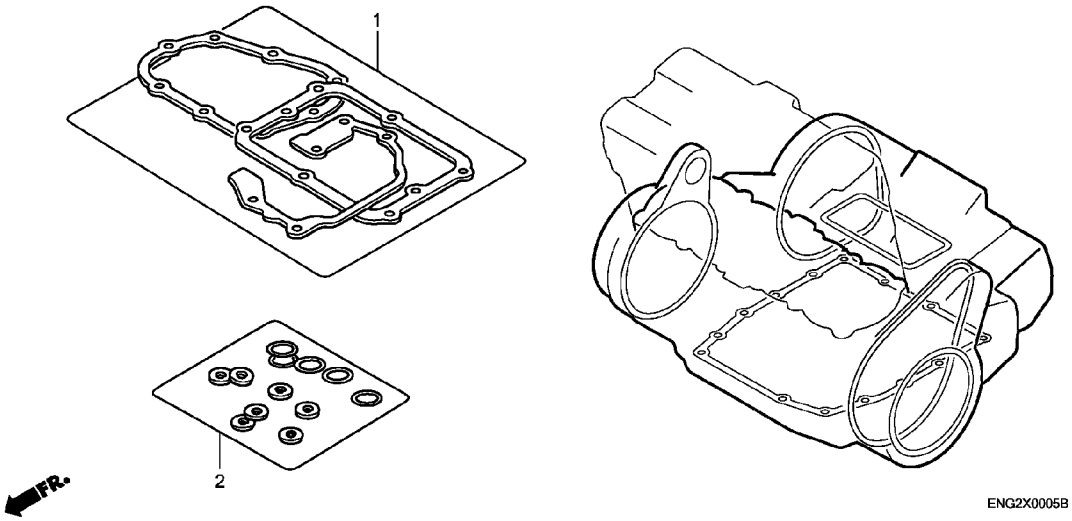


| Ref. No. | L.O.N. | (Relative ref. Number) Description | F.R.T. |
|---|---|---|---|
| | | NO INFORMATION ····· | |

| Ref. No. | Part No. | Description | Reqd. QTY CBR1000RR 4 | 5 | 6 | 7 | Serial No. | Parts catalogue code |
|---|---|---|---|---|---|---|---|---|
| 1 | 06115-MEL-000 | GASKET SHEET KIT B ····· | | | | | | |
| | | (COMPONENT PARTS) | 1 | 1 | 1 | 1 | | |
| | 11343-MEL-000 | GASKET, L. RR. COVER ····· | 1 | 1 | 1 | 1 | | |
| | 11372-MEL-000 | GASKET, CHANGE COVER ····· | 1 | 1 | 1 | 1 | | |
| | 15154-MAT-000 | PACKING, OIL STRAINER ····· | 1 | 1 | 1 | 1 | | |
| | 19226-MEL-300 | GASKET, WATER PUMP ····· | 2 | 2 | 2 | 2 | | |
| | 19312-MBW-000 | GASKET, THERMOSTAT CASE ····· | 1 | 1 | 1 | 1 | | |
| | 22862-MW7-650 | GASKET, SLAVE CYLINDER ····· | 1 | 1 | 1 | 1 | | |
| 2 | 06116-MEL-000 | WASHER O-RING KIT B ····· | 1 | - | - | - | | |
| | 06116-MEL-010 | ····· | | | | | | |
| | | (COMPONENT PARTS) | - | 1 | 1 | 1 | | |
| | 90443-MJ6-000 | WASHER, NEUTRAL ····· | 1 | 1 | 1 | 1 | | |
| | 90463-MEE-000 | WASHER, SEALING, 6MM ····· | 1 | - | - | - | | |
| | 90463-ML7-000 | WASHER, SEALING, 6.5MM ····· | 1 | 2 | 2 | 2 | | |
| | 91301-MEE-003 | O-RING, 32X1.7 ····· | 1 | 1 | 1 | 1 | | |
| | 91301-ML7-003 | O-RING, 48.1X3.6(ARAI) ····· | 1 | 1 | 1 | 1 | | |
| | 91302-MB0-013 | O-RING, 32.95X2.62(ARAI) ···· | 1 | 1 | 1 | 1 | | |
| | 91302-MEL-003 | O-RING, 24.5X2 ····· | 1 | 1 | 1 | 1 | | |
| | 91302-ZE9-000 | O-RING, 11.8X2.4 ····· | 1 | 1 | 1 | 1 | | |
| | 91302-377-000 | O-RING, 15X2.5 ····· | 1 | 1 | 1 | 1 | | |
| | 91303-377-000 | O-RING, 13.8X2.5 ····· | 2 | 2 | 2 | 2 | | |
| | 91306-MEL-003 | O-RING, 21.9X1.8 ····· | 1 | 1 | 1 | 1 | | |
| | 91307-KF0-003 | O-RING, 18X3(ARAI) ····· | 1 | 1 | 1 | 1 | | |
| | 91309-425-003 | O-RING, 24.4X3.1(ARAI) ····· | 1 | 1 | 1 | 1 | | |
| | 91313-MB0-003 | O-RING, 14.7X2.2(ARAI) ····· | 2 | 2 | 2 | 2 | | |
| | 91354-MCT-003 | O-RING, OIL COOLER ····· | 1 | 1 | 1 | 1 | | |
| | 94109-12000 | WASHER, DRAIN PLUG, 12MM ···· | 1 | 1 | 1 | 1 | | |

# HEADLIGHT



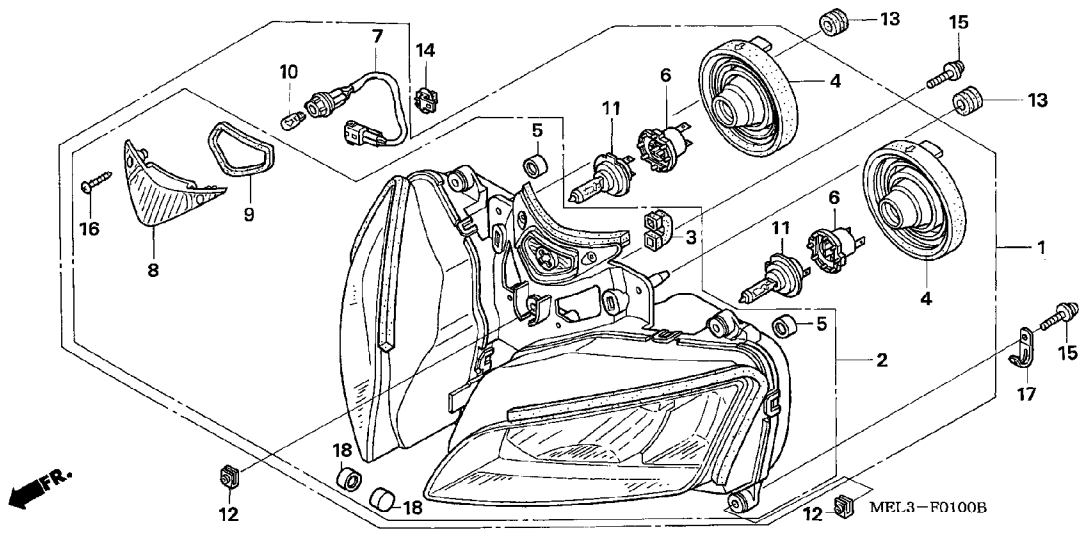


| Ref. No. | L.O.N. | (Relative ref. Number) Description | F.R.T. |
|---|---|---|---|
| 1 | 616115 | HEADLIGHT ASSEMBLY ---------- | 0.7 |
| | 616115D | .'06 model add ---------- | 0.2 |
| | 616115E | .'07 model add ---------- | 0.2 |
| 2 | 6161A7 | HEADLIGHT UNIT ---------- | 0.7 |
| | 6161A7A | .'06 model add ---------- | 0.2 |
| | 6161A7B | .'07 model add ---------- | 0.2 |
| 7 | 616180 | SOCKET, POSITION LIGHT ------- | 0.6 |
| | 616180A | .'06 model add ---------- | 0.2 |
| | 616180B | .'07 model add ---------- | 0.2 |
| 10 | | (8,9) | |
| | 616182 | BULB, POSITION LIGHT --------- | 0.1 |
| 11 | | (4,6) | |
| | 6161F7 | BULB, HEADLIGHT :LEFT -------- | 0.1 |
| | 6161F8 | BULB, HEADLIGHT :RIGHT ------- | 0.1 |
| | 6161H4 | BULB, HEADLIGHT :BOTH -------- | 0.1 |

| Ref. No. | Part No. | Description | Reqd. QTY CBR1000RR 4 | 5 | 6 | 7 | Serial No. | | Parts catalogue code |
|---|---|---|---|---|---|---|---|---|---|
| 1 | 33100-MEL-601 | HEADLIGHT ASSY. (12V 55W) --- | 1 | 1 | - | - | -------- | -------- | E,EK,3E,4EK |
| | 33100-MEL-641 | ---------- | 1 | 1 | - | - | -------- | -------- | BR,ED,F,G,KO,MX,2ED,2F,2G |
| | 33100-MEL-671 | ---------- | 1 | 1 | - | - | -------- | -------- | U,2U |
| | 33100-MEL-642 | ---------- | - | 1 | - | - | -------- | -------- | 2KO |
| | 33100-MEL-A21 | ---------- | - | - | 1 | 1 | -------- | -------- | U |
| | 33100-MEL-D21 | ---------- | - | - | 1 | 1 | -------- | -------- | BR,ED,F,KO,MX,2ED,2F |
| | 33100-MEL-E21 | ---------- | - | - | 1 | 1 | -------- | -------- | E,EK,3E,4EK |
| 2 | 33102-MEL-600 | HEADLIGHT UNIT COMP. -------- | 1 | 1 | - | - | -------- | -------- | E,EK,3E,4EK |
| | 33102-MEL-640 | ---------- | 1 | 1 | - | - | -------- | -------- | BR,ED,F,G,KO,MX,2ED,2F,2G |
| | 33102-MEL-670 | ---------- | 1 | 1 | - | - | -------- | -------- | U,2U |
| | 33102-MEL-641 | ---------- | - | 1 | - | - | -------- | -------- | 2KO |
| | 33102-MEL-A21 | ---------- | - | - | 1 | 1 | -------- | -------- | U |
| | 33102-MEL-D21 | ---------- | - | - | 1 | 1 | -------- | -------- | BR,ED,F,KO,MX,2ED,2F |
| | 33102-MEL-E21 | ---------- | - | - | 1 | 1 | -------- | -------- | E,EK,3E,4EK |
| 3 | 33103-MEL-000 | PIPE, CP ---------- | 1 | 1 | 1 | 1 | | | |
| 4 | 33112-KPB-003 | COVER, RUBBER ---------- | 2 | 2 | 2 | 2 | | | |
| 5 | 33113-MBW-D21 | PIPE, CP ---------- | 2 | - | - | - | | | |
| | | | - | 2 | - | - | -------- | -------- | BR,E,ED,EK,F,G,KO,MX,U,2ED,2F,2G,2U,3E,4EK |
| | 33113-MEE-D01 | ---------- | - | 2 | - | - | -------- | -------- | 2KO |
| | | | - | - | 2 | 2 | | | |
| 6 | 33130-MAT-611 | SOCKET COMP., HEADLIGHT ----- | 2 | 2 | 2 | 2 | | | |
| 7 | 33140-MEL-640 | SOCKET COMP. ---------- | 1 | 1 | 1 | 1 | | | |
| 8 | 33181-MEL-000 | LENS, POSITION LIGHT -------- | 1 | 1 | 1 | 1 | | | |
| 9 | 33184-MEL-000 | GASKET, SEAL ---------- | 1 | 1 | 1 | 1 | | | |
| 10 | 33301-SA0-741 | BULB (12V 5W)(STANLEY) ------ | 1 | 1 | 1 | 1 | | | |
| 11 | 34901-MAT-611 | BULB, HEADLIGHT (12V 55W)(H7) | 2 | 2 | 2 | 2 | | | |
| 12 | 90312-MT3-000 | NUT, CLIP, 5MM ---------- | 5 | 5 | 5 | 5 | | | |

# HEADLIGHT



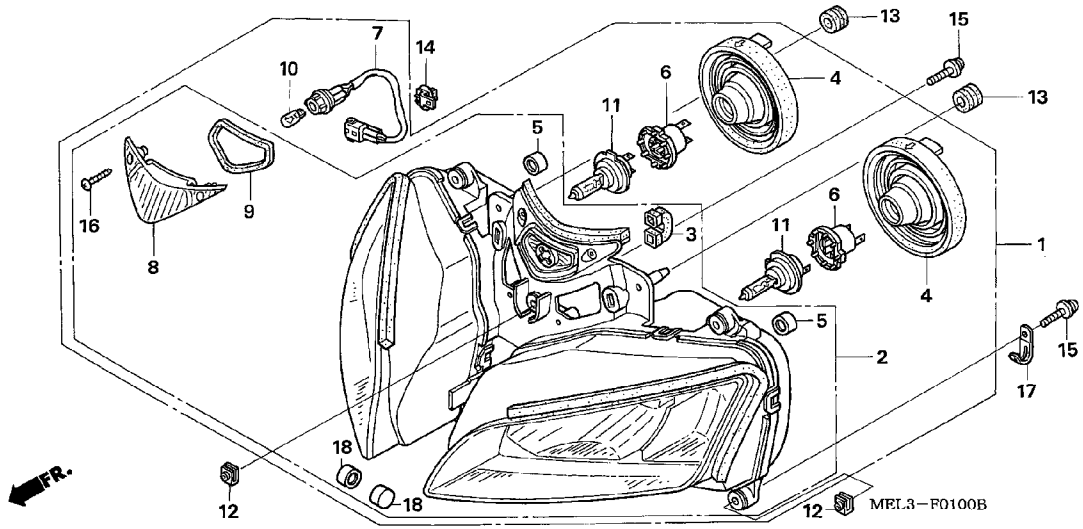


| Ref. No. | Part No. | Description | Reqd. QTY CBR1000RR 4 | 5 | 6 | 7 | Serial No. | Parts catalogue code |
|---|---|---|---|---|---|---|---|---|
| 13 | 90852-898-000 | RUBBER, CONTROL BOX ····· | 2 | 2 | 2 | 2 | | |
| 14 | 91565-SEL-003 | CLIP, COUPLER (BLACK) ····· | 1 | 1 | 1 | 1 | | |
| 15 | 93894-05022-07 | SCREW-WASHER, 5X22 ····· | 5 | 5 | 5 | 5 | | |
| 16 | 93901-344J0 | SCREW, TAPPING, 4X16 ····· | 2 | 2 | 2 | 2 | | |
| 17 | 32925-958-000 | CLIP, PULSER CORD ····· | - | 1 | - | - | | |
| 18 | 33113-MBW-D21 | PIPE, CP ····· | - | 2 | - | - | -------- -------- 2K0 | |
| | | | - | - | 2 | 2 | | |

# METER



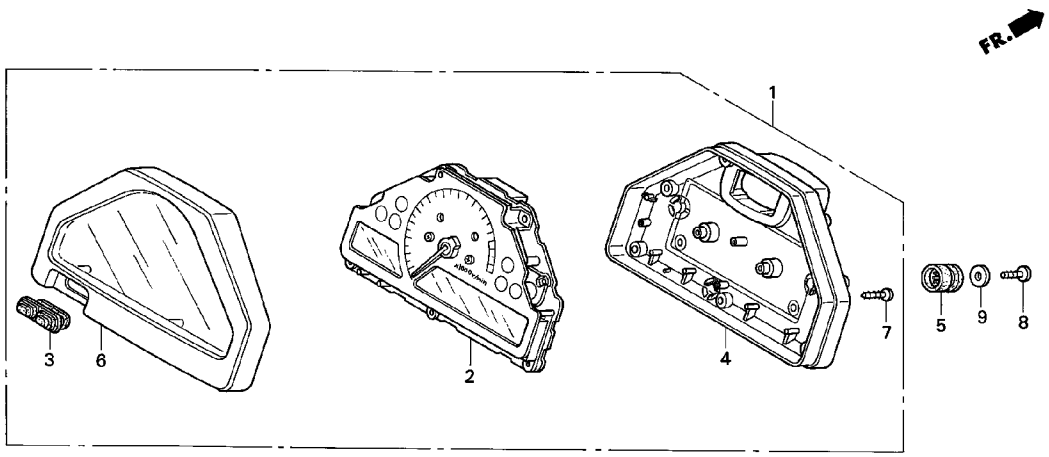


| Ref. No. | L.O.N. | (Relative ref. Number) Description | F.R.T. |
|---|---|---|---|
| 1 | 8121A1 | METER ASSY., COMBINATION ····· | 0.6 |
| | 8121A1A | .'06 model add ····· | 0.2 |
| | 8121A1B | .'07 model add ····· | 0.2 |
| 2 | 8121A2 | METER, COMBINATION ····· | 0.7 |
| | 8121A2A | .'06 model add ····· | 0.2 |
| | 8121A2B | .'07 model add ····· | 0.2 |
| 4 | 8121B5 | CASE, METER :LOWER ····· | 0.7 |
| | 8121B5A | .'06 model add ····· | 0.2 |
| | 8121B5B | .'07 model add ····· | 0.2 |
| 6 | | (3) | |
| | 8121B4 | CASE, METER :UPPER ····· | 0.7 |
| | 8121B4A | .'06 model add ····· | 0.2 |
| | 8121B4B | .'07 model add ····· | 0.2 |

3

| Ref. No. | Part No. | Description | Reqd. QTY CBR1000RR 4 | 5 | 6 | 7 | Serial No. | | Parts catalogue code |
|---|---|---|---|---|---|---|---|---|---|
| 1 | 37100-MEL-601 | METER ASSY., COMBINATION (MPH/KPH) | 1 | 1 | - | - | -------- | -------- | E,3E |
| | 37100-MEL-631 | METER ASSY., COMBINATION (KPH) | 1 | 1 | - | - | -------- | -------- | MX |
| | 37100-MEL-641 | ····· | 1 | - | - | - | -------- | -------- | BR,ED,F,G,KO,U |
| | 37100-MEL-D00 | ····· | - | 1 | - | - | -------- | -------- | BR,ED,EK,F,G,KO,U,2ED,2F,2G,2KO,2U,4EK |
| | 37100-MEL-D21 | ····· | - | - | 1 | 1 | -------- | -------- | BR,ED,EK,KO,U,2ED,4EK |
| | 37100-MEL-M21 | ····· | - | - | 1 | 1 | -------- | -------- | MX |
| | 37100-MEL-F21 | ····· | - | - | 1 | 1 | -------- | -------- | F,2F |
| | 37100-MEL-E22 | METER ASSY., COMBINATION (MPH/KPH) | - | - | 1 | 1 | -------- | -------- | E,3E |
| 2 | 37110-MEL-600 | METER ASSY., SPEED & TACHO & FUEL | 1 | 1 | - | - | -------- | -------- | E,3E |
| | 37110-MEL-630 | ····· | 1 | 1 | - | - | -------- | -------- | MX |
| | 37110-MEL-640 | ····· | 1 | - | - | - | -------- | -------- | BR,ED,F,G,KO,U |
| | 37110-MEL-D00 | ····· | - | 1 | - | - | -------- | -------- | BR,ED,EK,F,G,KO,U,2ED,2F,2G,2KO,2U,4EK |
| | 37110-MEL-D21 | ····· | - | - | 1 | 1 | -------- | -------- | BR,ED,EK,KO,U,2ED,4EK |
| | 37110-MEL-M21 | ····· | - | - | 1 | 1 | -------- | -------- | MX |
| | 37110-MEL-F21 | ····· | - | - | 1 | 1 | -------- | -------- | F,2F |
| | 37110-MEL-E22 | ····· | - | - | 1 | 1 | -------- | -------- | E,3E |
| 3 | 37111-MEL-600 | RUBBER, SWITCH ····· | 1 | 1 | 1 | 1 | -------- | -------- | E,MX,3E |
| | 37111-MEE-641 | ····· | - | 1 | 1 | 1 | -------- | -------- | BR,ED,EK,F,G,KO,U,2ED,2F,2G,2KO,2U,4EK |
| 4 | 37130-MEL-600 | CASE, UNDER ····· | 1 | 1 | 1 | 1 | -------- | -------- | E,MX,3E |
| | 37130-MEL-640 | ····· | 1 | 1 | 1 | 1 | -------- | -------- | BR,ED,EK,F,G,KO,U,2ED,2F,2G,2KO,2U,4EK |
| 5 | 37244-MM4-000 | RUBBER, SPEEDOMETER MOUNTING | 3 | 3 | 3 | 3 | | | |
| 6 | 37610-MEL-600 | CASE ASSY., UPPER ····· | 1 | 1 | 1 | 1 | -------- | -------- | E,MX,3E |
| | 37610-MEL-640 | ····· | 1 | 1 | 1 | 1 | -------- | -------- | BR,ED,EK,F,G,KO,U,2ED,2F,2G,2KO,2U,4EK |
| 7 | 93901-24380 | SCREW, TAPPING, 4X12 ····· | 7 | 7 | 7 | 7 | -------- | -------- | E,MX,3E |
| | 93903-22480 | SCREW, TAPPING, 3X16 ····· | 9 | 9 | 9 | 9 | -------- | -------- | BR,ED,EK,F,G,KO,U,2ED,2F,2G,2KO,2U,4EK |

# METER



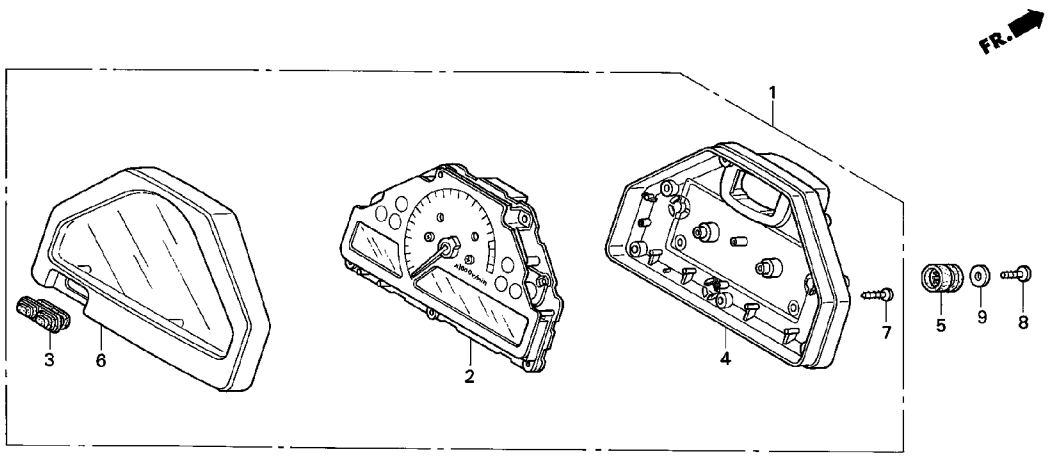


MEL3-F0200

| Ref. No. | Part No. | Description | Reqd. QTY CBR1000RR 4 | 5 | 6 | 7 | Serial No. | Parts catalogue code |
|---|---|---|---|---|---|---|---|---|
| 8 | 93913-25380 | SCREW, TAPPING, 5X14(PO) ···· | 3 | 3 | 3 | 3 | | |
| 9 | 94103-05700 | WASHER, PLAIN, 5MM ····· | 3 | 3 | 3 | 3 | | |

# SWITCH/CABLE



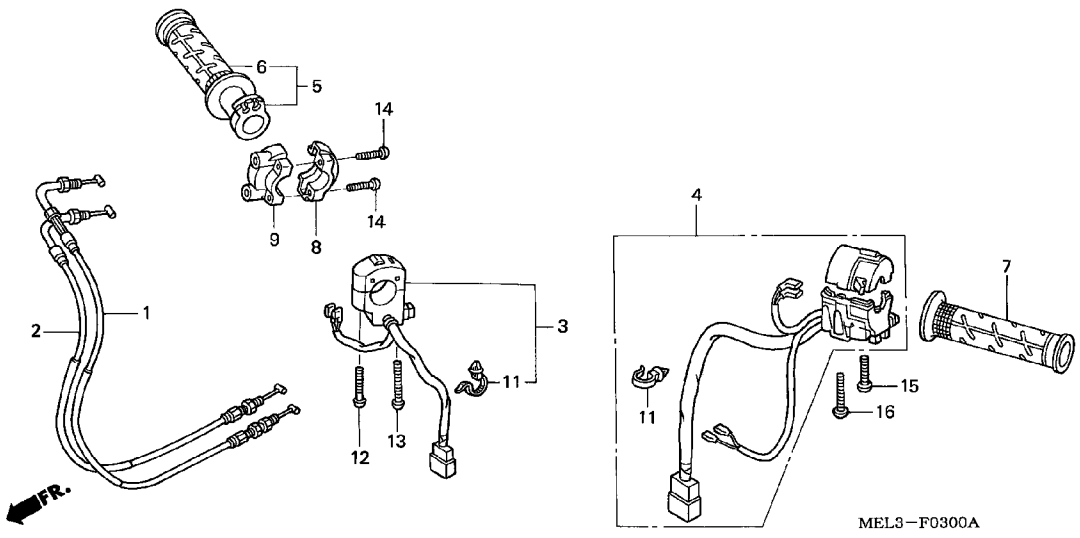


| Ref. No. | L.O.N. | (Relative ref. Number) Description | F.R.T. |
|---|---|---|---|
| 1 | | (2) | |
| | 811100 | CABLE, THROTTLE ····· | 0.9 |
| | | .NOTE: Same time for two units | |
| 3 | 615120 | SWITCH, STARTER KILL ····· | 0.7 |
| 4 | 615118 | SWITCH, WINKER ····· | 0.7 |
| 5 | 810150 | GRIP, THROTTLE ····· | 0.7 |
| 6 | 8101C1 | GRIP, HANDLE :RIGHT ····· | 0.2 |
| 7 | 8101C0 | GRIP, HANDLE :LEFT ····· | 0.1 |
| 9 | 810155 | HOUSING, THROTTLE ····· | 0.7 |

| Ref. No. | Part No. | Description | Reqd. QTY CBR1000RR 4 | 5 | 6 | 7 | Serial No. | Parts catalogue code |
|---|---|---|---|---|---|---|---|---|
| 1 | 17910-MEL-000 | CABLE COMP. A, THROTTLE ····· | 1 | 1 | 1 | 1 | | |
| 2 | 17920-MEL-000 | CABLE COMP. B, THROTTLE ····· | 1 | 1 | 1 | 1 | | |
| 3 | 35130-MEL-003 | SWITCH ASSY., STARTER KILL ·· | 1 | 1 | - | - | | |
| | 35130-MEL-J00 | ····· | - | - | 1 | 1 | | |
| 4 | 35200-MEL-640 | SWITCH ASSY., WINKER ····· | 1 | 1 | - | - | -------- -------- | BR,E,ED,EK,F,G,KO,U,2ED,2F,2G,2KO,2U,3E,4EK |
| | 35200-MEL-670 | ····· | 1 | 1 | 1 | 1 | -------- -------- | MX |
| | 35200-MEL-D21 | ····· | - | - | 1 | 1 | -------- -------- | BR,E,ED,EK,F,KO,U,2ED,2F,3E,4EK |
| 5 | 53140-MCF-000 | GRIP ASSY., THROTTLE ····· | 1 | 1 | 1 | 1 | | |
| 6 | 53165-MY9-890 | GRIP, R. HANDLE ····· | 1 | 1 | 1 | 1 | | |
| 7 | 53166-MY9-890 | GRIP, L. HANDLE ····· | 1 | 1 | 1 | 1 | | |
| 8 | 53167-MV4-000 | HOUSING, UPPER THROTTLE ····· | 1 | 1 | 1 | 1 | | |
| 9 | 53168-MV4-000 | HOUSING, UNDER THROTTLE ····· | 1 | 1 | 1 | 1 | | |
| 11 | 91540-SOA-003 | CLIP, HARNESS BAND (NATURAL) (96.9MM) | 2 | 2 | 2 | 2 | | |
| 12 | 93500-04032-0G | SCREW, PAN, 4X32 ····· | 1 | 1 | 1 | 1 | | |
| 13 | 93500-04045-0G | SCREW, PAN, 4X45 ····· | 1 | 1 | 1 | 1 | | |
| 14 | 93500-05022-0G | SCREW, PAN, 5X22 ····· | 2 | 2 | 2 | 2 | | |
| 15 | 93500-05030-0G | SCREW, PAN, 5X30 ····· | 1 | 1 | - | - | | |
| | 93500-05020-0G | SCREW, PAN, 5X20 ····· | - | - | 1 | 1 | -------- -------- | BR,E,ED,EK,F,KO,U,2ED,2F,3E,4EK |
| | 93500-05035-0G | SCREW, PAN, 5X35 ····· | - | - | 1 | 1 | -------- -------- | MX |
| 16 | 93500-05040-0G | SCREW, PAN, 5X40 ····· | 1 | 1 | - | - | | |
| | 93500-05020-0G | SCREW, PAN, 5X20 ····· | - | - | 1 | 1 | -------- -------- | BR,E,ED,EK,F,KO,U,2ED,2F,3E,4EK |
| | 93500-05045-0G | SCREW, PAN, 5X45 ····· | - | - | 1 | 1 | -------- -------- | MX |

# FR. BRAKE MASTER CYLINDER

I 6

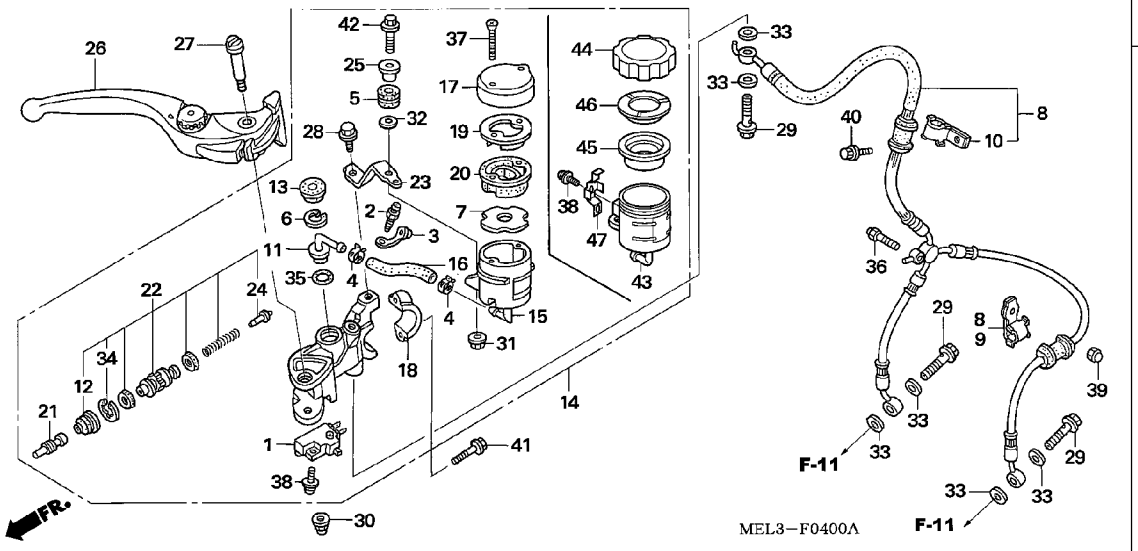


| Ref. No. | L.O.N. | (Relative ref. Number) Description | F.R.T. |
|---|---|---|---|
| 1 | 6151B2 | SWITCH, FRONT STOP ····· | 0.1 |
| 8 | 7121A0 | HOSE, FRONT BRAKE ····· | 0.5 |
| | | .INCLUDES: Bleed brakes | |
| 14 | 712105 | CYLINDER, FRONT BRAKE MASTER · | 0.4 |
| | | .INCLUDES: Bleed brakes | |
| 15 | | (43) | |
| | 7121H4 | CUP, FRONT MASTER CYLINDER OIL | 0.2 |
| 20 | | (45) | |
| | 7121G6 | DIAPHRAGM, FRONT BRAKE MASTER CYLINDER ····· | 0.1 |
| 22 | 7121G9 | PISTON SET, FRONT BRAKE MASTER | 0.4 |
| | | .INCLUDES: Bleed brakes | |
| 26 | 8101C7 | LEVER, HANDLE :RIGHT ····· | 0.1 |
| | 8101F5 | LEVER, HANDLE :BOTH ····· | 0.2 |

| Ref. No. | Part No. | Description | Reqd. QTY CBR1000RR 4 | 5 | 6 | 7 | Serial No. | Parts catalogue code |
|---|---|---|---|---|---|---|---|---|
| 1 | 35340-MEL-003 | SWITCH ASSY., FR. STOP ····· | 1 | 1 | 1 | 1 | | |
| 2 | 43352-568-003 | SCREW, BLEEDER (NISSIN) ····· | 1 | 1 | 1 | 1 | | |
| 3 | 43353-461-771 | CAP, BLEEDER ····· | 1 | 1 | 1 | 1 | | |
| 4 | 43514-KS6-701 | CLAMP, MASTER CYLINDER OIL HOSE | 2 | 2 | 2 | 2 | | |
| 5 | 43516-MCJ-006 | RUBBER, OIL CUP ····· | 1 | 1 | 1 | 1 | | |
| 6 | 43517-KS6-701 | CIRCLIP, RR. MASTER CYLINDER | 1 | 1 | 1 | 1 | | |
| 7 | 43523-MAH-671 | FLOAT, RR. MASTER CYLINDER ·· | 1 | 1 | - | - | | |
| 8 | 45125-MEL-003 | HOSE COMP., FR. BRAKE ····· | 1 | 1 | 1 | 1 | | |
| 9 | 45158-MEL-000 | CLAMPER A, FR. BRAKE HOSE ··· | 1 | 1 | 1 | 1 | | |
| 10 | 45159-MEL-000 | CLAMPER B, FR. BRAKE HOSE ··· | 1 | 1 | 1 | 1 | | |
| 11 | 45503-KV3-006 | CONNECTOR, MASTER CYLINDER ·· | 1 | 1 | 1 | 1 | | |
| 12 | 45504-MCF-006 | BOOT COMP. ····· | 1 | 1 | 1 | 1 | | |
| 13 | 45505-KV3-006 | COVER, DUST ····· | 1 | 1 | 1 | 1 | | |
| 14 | 45510-MEL-006 | CYLINDER SUB ASSY., FR. MASTER (NISSIN) | 1 | 1 | - | - | | |
| | 45510-MEL-D21 | ····· | - | - | 1 | 1 | | |
| 15 | 45511-KV3-016 | CUP COMP., OIL ····· | 1 | 1 | - | - | | |
| 16 | 45512-MEL-006 | HOSE, MASTER CYLINDER OIL ··· | 1 | 1 | 1 | 1 | | |
| 17 | 45513-KV3-006 | CAP, OIL CUP ····· | 1 | 1 | - | - | | |
| 18 | 45517-MEL-006 | HOLDER, MASTER CYLINDER ····· | 1 | 1 | 1 | 1 | | |
| 19 | 45518-KV3-006 | PLATE, DIAPHRAGM ····· | 1 | 1 | - | - | | |
| 20 | 45520-KV3-006 | DIAPHRAGM ····· | 1 | 1 | - | - | | |
| 21 | 45525-MEL-006 | ROD, PUSH ····· | 1 | 1 | 1 | 1 | | |
| 22 | 45530-MEL-006 | CYLINDER SET, MASTER ····· | 1 | 1 | 1 | 1 | | |

3

# FR. BRAKE MASTER CYLINDER



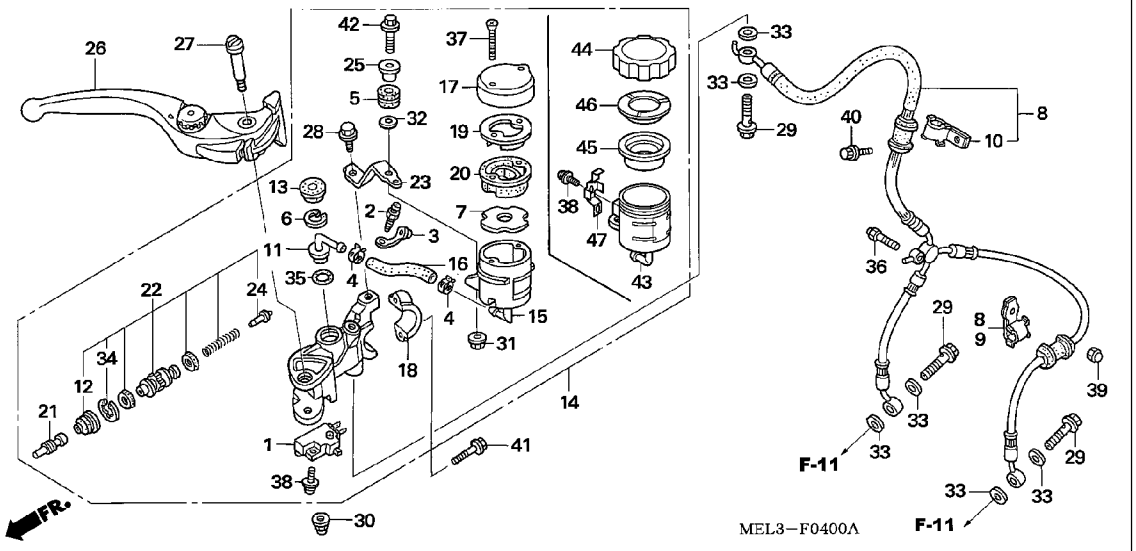


| Ref. No. | Part No. | Description | Reqd. QTY CBR1000RR 4 | 5 | 6 | 7 | Serial No. | Parts catalogue code |
|---|---|---|---|---|---|---|---|---|
| 23 | 45550-MEL-006 | STAY, FR. MASTER CYLINDER --- | 1 | 1 | 1 | 1 | | |
| 24 | 46140-MEL-006 | GUIDE, SPRING ····· | 1 | 1 | 1 | 1 | | |
| 25 | 50324-425-010 | COLLAR, 6.3X13 ····· | 1 | 1 | 1 | 1 | | |
| 26 | 53170-MEL-006 | LEVER ASSY., R. HANDLE ····· | 1 | 1 | 1 | 1 | | |
| 27 | 90114-MCF-006 | BOLT, HANDLE LEVER ····· | 1 | 1 | 1 | 1 | | |
| 28 | 90117-MR7-000 | BOLT, FLANGE, 6X12 ····· | 1 | 1 | 1 | 1 | | |
| 29 | 90145-MS9-612 | BOLT, OIL, 10X22 ····· | 3 | 3 | 3 | 3 | | |
| 30 | 90201-415-000 | NUT, CAP, 6MM ····· | 1 | 1 | 1 | 1 | | |
| 31 | 90301-MG3-000 | NUT, U, 6MM ····· | 1 | 1 | 1 | 1 | | |
| 32 | 90473-147-000 | WASHER, 6X16 ····· | 1 | 1 | 1 | 1 | | |
| 33 | 90545-300-000 | WASHER, OIL BOLT ····· | 6 | 6 | 6 | 6 | | |
| 34 | 90651-MCF-006 | CIRCLIP ····· | 1 | 1 | 1 | 1 | | |
| 35 | 91212-422-006 | O-RING, 14.8X2.4 ····· | 1 | 1 | 1 | 1 | | |
| 36 | 92501-06018-0G | BOLT, HEX. CAP, 6X18 ····· | 1 | 1 | - | - | | |
| | 96001-06012-07 | BOLT, FLANGE, 6X12 ····· | - | - | 1 | 1 | | |
| 37 | 93600-04050-1G | SCREW, FLAT, 4X50 ····· | 2 | 2 | - | - | | |
| 38 | 93893-04012-17 | SCREW-WASHER, 4X12 ····· | 1 | 1 | 2 | 2 | | |
| 39 | 94021-06070-0S | NUT, CAP, 6MM ····· | 1 | 1 | 1 | 1 | | |
| 40 | 96001-06016-07 | BOLT, FLANGE, 6X16 ····· | 1 | 1 | - | - | | |
| | 96001-06018-07 | BOLT, FLANGE, 6X18 ····· | - | - | 1 | 1 | | |
| 41 | 96001-06022-07 | BOLT, FLANGE, 6X22 ····· | 2 | 2 | 2 | 2 | | |
| 42 | 96300-06028-07 | BOLT, FLANGE, 6X28 ····· | 1 | 1 | 1 | 1 | | |
| 43 | 45511-MEL-D21 | CUP COMP., OIL ····· | - | - | 1 | 1 | | |
| 44 | 45513-MEL-D21 | CAP, OIL CUP ····· | - | - | 1 | 1 | | |
| 45 | 45520-300-000 | DIAPHRAGM ····· | - | - | 1 | 1 | | |

# FR. BRAKE MASTER CYLINDER



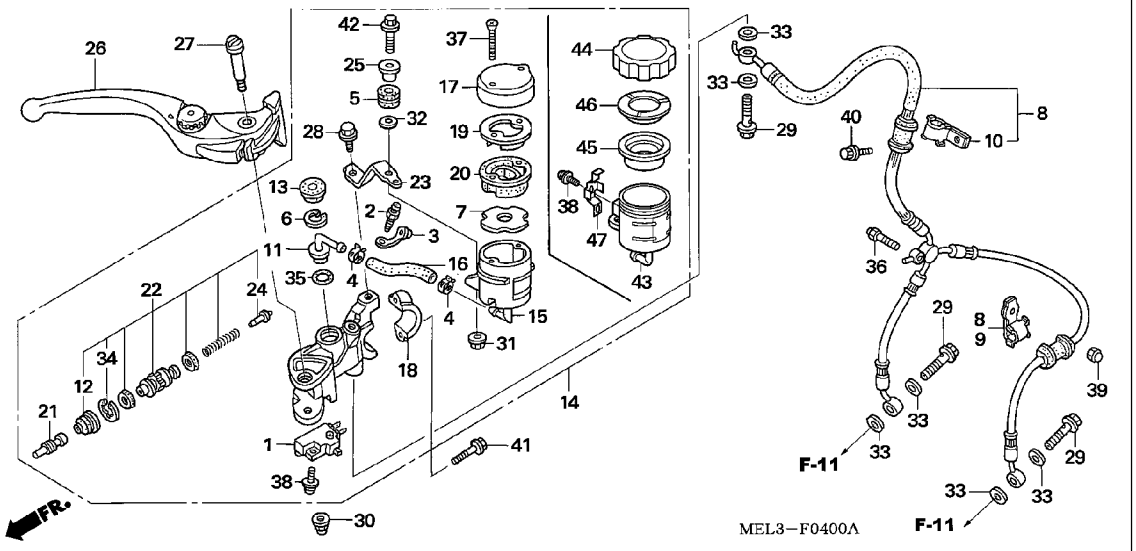


| Ref. No. | Part No. | Description | Reqd. QTY CBR1000RR 4 | 5 | 6 | 7 | Serial No. | Parts catalogue code |
|---|---|---|---|---|---|---|---|---|
| 46 | 45521-MJ6-006 | PLATE, DIAPHRAGM ---------- | - | - | 1 | 1 | | |
| 47 | 45535-MR8-901 | PLATE, STOP ---------- | - | - | 1 | 1 | | |

# CLUTCH MASTER CYLINDER



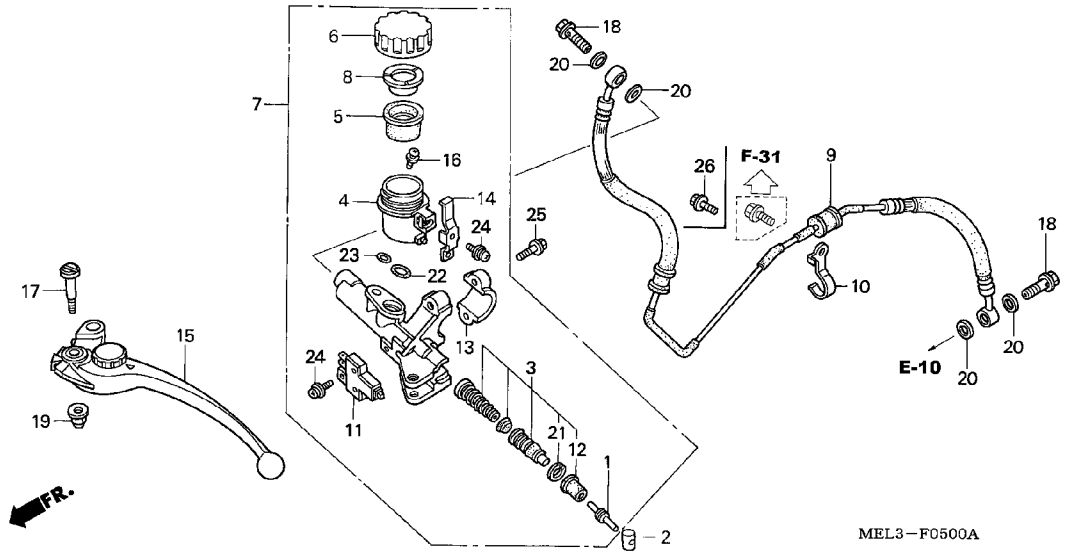


| Ref. No. | L.O.N. | (Relative ref. Number) Description | F.R.T. |
|---|---|---|---|
| 3 | 2121B3 | PISTON, CLUTCH MASTER CYLINDER .INCLUDES: Air bleeding | 0.4 |
| 4 | | (22,23) | |
| | 7121H5 | CUP, CLUTCH MASTER CYLINDER OIL ····· | 0.3 |
| 5 | 7121G8 | DIAPHRAGM, CLUTCH MASTER CYLINDER ····· | 0.1 |
| 7 | 712150 | CYLINDER, CLUTCH MASTER ····· .INCLUDES: Air bleeding | 0.4 |
| 9 | 712152 | PIPE, CLUTCH ····· .INCLUDES: Air bleeding | 1.5 |
| | 712152A | .'06 model add ····· | 0.2 |
| | 712152B | .'07 model add ····· | 0.2 |
| 11 | 6151A9 | SWITCH, CLUTCH ····· | 0.1 |
| 15 | 8101C6 | LEVER, HANDLE :LEFT ····· | 0.1 |
| | 8101F5 | LEVER, HANDLE :BOTH ····· | 0.2 |

| Ref. No. | Part No. | Description | Reqd. QTY CBR1000RR 4 | 5 | 6 | 7 | Serial No. | Parts catalogue code |
|---|---|---|---|---|---|---|---|---|
| 1 | 22884-MAT-E01 | ROD, PUSH ····· | 1 | 1 | 1 | 1 | | |
| 2 | 22885-MB0-006 | BUSH ····· | 1 | 1 | 1 | 1 | | |
| 3 | 22886-MAT-E01 | PISTON SET, MASTER CYLINDER · | 1 | 1 | 1 | 1 | | |
| 4 | 22887-MBB-006 | CUP COMP., OIL ····· | 1 | 1 | 1 | 1 | | |
| 5 | 22888-MR7-006 | DIAPHRAGM ····· | 1 | 1 | 1 | 1 | | |
| 6 | 22889-MR7-006 | CAP, CLUTCH OIL CUP ····· | 1 | 1 | 1 | 1 | | |
| 7 | 22890-MEL-006 | CYLINDER SUB ASSY., CLUTCH MASTER | 1 | - | - | - | | |
| | | | - | 1 | - | - | -------- -------- | BR,E,ED,EK,F,G,K0,MX,U,2ED,2F,2G,3E,4EK |
| | 22890-MEL-016 | ····· | - | 1 | - | - | -------- -------- | 2K0,2U |
| | | | - | - | 1 | 1 | | |
| 8 | 22890-MR7-006 | PLATE, DIAPHRAGM ····· | 1 | 1 | 1 | 1 | | |
| 9 | 22900-MEL-000 | PIPE COMP., CLUTCH ····· | 1 | 1 | 1 | 1 | | |
| 10 | 22912-MEL-000 | CLAMP, CLUTCH PIPE RR. ····· | 1 | 1 | 1 | - | | |
| | 22912-MEL-D30 | ····· | - | - | - | 1 | | |
| 11 | 35330-MB0-003 | SWITCH ASSY., CLUTCH ····· | 1 | 1 | 1 | 1 | | |
| 12 | 45504-MAT-E01 | BOOT COMP. ····· | 1 | 1 | 1 | 1 | | |
| 13 | 45517-MEL-006 | HOLDER, MASTER CYLINDER ····· | 1 | 1 | 1 | 1 | | |
| 14 | 45535-MR8-901 | PLATE, STOP ····· | 1 | 1 | 1 | 1 | | |
| 15 | 53180-MEJ-006 | LEVER ASSY., L. HANDLE ····· | 1 | 1 | 1 | 1 | | |
| 16 | 90101-MR7-006 | SCREW, TRIPLE, 4X11 ····· | 1 | 1 | 1 | 1 | | |
| 17 | 90114-MA5-671 | BOLT, HANDLE LEVER PIVOT ···· | 1 | 1 | 1 | 1 | | |
| 18 | 90145-MS9-612 | BOLT, OIL, 10X22 ····· | 2 | 2 | 2 | 2 | | |
| 19 | 90201-415-000 | NUT, CAP, 6MM ····· | 1 | 1 | 1 | 1 | | |
| 20 | 90545-300-000 | WASHER, OIL BOLT ····· | 4 | 4 | 4 | 4 | | |

# CLUTCH MASTER CYLINDER



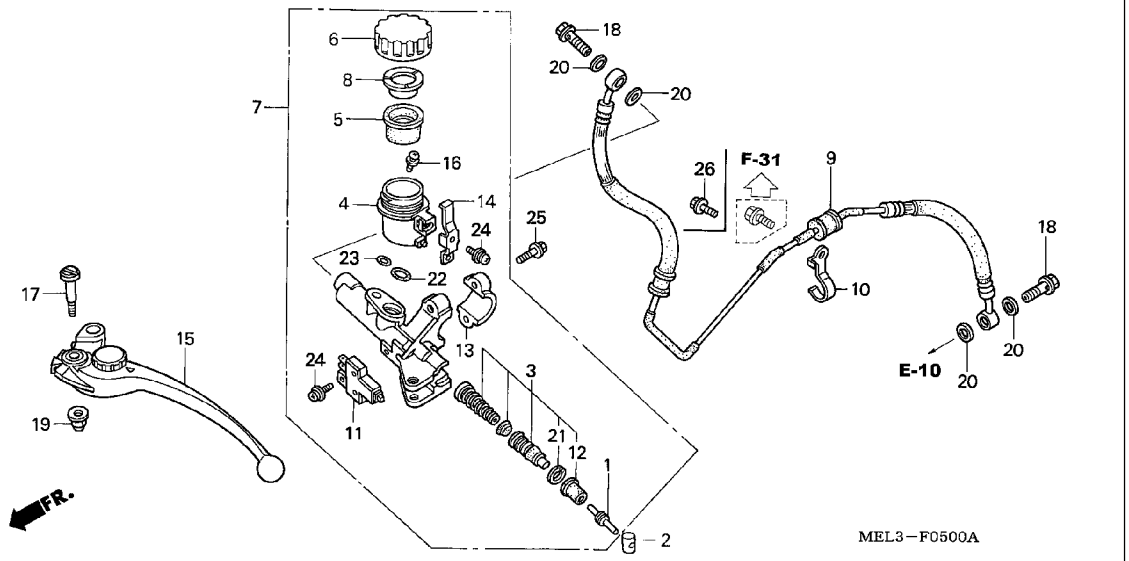


| Ref. No. | Part No. | Description | Reqd. QTY CBR1000RR 4 | 5 | 6 | 7 | Serial No. | Parts catalogue code |
|---|---|---|---|---|---|---|---|---|
| 21 | 90651-MA5-671 | CIRCLIP | 1 | 1 | 1 | 1 | | |
| 22 | 91212-422-006 | O-RING, 14.8X2.4 | 1 | 1 | 1 | 1 | | |
| 23 | 91355-MG9-006 | O-RING | 1 | 1 | 1 | 1 | | |
| 24 | 93893-04012-17 | SCREW-WASHER, 4X12 | 2 | 2 | 2 | 2 | | |
| 25 | 96001-06022-07 | BOLT, FLANGE, 6X22 | 2 | 2 | 2 | 2 | | |
| 26 | 96001-06010-07 | BOLT, FLANGE, 6X10 | - | - | 1 | 1 | | |

# HANDLE PIPE/TOP BRIDGE



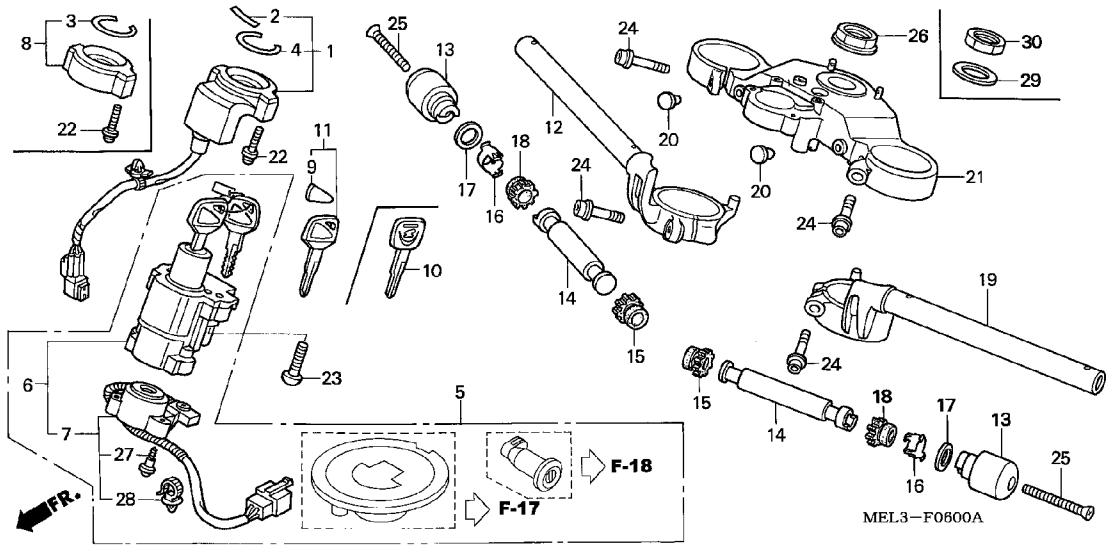


| Ref. No. | L.O.N. | (Relative ref. Number) Description | F.R.T. |
|---|---|---|---|
| 1 | 6141A2 | RECEIVER UNIT, IMMOBILIZER --- | 0.8 |
| 5 | 6151A1 | KEY SET ---------- | 1.3 |
| | 6151A1A | .HISS type add ---------- | 0.4 |
| | 6151D2 | KEY SET(A) ---------- | 1.4 |
| | | .NOTE: After '05 model | |
| | 6151D2A | .HISS type add ---------- | 0.5 |
| 6 | 615145 | SWITCH, COMBINATION & LOCK --- | 1.1 |
| | 615145A | .HISS type add ---------- | 0.4 |
| | 6151E9 | SWITCH, COMBINATION & LOCK(A) | 1.1 |
| | | .NOTE: After '05 model | |
| | 6151E9A | .HISS type add ---------- | 0.5 |
| 7 | 6151C2 | BASE, CONTACT ---------- | 1.0 |
| 8 | 8121B8 | COVER, COMBINATION SWITCH ---- | 0.1 |
| 11 | 6151D9 | KEY, BLANK ---------- | 0.4 |
| | | .NOTE: HISS type | |
| | | .EXCLUDES: Key cutting | |
| | 6151D9A | .'06 model add ---------- | 0.1 |
| | 6151D9B | .'07 model add ---------- | 0.1 |
| 12 | 8101B1 | PIPE, STEERING HANDLE :RIGHT - | 0.6 |
| | 8101B2 | PIPE, STEERING HANDLE :BOTH -- | 0.9 |
| 14 | 8101D6 | WEIGHT B, HANDLE :LEFT ------- | 0.2 |
| | 8101D7 | WEIGHT B, HANDLE :RIGHT ------ | 0.2 |
| | 8101D8 | WEIGHT B, HANDLE :BOTH ------- | 0.4 |
| 19 | 8101B0 | PIPE, STEERING HANDLE :LEFT -- | 0.7 |
| | 8101B2 | PIPE, STEERING HANDLE :BOTH -- | 0.9 |

| Ref. No. | Part No. | Description | Reqd. QTY CBR1000RR 4 | 5 | 6 | 7 | Serial No. | | Parts catalogue code |
|---|---|---|---|---|---|---|---|---|---|
| 1 | 30430-MEL-305 | RECEIVER UNIT SET ---------- | 1 | - | - | - | -------- | -------- | E,ED,F,G |
| | | | - | 1 | - | - | -------- | 5M100220 | F,2F |
| | | | - | 1 | - | - | -------- | 5M100560 | G,2G |
| | | | - | 1 | - | - | -------- | 5M103173 | E,ED,EK,2ED,3E,4EK |
| | 30430-MEL-640 | RECEIVER UNIT ---------- | 1 | 1 | - | - | -------- | -------- | BR,KO |
| | | | 1 | - | - | - | -------- | -------- | U |
| | | | - | 1 | - | - | -------- | 5M100461 | U,2U |
| | 30430-MEL-315 | RECEIVER UNIT SET ---------- | - | 1 | - | - | 5M100221 | -------- | F,2F |
| | | | - | 1 | - | - | 5M100561 | -------- | G,2G |
| | | | - | 1 | - | - | 5M103174 | -------- | E,ED,EK,2ED,3E,4EK |
| | 30430-MEL-641 | RECEIVER UNIT ---------- | - | 1 | - | - | -------- | -------- | 2KO |
| | | | - | 1 | - | - | 5M100462 | -------- | U,2U |
| | | | - | - | 1 | - | -------- | 6M200041 | KO |
| | | | - | - | 1 | - | -------- | 6M200383 | BR |
| | | | - | - | 1 | - | -------- | 6M200450 | U |
| | 30430-MEL-325 | RECEIVER UNIT SET ---------- | - | - | 1 | - | -------- | -------- | E,ED,EK,F |
| | 30430-MEL-642 | RECEIVER UNIT ---------- | - | - | 1 | - | 6M200042 | -------- | KO |
| | | | - | - | 1 | - | 6M200384 | -------- | BR |
| | | | - | - | 1 | - | 6M200451 | -------- | U |
| | | | - | - | - | 1 | -------- | -------- | BR,KO,U |
| | 30430-MEL-335 | RECEIVER UNIT SET ---------- | - | - | - | 1 | -------- | -------- | E,ED,EK,F,2ED,2F,3E,4EK |
| 2 | 30432-MBW-E00 | MARK, RECEIVER ---------- | 1 | 1 | 1 | 1 | -------- | -------- | BR,E,ED,EK,F,G,KO,U,2ED,2F,2G,2KO,2U,3E,4EK |
| 3 | 30433-MBW-600 | SEAL, IGNITION SWITCH ------- | 1 | 1 | 1 | 1 | -------- | -------- | MX |
| 4 | 30433-MBW-601 | SEAL, IGNITION SWITCH ------- | 1 | 1 | 1 | 1 | -------- | -------- | BR,E,ED,EK,F,G,KO,U,2ED,2F,2G,2KO,2U,3E,4EK |
| 5 | 35010-MEL-640 | KEY SET ---------- | 1 | 1 | - | - | -------- | -------- | BR,E,ED,EK,F,G,KO,U,2ED,2F,2G,2KO,2U,3E,4EK |
| | 35010-MEL-670 | ---------- | 1 | 1 | - | - | -------- | -------- | MX |
| | 35010-MEL-A20 | ---------- | - | - | 1 | 1 | -------- | -------- | MX |
| | 35010-MEL-D20 | ---------- | - | - | 1 | 1 | -------- | -------- | BR,E,ED,EK,F,KO,U,2ED,2F,3E,4EK |

# HANDLE PIPE/TOP BRIDGE



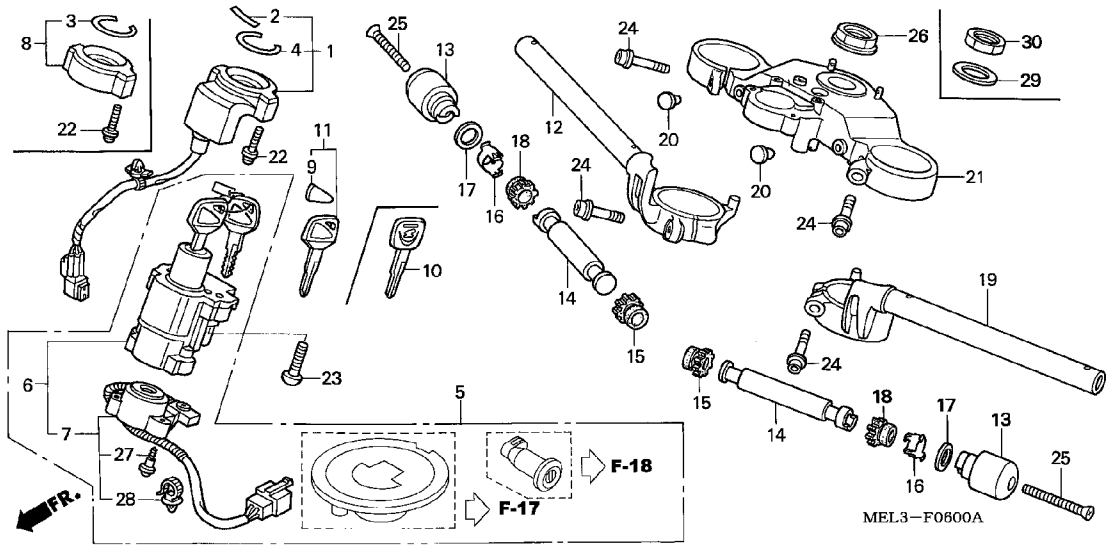


| Ref. No. | L.O.N. | (Relative ref. Number) Description | F.R.T. |
|---|---|---|---|
| 21 | 510110 | BRIDGE, FORK TOP ---------- | 1.0 |

| Ref. No. | Part No. | Description | Reqd. QTY CBR1000RR 4 | 5 | 6 | 7 | Serial No. | | Parts catalogue code |
|---|---|---|---|---|---|---|---|---|---|
| 6 | 35100-MEL-641 | SWITCH ASSY., COMBINATION & LOCK | 1 | 1 | - | - | -------- | -------- | BR,E,ED,EK,F,G,KO,U,2ED,2F,2G,2KO,2U,3E,4EK |
| | 35100-MEL-670 | ---------- | 1 | - | - | - | -------- | -------- | MX |
| | 35100-MEL-671 | ---------- | - | 1 | - | - | -------- | -------- | MX |
| | 35100-MEL-A20 | ---------- | - | - | 1 | 1 | -------- | -------- | MX |
| | 35100-MEL-D20 | ---------- | - | - | 1 | 1 | -------- | -------- | BR,E,ED,EK,F,KO,U,2ED,2F,3E,4EK |
| 7 | 35101-MEL-641 | BASE COMP., CONTACT --------- | 1 | - | - | - | -------- | -------- | BR,E,ED,F,G,KO,U |
| | | | - | 1 | 1 | 1 | | | |
| | 35101-MEL-670 | ---------- | 1 | - | - | - | -------- | -------- | MX |
| 8 | 35106-MAT-A00 | COVER, COMBINATION SWITCH --- | 1 | 1 | 1 | 1 | -------- | -------- | MX |
| 9 | 35113-MBW-601 | EMBLEM ---------- | 1 | 1 | 1 | 1 | -------- | -------- | BR,E,ED,EK,F,G,KO,U,2ED,2F,2G,2KO,2U,3E,4EK |
| 10 | 35121-MAS-G01 | KEY, BLANK (TYPE 1) --------- | (1) | (1) | (1) | (1) | -------- | -------- | MX |
| 11 | 35121-MBW-601 | KEY, BLANK ---------- | (1) | (1) | (1) | (1) | -------- | -------- | BR,E,ED,EK,F,G,KO,U,2ED,2F,2G,2KO,2U,3E,4EK |
| 12 | 53100-MEL-000 | PIPE COMP., R. STEERING HANDLE | 1 | - | - | - | | | |
| | 53100-MEL-D00 | ---------- | - | 1 | 1 | 1 | | | |
| 13 | 53105-MEE-940 | WEIGHT, STEERING HANDLE ----- | 2 | 2 | 2 | 2 | | | |
| 14 | 53105-KV3-000 | WEIGHT B, STEERING HANDLE --- | 2 | 2 | 2 | 2 | | | |
| 15 | 53107-KM9-000 | RUBBER, HANDLE WEIGHT (B) --- | 2 | 2 | - | - | | | |
| | 53107-MEL-D20 | ---------- | - | - | 2 | 2 | | | |
| 16 | 53108-KAZ-000 | RING, HANDLE WEIGHT SNAP ---- | 2 | - | - | - | | | |
| | 53108-MJ0-000 | ---------- | - | 2 | 2 | 2 | | | |
| 17 | 53109-MEE-000 | PLATE, HANDLE WEIGHT -------- | 2 | - | - | - | | | |
| 18 | 53109-MV4-000 | RUBBER B, HANDLE WEIGHT ----- | 2 | 2 | 2 | 2 | | | |
| 19 | 53150-MEL-000 | PIPE COMP., L. STEERING HANDLE | 1 | - | - | - | | | |
| | 53150-MEL-D00 | ---------- | - | 1 | 1 | 1 | | | |
| 20 | 53174-GS9-610 | PLUG, HANDLE LEVER ---------- | 2 | 2 | 2 | 2 | | | |

# HANDLE PIPE/TOP BRIDGE



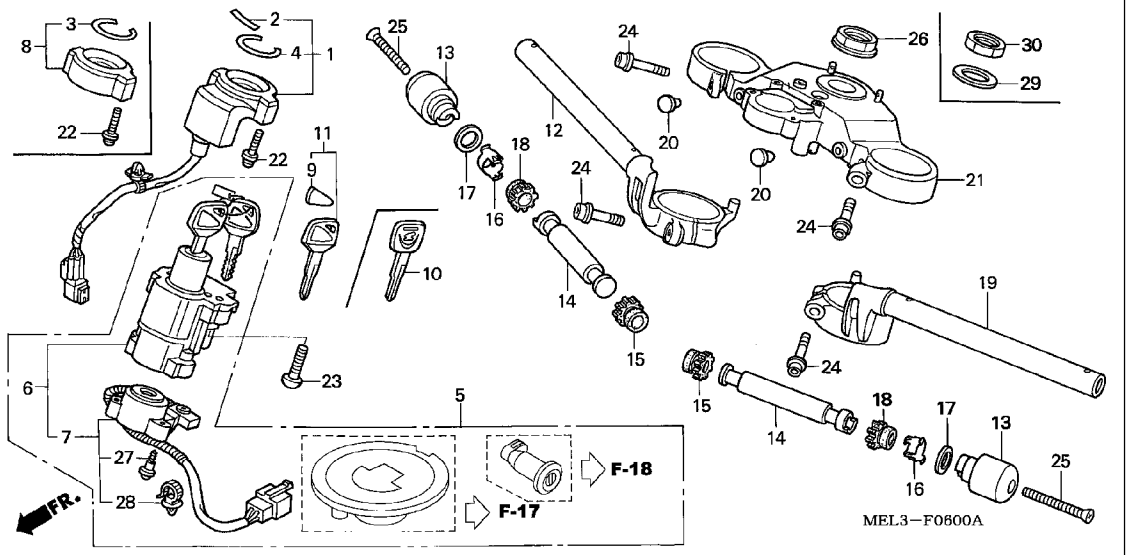


| Ref. No. | Part No. | Description | Reqd. QTY CBR1000RR 4 | 5 | 6 | 7 | Serial No. | Parts catalogue code |
|---|---|---|---|---|---|---|---|---|
| 21 | 53230-MEL-000 | BRIDGE, FORK TOP ..... | 1 | 1 | 1 | 1 | | |
| 22 | 90020-MBW-610 | SCREW-WASHER, 5X22 ..... | 2 | 2 | 2 | 2 | | |
| 23 | 90107-MBG-000 | BOLT, ONE-WAY, 8MM ..... | 2 | 2 | 2 | 2 | | |
| 24 | 90140-MCJ-750 | BOLT, FLANGE SOCKET, 8X40 ... | 4 | 4 | 4 | 4 | | |
| 25 | 90191-KT7-750 | SCREW, OVAL, 6X60 ..... | 2 | 2 | 2 | 2 | | |
| 26 | 90304-MK3-000 | NUT, STEERING STEM ..... | 1 | 1 | - | - | | |
| 27 | 91059-KY2-711 | SCREW, TAPPING, 3X16 ..... | 3 | 3 | 3 | 3 | | |
| 28 | 91540-SOA-003 | CLIP, HARNESS BAND (NATURAL) (96.9MM) | 1 | - | - | - | -------- -------- | MX |
| | 91541-SOA-003 | CLIP, HARNESS BAND (BLACK) (145MM) | 1 | - | - | - | -------- -------- | BR,E,ED,F,G,KO,U |
| | | | - | 1 | 1 | 1 | | |
| 29 | 53215-MEE-D00 | WASHER, STEERING STEM NUT ... | - | - | 1 | 1 | | |
| 30 | 90304-MEE-D00 | NUT, STEERING STEM ..... | - | - | 1 | 1 | | |

# STEERING DAMPER



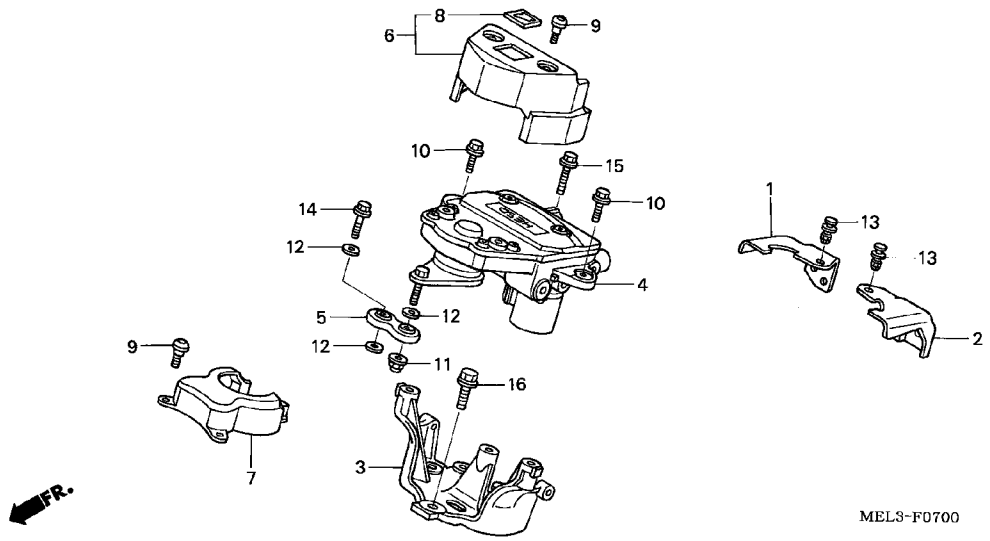


| Ref. No. | L.O.N. | (Relative ref. Number) Description | F.R.T. |
|---|---|---|---|
| 3 | 5101C5 | STAY, STEERING DAMPER ····· | 0.3 |
| 4 | | (1,2) | |
| | 5101C4 | DAMPER, STEERING ····· | 0.3 |
| 6 | | (7) | |
| | 5101C3 | COVER, STEERING DAMPER ····· | 0.1 |

| Ref. No. | Part No. | Description | Reqd. QTY CBR1000RR 4 | 5 | 6 | 7 | Serial No. | | Parts catalogue code |
|---|---|---|---|---|---|---|---|---|---|
| 1 | 32108-MEL-000 | GUIDE, R. HARNESS CLAMP ····· | 1 | 1 | 1 | 1 | | | |
| 2 | 32118-MEL-000 | GUIDE, L. HARNESS CLAMP ····· | 1 | 1 | 1 | 1 | | | |
| 3 | 50120-MEL-000 | STAY, STEERING DAMPER ····· | 1 | 1 | 1 | 1 | | | |
| 4 | 53700-MEL-003 | DAMPER ASSY., STEERING ····· | 1 | - | - | - | -------- | -------- | KO |
| | 53700-MEL-013 | ····· | 1 | - | - | - | -------- | -------- | BR,E,ED,F,G,MX,U |
| | | | - | 1 | - | - | | | |
| | 53700-MEL-023 | ····· | - | - | 1 | 1 | | | |
| 5 | 53731-MEL-003 | ARM COMP., SECOND ····· | 1 | - | - | - | | | |
| | | | - | 1 | - | - | -------- | -------- | F,G,2F,2G |
| | | | - | 1 | - | - | -------- | 5M100564 | BR,KO,MX,2KO |
| | | | - | 1 | - | - | -------- | 5M101332 | U,2U |
| | | | - | 1 | - | - | -------- | 5M112130 | E,ED,EK,2ED,3E,4EK |
| | 53731-MEL-013 | ····· | - | 1 | - | - | 5M100565 | -------- | BR,KO,MX,2KO |
| | | | - | 1 | - | - | 5M101333 | -------- | U,2U |
| | | | - | 1 | - | - | 5M112131 | -------- | E,ED,EK,2ED,3E,4EK |
| | | | - | - | 1 | 1 | | | |
| 6 | 53740-MEL-000 | COVER COMP., STEERING DAMPER | 1 | 1 | 1 | 1 | | | |
| 7 | 53741-MEL-000 | TOP COVER, STEERING DAMPER ·· | 1 | 1 | 1 | 1 | | | |
| 8 | 86150-GFC-901 | EMBLEM, PRODUCT (MARUI) ····· | 1 | 1 | 1 | 1 | | | |
| 9 | 90112-MBS-000 | SCREW, PAN, 5X13 ····· | 4 | 4 | - | - | | | |
| | 90112-MEL-D20 | BOLT, SPECIAL, 5X13 ····· | - | - | 4 | 4 | | | |
| 10 | 90112-MEL-000 | BOLT, FLANGE, 6X18 ····· | 2 | 2 | 2 | 2 | | | |
| 11 | 90301-473-003 | NUT, U, 6MM ····· | 1 | 1 | 1 | 1 | | | |
| 12 | 90443-MEL-000 | WASHER, 6MM ····· | 3 | 3 | 3 | 3 | | | |
| 13 | 91549-MCA-000 | CLIP, PANEL FIXING ····· | 2 | 2 | 2 | 2 | | | |
| 14 | 96001-06020-00 | BOLT, FLANGE, 6X20 ····· | 1 | 1 | 1 | 1 | | | |
| 15 | 96001-06025-07 | BOLT, FLANGE, 6X25 ····· | 1 | 1 | 1 | 1 | | | |
| 16 | 96300-08022-00 | BOLT, FLANGE, 8X22 ····· | 3 | 3 | 3 | 3 | | | |

# STEERING STEM



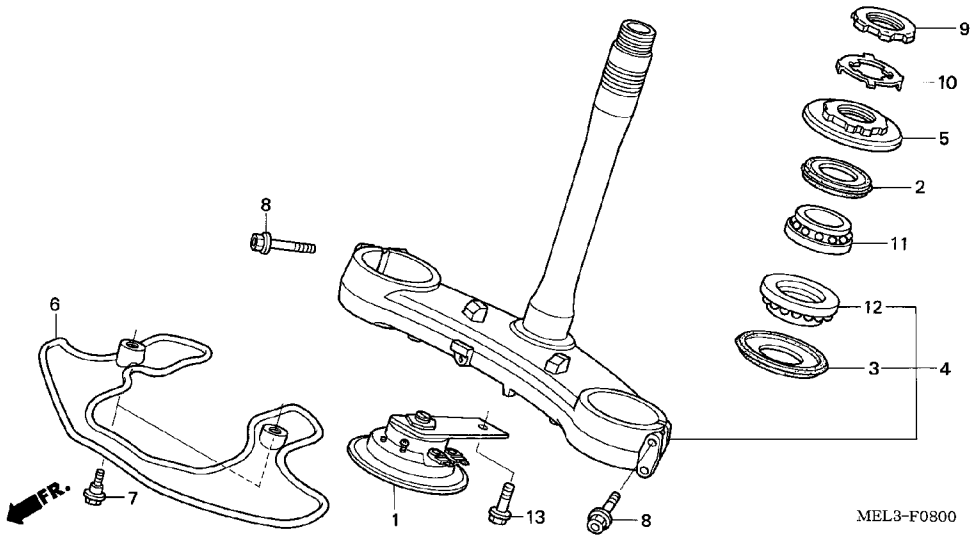


| Ref. No. | L.O.N. | (Relative ref. Number) Description | F.R.T. |
|---|---|---|---|
| 1 | 616169 | HORN(S) ---------- | 0.1 |
| 4 | 510100 | STEM OR SHAFT ASSY., STEERING | 1.4 |
| | 510100A | .Replace upper bearing add --- | 0.1 |
| 5 | | (2) | |
| | 5101B2 | THREAD, STEERING HEAD TOP ---- | 0.5 |
| 6 | 4131D0 | PROTECTOR, WIND ---------- | 0.1 |
| 11 | 5101B6 | BEARING, HEAD PIPE :UPPER ---- | 1.4 |
| | 5101C7 | BEARING, HEAD PIPE :BOTH ----- | 1.6 |
| 12 | | (3) | |
| | 5101B7 | BEARING, HEAD PIPE :LOWER ---- | 1.5 |
| | 5101C7 | BEARING, HEAD PIPE :BOTH ----- | 1.6 |

| Ref. No. | Part No. | Description | Reqd. QTY CBR1000RR 4 | 5 | 6 | 7 | Serial No. | Parts catalogue code |
|---|---|---|---|---|---|---|---|---|
| 1 | 38110-MBB-000 | HORN ASSY. (HIGH) ---------- | 1 | 1 | 1 | 1 | | |
| 2 | 53214-MCJ-751 | DUST SEAL, STEERING HEAD (ARAI) | 1 | 1 | 1 | - | | |
| | 53214-KA4-701 | ---------- | - | - | - | 1 | | |
| 3 | 53214-371-010 | DUST SEAL, STEERING HEAD ---- | 1 | 1 | 1 | 1 | | |
| 4 | 53219-MEL-000 | STEM SUB ASSY., STEERING ---- | 1 | 1 | - | - | | |
| | 53219-MEL-D20 | ---------- | - | - | 1 | 1 | | |
| 5 | 53220-MCJ-D10 | THREAD COMP., STEERING HEAD TOP | 1 | 1 | 1 | 1 | | |
| 6 | 61403-MEL-000 | PROTECTOR, WIND ---------- | 1 | 1 | 1 | 1 | | |
| 7 | 90113-MAS-E00 | BOLT, FLANGE, 6MM ---------- | 2 | 2 | 2 | 2 | | |
| 8 | 90134-MEL-000 | BOLT, 8X45 ---------- | 4 | 4 | 4 | 4 | | |
| 9 | 90302-425-830 | THREAD B, STEERING HEAD TOP - | 1 | 1 | 1 | 1 | | |
| 10 | 90506-425-830 | WASHER, LOCK ---------- | 1 | 1 | 1 | 1 | | |
| 11 | 91015-KT8-005 | BEARING, HEAD PIPE UPPER (KOYO) | 1 | 1 | 1 | 1 | | |
| 12 | 91016-KT8-005 | BEARING, HEAD PIPE UNDER (KOYO) | 1 | 1 | 1 | 1 | | |
| 13 | 96300-08012-07 | BOLT, FLANGE, 8X12 ---------- | 1 | 1 | 1 | 1 | | |

# FRONT FENDER



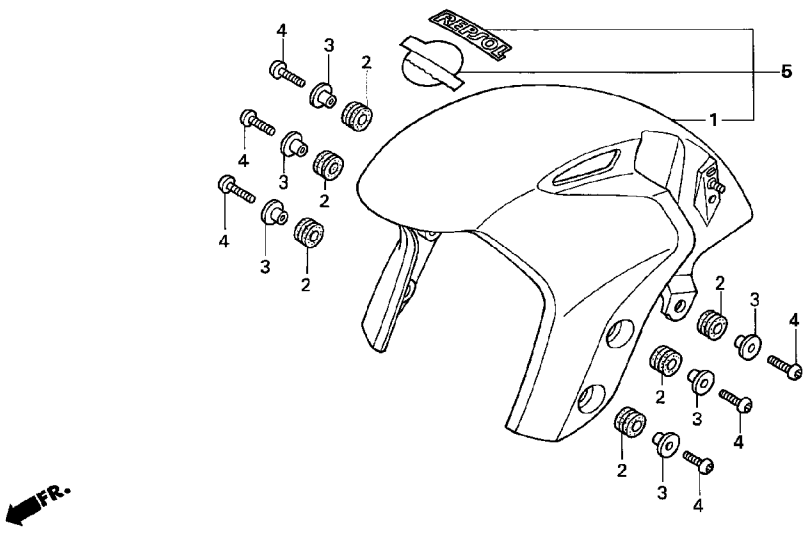


| Ref. No. | L.O.N. | (Relative ref. Number) Description | F.R.T. |
|---|---|---|---|
| 1 | | (5) | |
| | 4131B7 | FENDER, FRONT ..... | 0.2 |

| Ref. No. | Part No. | Description | Reqd. QTY CBR1000RR 4 | 5 | 6 | 7 | Serial No. | | Parts catalogue code |
|---|---|---|---|---|---|---|---|---|---|
| 1 | 61100-MEL-000ZA | FENDER COMP., FR. | | | | | | | |
| | | *NH1*.....BLACK | 1 | 1 | - | - | -------- | -------- | E,ED,EK,F,G,KO,MX,U |
| | | | - | 1 | - | - | -------- | -------- | BR |
| | 61100-MEL-000ZB | *NH411M*FORCE SILVER METALLIC | 1 | - | - | - | -------- | -------- | BR,MX |
| | 61100-MEL-000ZC | *R258*.....WINNING RED | 1 | - | - | - | | | |
| | | | - | 1 | - | - | -------- | -------- | BR,E,ED,EK,F,G,KO,MX,U |
| | 61100-MEL-000ZD | *YR183M*....TITANIUM METALLIC | - | 1 | - | - | -------- | -------- | BR,MX,U |
| | 61100-MEL-000ZE | *PB215C*..CANDY TAHITIAN BLUE | - | 1 | - | - | -------- | -------- | E,ED,EK,F,G |
| | 61100-MEL-D20ZA | *NHB01*.....GRAPHITE BLACK | - | - | 1 | 1 | -------- | -------- | E,ED,EK,F,KO,MX,U |
| | | | - | - | - | 1 | -------- | -------- | BR |
| | 61100-MEL-D20ZB | *NH167MU* IRON NAIL SILVER METALLIC-U | - | - | 1 | - | -------- | -------- | BR,E,ED,EK,F,MX,U |
| | 61100-MEL-D20ZC | *R258*.....WINNING RED | - | - | 1 | 1 | | | |
| | 61100-MEL-D20ZD | *PB284C*...CANDY PHOENIX BLUE | - | - | 1 | - | -------- | -------- | MX,U |
| | 61100-MEL-D20ZF | *NHA30M* DIGITAL SILVER METALLIC | - | - | - | 1 | -------- | -------- | MX,U |
| 2 | 80101-165-000 | RUBBER, RR. FENDER CUSHION .. | 6 | 6 | 6 | 6 | | | |
| 3 | 84706-163-670 | COLLAR, TAILLIGHT MOUNTING .. | 6 | 6 | 6 | 6 | | | |
| 4 | 90118-MEL-000 | SCREW, PAN, 6X20 ..... | 6 | 6 | 6 | 6 | | | |
| 5 | 61110-MEL-D10ZA | FENDER SET, FR. *TYPE1*(WL) . | - | 1 | - | - | -------- | -------- | 2ED,2F,2G,2KO,2U,3E,4EK |

# FRONT FORK

J 1

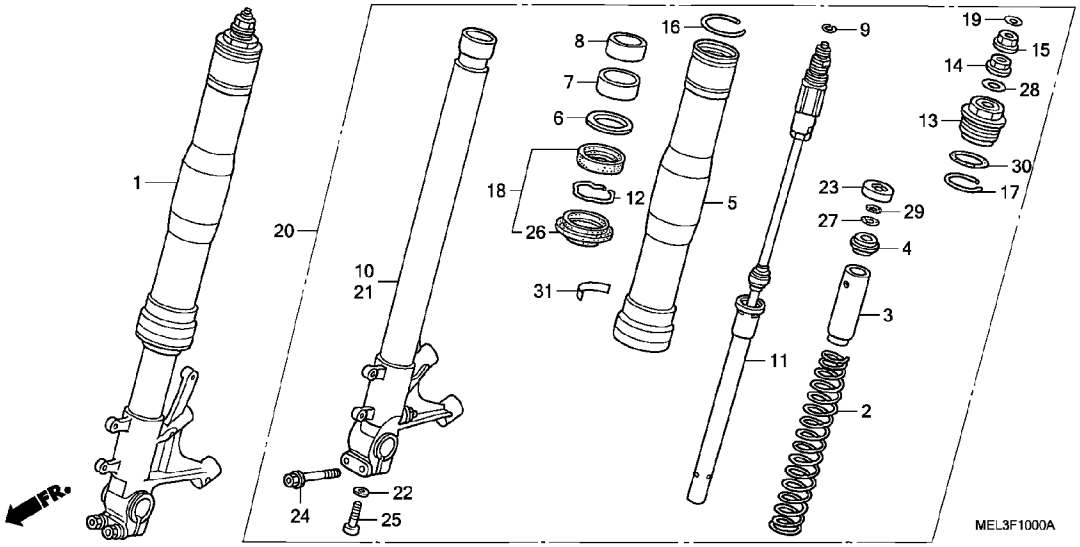


| Ref. No. | L.O.N. | (Relative ref. Number) Description | F.R.T. |
|---|---|---|---|
| 1 | 5111C3 | FORK ASSY., FRONT :RIGHT ····· | 0.6 |
| | 5111C4 | FORK ASSY., FRONT :BOTH ····· | 0.8 |
| 2 | | (3,13,30) | |
| | 5111C5 | SPRING, FRONT FORK :LEFT ····· | 0.8 |
| | 5111C6 | SPRING, FRONT FORK :RIGHT ···· | 0.8 |
| | 5111C7 | SPRING, FRONT FORK :BOTH ····· | 1.2 |
| 5 | 5111C8 | TUBE, OUTER :LEFT ····· | 1.3 |
| | 5111C9 | TUBE, OUTER :RIGHT ····· | 1.3 |
| | 5111D0 | TUBE, OUTER :BOTH ····· | 2.2 |
| 10 | 5111D5 | PIPE, SLIDE :RIGHT ····· | 1.3 |
| | 5111D6 | PIPE, SLIDE :BOTH ····· | 2.2 |
| 11 | | (22,25) | |
| | 5111D8 | DAMPER, FRONT FORK :LEFT ····· | 1.2 |
| | 5111D9 | DAMPER, FRONT FORK :RIGHT ···· | 1.2 |
| | 5111E0 | DAMPER, FRONT FORK :BOTH ····· | 2.0 |
| 18 | | (7,8) | |
| | 5111E7 | SEAL SET, FRONT FORK :LEFT ··· | 1.2 |
| | 5111E8 | SEAL SET, FRONT FORK :RIGHT ·· | 1.2 |
| | 5111E9 | SEAL SET, FRONT FORK :BOTH ··· | 2.0 |
| 20 | 5111C2 | FORK ASSY., FRONT :LEFT ····· | 0.6 |
| | 5111C4 | FORK ASSY., FRONT :BOTH ····· | 0.8 |
| 21 | 5111D4 | PIPE, SLIDE :LEFT ····· | 1.3 |
| | 5111D6 | PIPE, SLIDE :BOTH ····· | 2.2 |

| Ref. No. | Part No. | Description | Reqd. QTY CBR1000RR 4 | 5 | 6 | 7 | Serial No. | Parts catalogue code |
|---|---|---|---|---|---|---|---|---|
| 1 | 51400-MEL-003 | FORK ASSY., R. FR. ····· | 1 | 1 | - | - | | |
| | 51400-MEL-D21 | ····· | - | - | 1 | 1 | -------- -------- | BR,ED,F,KO,MX,U |
| | 51400-MEL-E21 | ····· | - | - | 1 | 1 | -------- -------- | E,EK |
| | 51400-MEL-D41 | ····· | - | - | - | 1 | -------- -------- | 2ED,2F |
| | 51400-MEL-E41 | ····· | - | - | - | 1 | -------- -------- | 3E,4EK |
| 2 | 51401-MEL-003 | SPRING, FR. FORK ····· | 2 | 2 | - | - | | |
| | 51401-MEL-D21 | ····· | - | - | 2 | 2 | | |
| 3 | 51403-MCF-003 | COLLAR, SPRING ····· | 2 | 2 | 2 | 2 | | |
| 4 | 51406-MW4-003 | STOPPER, SPRING SEAT ····· | 2 | 2 | 2 | 2 | | |
| 5 | 51410-MEL-003 | TUBE, OUTER ····· | 2 | 2 | 2 | - | | |
| | | | - | - | - | 2 | -------- -------- | BR,E,ED,EK,F,KO,MX,U |
| | 51410-MEL-D41 | ····· | - | - | - | 2 | -------- -------- | 2ED,2F,3E,4EK |
| 6 | 51412-MEL-003 | RING, BACK UP ····· | 2 | 2 | 2 | 2 | | |
| 7 | 51414-MAZ-003 | BUSH, GUIDE ····· | 2 | 2 | 2 | 2 | | |
| 8 | 51415-MAZ-003 | BUSH, SLIDER ····· | 2 | 2 | 2 | 2 | | |
| 9 | 51423-MCJ-751 | RING B, STOPPER ····· | 2 | 2 | 2 | 2 | | |
| 10 | 51425-MEL-003 | PIPE COMP., R. SLIDE ····· | 1 | 1 | - | - | | |
| | 51425-MEL-D21 | PIPE, R. SLIDE ····· | - | - | 1 | 1 | -------- -------- | BR,ED,F,KO,MX,U,2ED,2F |
| | 51425-MEL-E21 | ····· | - | - | 1 | 1 | -------- -------- | E,EK,3E,4EK |
| 11 | 51430-MEL-003 | DAMPER COMP., FR. ····· | 2 | 2 | - | - | | |
| | 51430-MEL-D21 | ····· | - | - | 2 | 2 | | |
| 12 | 51447-KA4-711 | RING, OIL SEAL STOPPER ····· | 2 | 2 | 2 | 2 | | |
| 13 | 51450-MEL-003 | BOLT, FR. FORK ····· | 2 | 2 | 2 | 2 | | |
| 14 | 51451-MEL-003 | NUT, LOCK ····· | 2 | 2 | 2 | 2 | | |
| 15 | 51453-MCJ-751 | PLATE B, ADJUSTING ····· | 2 | 2 | 2 | 2 | | |
| 16 | 51455-MW4-003 | RING, STOPPER ····· | 2 | 2 | 2 | 2 | | |

# FRONT FORK



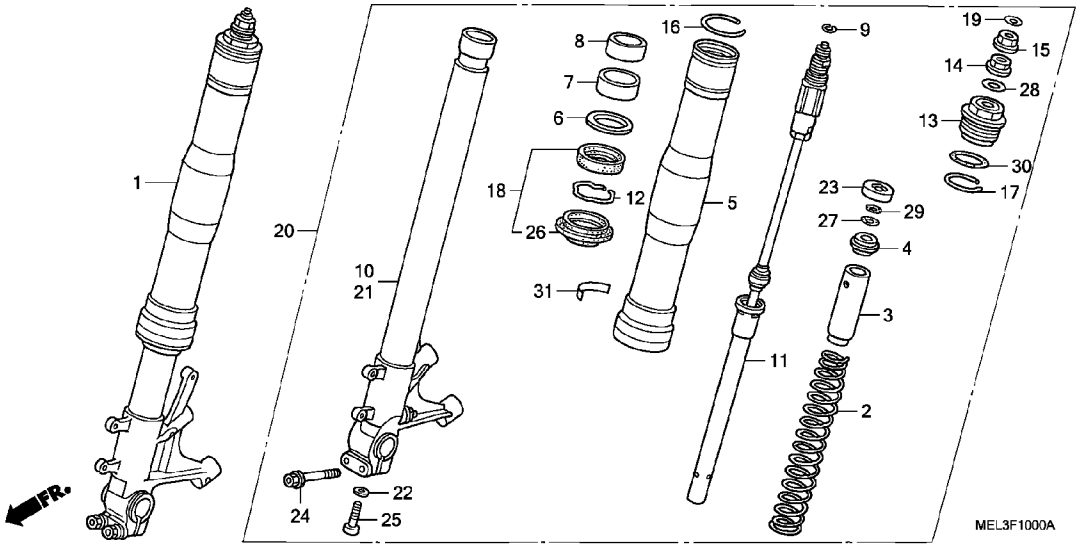


| Ref. No. | Part No. | Description | Reqd. QTY CBR1000RR 4 | 5 | 6 | 7 | Serial No. | Parts catalogue code |
|---|---|---|---|---|---|---|---|---|
| 17 | 51456-MCJ-751 | RING, STOPPER | 2 | 2 | 2 | 2 | | |
| 18 | 51490-MEJ-003 | SEAL SET, FR. FORK | 2 | 2 | 2 | 2 | | |
| 19 | 51496-MCJ-751 | LABEL | 2 | 2 | 2 | 2 | | |
| 20 | 51500-MEL-003 | FORK ASSY., L. FR. | 1 | 1 | - | - | | |
| | 51500-MEL-D21 | | - | - | 1 | 1 | -------- -------- | BR,ED,F,KO,MX,U |
| | 51500-MEL-E21 | | - | - | 1 | 1 | -------- -------- | E,EK |
| | 51500-MEL-D41 | | - | - | - | 1 | -------- -------- | 2ED,2F |
| | 51500-MEL-E41 | | - | - | - | 1 | -------- -------- | 3E,4EK |
| 21 | 51525-MEL-003 | PIPE, L. SLIDE | 1 | 1 | - | - | | |
| | 51525-MEL-D21 | | - | - | 1 | 1 | -------- -------- | BR,ED,F,KO,MX,U,2ED,2F |
| | 51525-MEL-E21 | | - | - | 1 | 1 | -------- -------- | E,EK,3E,4EK |
| 22 | 52442-KA3-711 | WASHER, SPECIAL, 10MM | 2 | 2 | 2 | 2 | | |
| 23 | 53702-MCJ-751 | PLATE, SPRING ADJUSTER | 2 | 2 | 2 | 2 | | |
| 24 | 90109-MR7-000 | BOLT, FLANGE, 8X45 | 4 | 4 | 4 | 4 | | |
| 25 | 90126-MR7-003 | BOLT, SOCKET, 10X35 | 2 | 2 | 2 | 2 | | |
| 26 | 91254-MEJ-003 | DUST SEAL | 2 | 2 | 2 | 2 | | |
| 27 | 91255-MCJ-751 | O-RING, 10.8X2.4 | 2 | 2 | 2 | 2 | | |
| 28 | 91256-MCJ-751 | O-RING, 23.3X2.4 | 2 | 2 | 2 | 2 | | |
| 29 | 91257-MCJ-751 | O-RING, 9.5X1.5 | 2 | 2 | 2 | 2 | | |
| 30 | 91258-GF4-003 | O-RING, 42.2X2.4 | 2 | 2 | 2 | 2 | | |
| 31 | 52497-MEE-003 | MARK, SHOWA | - | - | - | 2 | -------- -------- | 2ED,2F,3E,4EK |

# FRONT BRAKE CALIPER



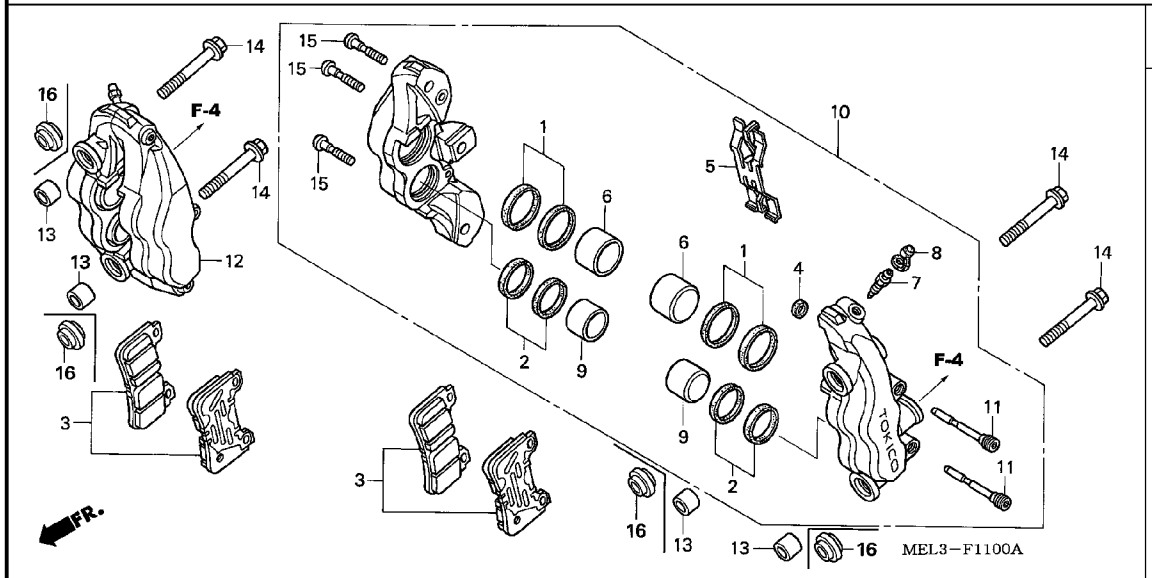


| Ref. No. | L.O.N. | (Relative ref. Number) Description | F.R.T. |
|---|---|---|---|
| 3 | 7111A0 | SHOE(PAD) SET, BRAKE :LEFT FRONT ····· | 0.2 |
| | 7111A1 | SHOE(PAD) SET, BRAKE :RIGHT FRONT ····· | 0.2 |
| | 7111A2 | SHOE(PAD) SET, BRAKE :BOTH FRONT ····· | 0.4 |
| 6 | | (1,2,9) | |
| | 7111D2 | PISTON, FRONT BRAKE CALIPER :LEFT ····· .INCLUDES: Bleed brakes .NOTE: Same time for two units or more | 0.8 |
| | 7111D3 | PISTON, FRONT BRAKE CALIPER :RIGHT ····· .INCLUDES: Bleed brakes .NOTE: Same time for two units or more | 0.8 |
| | 7111D4 | PISTON, FRONT BRAKE CALIPER :BOTH ····· .INCLUDES: Bleed brakes | 1.4 |
| 10 | 7111B5 | CALIPER, FRONT BRAKE :LEFT ··· .INCLUDES: Bleed brakes | 0.4 |
| | 7111B7 | CALIPER, FRONT BRAKE :BOTH ··· .INCLUDES: Bleed brakes | 0.6 |
| +12 | 7111B6 | CALIPER, FRONT BRAKE :RIGHT ·· | 0.4 |

| Ref. No. | Part No. | Description | Reqd. QTY CBR1000RR 4 | 5 | 6 | 7 | Serial No. | | Parts catalogue code |
|---|---|---|---|---|---|---|---|---|---|
| 1 | 06451-MEL-003 | SEAL SET, PISTON (32) ····· | 4 | 4 | 4 | 4 | | | |
| 2 | 06452-MEL-003 | SEAL SET, PISTON (30) ····· | 4 | 4 | 4 | 4 | | | |
| 3 | 06455-MEL-003 | PAD SET, FR. ····· | 2 | 2 | - | - | | | |
| | 06455-MEL-D21 | ····· | - | - | 2 | 2 | | | |
| 4 | 45103-MEL-003 | SEAL, JOINT ····· | 2 | 2 | 2 | 2 | | | |
| 5 | 45106-MEL-003 | SPRING, PAD ····· | 2 | 2 | 2 | 2 | | | |
| 6 | 45107-MEL-003 | PISTON (32) ····· | 4 | 4 | 4 | 4 | | | |
| 7 | 45111-MEL-003 | SCREW, BLEEDER ····· | 2 | 2 | - | - | | | |
| | 45111-MEL-013 | ····· | - | - | 2 | 2 | | | |
| 8 | 45112-MEL-003 | CAP, BLEEDER ····· | 2 | 2 | 2 | 2 | | | |
| 9 | 45117-MEL-003 | PISTON (30) ····· | 4 | 4 | 4 | 4 | | | |
| 10 | 45150-MEL-003 | CALIPER SUB ASSY., L. FR. (TOKICO) | 1 | - | - | - | -------- | -------- | KO |
| | | | 1 | - | - | - | -------- | 4M000377 | U |
| | | | 1 | - | - | - | -------- | 4M002848 | G |
| | | | 1 | - | - | - | -------- | 4M006410 | E,ED |
| | 45150-MEL-013 | ····· | 1 | - | - | - | -------- | -------- | BR,F,MX |
| | | | 1 | - | - | - | 4M000378 | -------- | U |
| | | | 1 | - | - | - | 4M002849 | -------- | G |
| | | | 1 | - | - | - | 4M006411 | -------- | E,ED |
| | | | - | 1 | - | - | | | |
| | 45150-MEL-023 | ····· | - | - | 1 | - | | | |
| | | | - | - | - | 1 | -------- | -------- | BR,E,ED,EK,F,KO,MX,U |
| | 45150-MEL-D41 | ····· | - | - | - | 1 | -------- | -------- | 2ED,2F,3E,4EK |

# F-11 FRONT BRAKE CALIPER

J 4

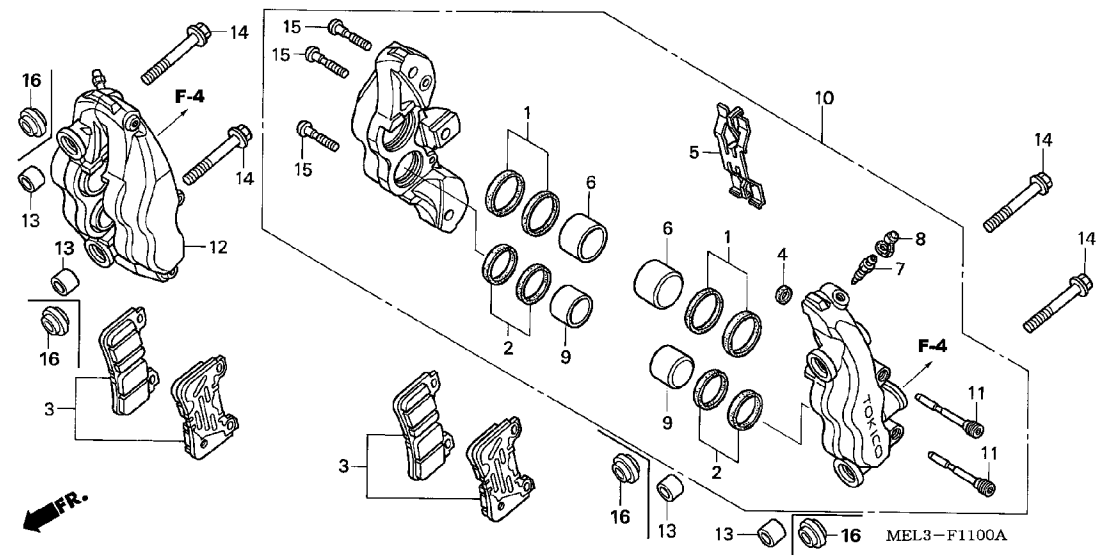


| Ref. No. | L.O.N. | (Relative ref. Number) Description | F.R.T. |
|---|---|---|---|
| +12 | | .INCLUDES: Bleed brakes | |
| | 7111B7 | CALIPER, FRONT BRAKE :BOTH ··· | 0.6 |
| | | .INCLUDES: Bleed brakes | |

| Ref. No. | Part No. | Description | Reqd. QTY CBR1000RR 4 | 5 | 6 | 7 | Serial No. | Parts catalogue code |
|---|---|---|---|---|---|---|---|---|
| 11 | 45215-MEL-003 | PIN, HANGER ····· | 4 | - | - | - | -------- -------- | KO |
| | | | 4 | - | - | - | -------- 4M000377 | U |
| | | | 4 | - | - | - | -------- 4M002848 | G |
| | | | 4 | - | - | - | -------- 4M006410 | E,ED |
| | 45215-MEL-013 | ····· | 4 | - | - | - | -------- -------- | BR,F,MX |
| | | | 4 | - | - | - | 4M000378 -------- | U |
| | | | 4 | - | - | - | 4M002849 -------- | G |
| | | | 4 | - | - | - | 4M006411 -------- | E,ED |
| | | | - | 4 | 4 | 4 | | |
| 12 | 45250-MEL-003 | CALIPER SUB ASSY., R. FR. ··· | 1 | - | - | - | -------- -------- | KO |
| | | | 1 | - | - | - | -------- 4M000377 | U |
| | | | 1 | - | - | - | -------- 4M002848 | G |
| | | | 1 | - | - | - | -------- 4M006410 | E,ED |
| | 45250-MEL-013 | ····· | 1 | - | - | - | -------- -------- | BR,F,MX |
| | | | 1 | - | - | - | 4M000378 -------- | U |
| | | | 1 | - | - | - | 4M002849 -------- | G |
| | | | 1 | - | - | - | 4M006411 -------- | E,ED |
| | | | - | 1 | - | - | | |
| | 45250-MEL-023 | ····· | - | - | 1 | - | | |
| | | | - | - | - | 1 | -------- -------- | BR,E,ED,EK,F,KO,MX,U |
| | 45250-MEL-D41 | ····· | - | - | - | 1 | -------- -------- | 2ED,2F,3E,4EK |
| 13 | 51497-MEL-000 | SPACER, FR. FORK ····· | 4 | 4 | - | - | | |
| 14 | 90131-MEL-000 | BOLT, FLANGE, 10X57 ····· | 4 | 4 | - | - | | |
| | 90131-MEL-D20 | BOLT, FLANGE, 10X62 ····· | - | - | 4 | 4 | | |
| 15 | 90141-MEL-003 | BOLT, TORX, 8X40 ····· | 6 | 6 | 6 | 6 | | |
| 16 | 51497-MEL-D20 | SPACER, FR. FORK ····· | - | - | 4 | 4 | | |

3

# FRONT WHEEL



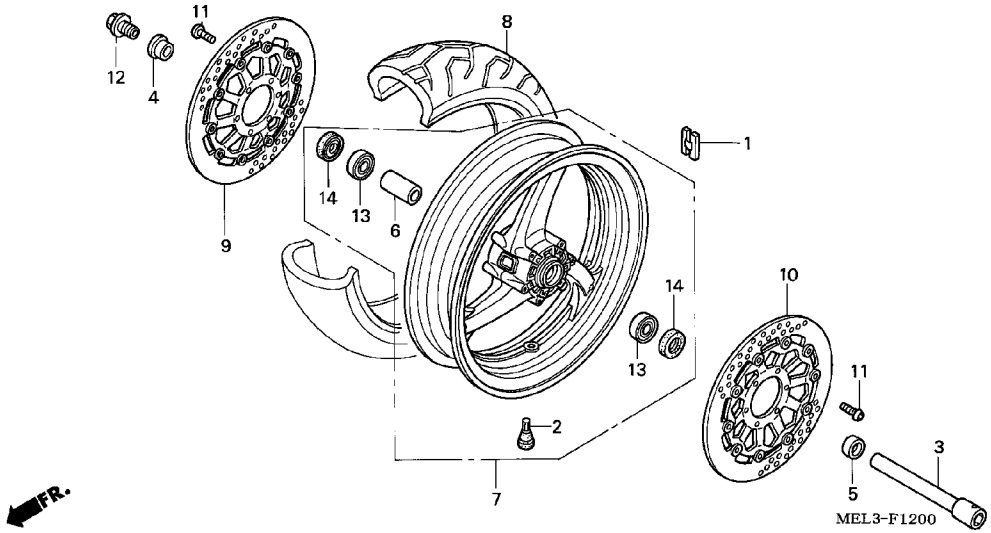


| Ref. No. | L.O.N. | (Relative ref. Number) Description | F.R.T. |
|---|---|---|---|
| 1 | 7101A6 | WEIGHT, BALANCE :FRONT ····· | 0.7 |
| 3 | 710151 | AXLE, FRONT WHEEL ····· | 0.4 |
| 7 | 7101D4 | FRONT WHEEL ····· | 1.1 |
| | | .INCLUDES: Balance | |
| 8 | | (2) | |
| | 710139 | FRONT TIRE(ONE) ····· | 1.0 |
| | | .INCLUDES: Balance | |
| 9 | 7111D8 | DISC, FRONT BRAKE :RIGHT ····· | 0.5 |
| | 7111D9 | DISC, FRONT BRAKE :BOTH ····· | 0.6 |
| 10 | 7111D7 | DISC, FRONT BRAKE :LEFT ····· | 0.5 |
| | 7111D9 | DISC, FRONT BRAKE :BOTH ····· | 0.6 |
| 13 | | (6) | |
| | 710115 | BEARING, FRONT WHEEL(ONE) ···· | 0.6 |
| | 710115G | .Replace 1 bearing add ····· | 0.1 |

3

| Ref. No. | Part No. | Description | Reqd. QTY CBR1000RR 4 | 5 | 6 | 7 | Serial No. | Parts catalogue code |
|---|---|---|---|---|---|---|---|---|
| 1 | 42704-MER-D00 | WEIGHT, BALANCE (10G) ····· | N | N | N | N | | |
| | 42705-MER-D00 | WEIGHT, BALANCE (20G) ····· | N | N | N | N | | |
| | 42706-MER-D00 | WEIGHT, BALANCE (30G) ····· | N | N | N | N | | |
| 2 | 42753-MCF-008 | VALVE, RIM (PIRELLI) ····· | 1 | 1 | 1 | 1 | | |
| | 42753-ML7-003 | VALVE, RIM (BRIDGESTONE) ···· | 1 | - | - | - | -------- -------- | BR,F,MX |
| | | | 1 | - | - | - | 4M000378 -------- | U |
| | | | 1 | - | - | - | 4M002849 -------- | G |
| | | | 1 | - | - | - | 4M006411 -------- | E,ED |
| | | | - | 1 | 1 | 1 | | |
| 3 | 44301-MCJ-000 | AXLE, FR. WHEEL ····· | 1 | 1 | 1 | 1 | | |
| 4 | 44311-MCJ-750 | COLLAR, R. FR. WHEEL SIDE ··· | 1 | 1 | - | - | | |
| | 44311-MEL-D20 | ····· | - | - | 1 | 1 | | |
| 5 | 44312-MCJ-750 | COLLAR, L. FR. WHEEL SIDE ··· | 1 | 1 | 1 | 1 | | |
| 6 | 44620-MCJ-000 | COLLAR, FR. WHEEL DISTANCE ·· | 1 | 1 | 1 | 1 | | |
| 7 | 44650-MEL-010ZA | WHEEL SUB ASSY., FR. | | | | | | |
| | | *NH1*.....BLACK | 1 | - | - | - | | |
| | | | - | 1 | - | - | -------- -------- | BR,E,ED,EK,F,G,KO,MX,U |
| | 44650-MEL-D10ZA | *YR250*.....VIBRANT ORANGE | - | 1 | - | - | -------- -------- | 2ED,2F,2G,2KO,2U,3E,4EK |
| | 44650-MEL-D20ZB | WHEEL SUB ASSY., FR. *TYPE1* | - | - | 1 | - | -------- -------- | MX,U |
| | 44650-MEL-D20ZC | WHEEL SUB ASSY., FR. *TYPE2* | - | - | 1 | 1 | -------- -------- | BR,E,ED,EK,F,KO |
| | | | - | - | - | 1 | -------- -------- | MX,U |
| | 44650-MEL-D40 | WHEEL SUB ASSY., FR. ····· | - | - | - | 1 | -------- -------- | 2ED,2F,3E,4EK |
| 8 | 44711-MEL-003 | TIRE, FR. (BRIDGESTONE) | | | | | | |
| | | (120/70ZR17 M/C 58W) | 1 | - | - | - | -------- -------- | BR,F,MX |
| | | | 1 | - | - | - | 4M000378 -------- | U |
| | | | 1 | - | - | - | 4M002849 -------- | G |
| | | | 1 | - | - | - | 4M006411 -------- | E,ED |
| | | | - | 1 | - | - | | |

# FRONT WHEEL



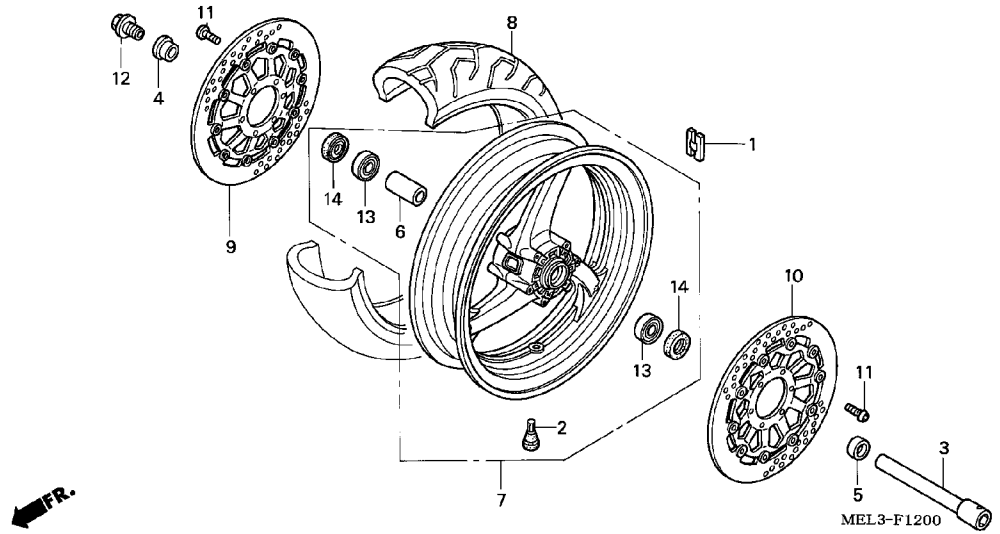


| Ref. No. | Part No. | Description | Reqd. QTY CBR1000RR 4 | 5 | 6 | 7 | Serial No. | Parts catalogue code |
|---|---|---|---|---|---|---|---|---|
| (8) | 44711-MEL-008 | TIRE, FR. (PIRELLI) (120/70ZR17 M/C 58W) | 1 | 1 | - | - | | |
| | 44711-MEL-D21 | TIRE, FR. (BRIDGESTONE) (120/70ZR17 M/C 58W) | - | - | 1 | 1 | | |
| | 44711-MEL-D22 | TIRE, FR. (PIRELLI) (120/70ZR17 M/C 58W) | - | - | 1 | 1 | | |
| 9 | 45120-MEL-003 | DISK COMP., R. FR. BRAKE | 1 | 1 | - | - | | |
| | 45120-MEL-D21 | | - | - | 1 | - | | |
| | 45120-MEL-D31 | | - | - | - | 1 | -------- -------- | BR,E,ED,EK,F,KO,MX,U |
| | 45120-MEL-D41 | | - | - | - | 1 | -------- -------- | 2ED,2F,3E,4EK |
| 10 | 45220-MEL-003 | DISK COMP., L. FR. BRAKE | 1 | 1 | - | - | | |
| | 45220-MEL-D21 | | - | - | 1 | - | | |
| | 45220-MEL-D31 | | - | - | - | 1 | -------- -------- | BR,E,ED,EK,F,KO,MX,U |
| | 45220-MEL-D41 | | - | - | - | 1 | -------- -------- | 2ED,2F,3E,4EK |
| 11 | 90106-MBB-000 | BOLT, DISK, 6X17 | 12 | 12 | 12 | 12 | | |
| 12 | 90305-MCJ-000 | BOLT, FR. AXLE | 1 | 1 | - | - | | |
| | 90305-MEL-D20 | | - | - | 1 | 1 | | |
| 13 | 91052-MCF-003 | BEARING, RADIAL BALL, 6005 | 2 | 2 | 2 | 2 | | |
| 14 | 91252-MCJ-003 | DUST SEAL, 31X47X7 | 2 | 2 | 2 | 2 | | |

# F-13 REAR BRAKE MASTER CYLINDER

J 7

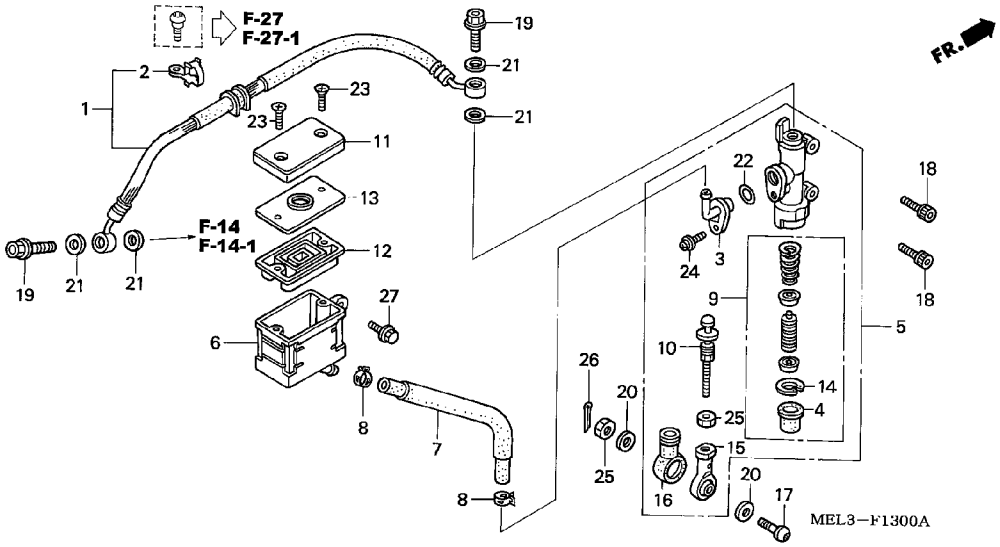


| Ref. No. | L.O.N. | (Relative ref. Number) Description | F.R.T. |
|---|---|---|---|
| 1 | 712130 | HOSE, REAR BRAKE ····· | 0.5 |
| | | .INCLUDES: Bleed brakes | |
| 5 | 712125 | CYLINDER, REAR BRAKE MASTER ·· | 0.6 |
| | | .INCLUDES: Bleed brakes | |
| 6 | 7121F6 | CUP, REAR MASTER CYLINDER OIL | 0.3 |
| 7 | 7121C2 | HOSE, REAR MASTER CYLINDER OIL CUP ····· | 0.4 |
| 9 | 7121H0 | PISTON SET, REAR BRAKE MASTER | 0.6 |
| | | .INCLUDES: Bleed brakes | |
| 12 | 7121G7 | DIAPHRAGM, REAR BRAKE MASTER CYLINDER ····· | 0.2 |

| Ref. No. | Part No. | Description | Reqd. QTY CBR1000RR 4 | 5 | 6 | 7 | Serial No. | Parts catalogue code |
|---|---|---|---|---|---|---|---|---|
| 1 | 43310-MEL-014 | HOSE COMP., RR. BRAKE ····· | 1 | 1 | - | - | | |
| | 43310-MEL-D21 | ····· | - | - | 1 | 1 | | |
| 2 | 43469-MEL-000 | CLAMPER, RR. BRAKE HOSE ····· | 1 | 1 | 1 | 1 | | |
| 3 | 43503-MER-D01 | CONNECTOR, MASTER CYLINDER ·· | 1 | 1 | 1 | 1 | | |
| 4 | 43504-MB2-006 | BOOT COMP. ····· | 1 | 1 | 1 | 1 | | |
| 5 | 43510-MEL-006 | CYLINDER SUB ASSY., RR. MASTER (NISSIN) | 1 | 1 | - | - | | |
| | 43510-MEL-D21 | ····· | - | - | 1 | 1 | | |
| 6 | 43511-KV3-831 | CUP COMP., OIL ····· | 1 | 1 | 1 | 1 | | |
| 7 | 43512-MEL-006 | HOSE, RR. MASTER CYLINDER ··· | 1 | 1 | 1 | 1 | | |
| 8 | 43514-KS6-701 | CLAMP, MASTER CYLINDER OIL HOSE | 2 | 2 | 2 | 2 | | |
| 9 | 43520-MG9-305 | PISTON SET, MASTER CYLINDER (NISSIN) | 1 | 1 | - | - | | |
| | 43520-MB2-305 | ····· | - | - | 1 | 1 | | |
| 10 | 43530-MCZ-006 | ROD COMP., PUSH ····· | 1 | 1 | 1 | 1 | | |
| 11 | 45513-KK1-771 | CAP, MASTER CYLINDER ····· | 1 | 1 | 1 | 1 | | |
| 12 | 45520-MG7-006 | DIAPHRAGM ····· | 1 | 1 | 1 | 1 | | |
| 13 | 45521-HA2-006 | PLATE, DIAPHRAGM ····· | 1 | 1 | 1 | 1 | | |
| 14 | 46182-500-013 | CIRCLIP ····· | 1 | 1 | 1 | 1 | | |
| 15 | 46505-MCJ-751 | ROD, TIE ····· | 1 | 1 | 1 | 1 | | |
| 16 | 46506-MCJ-750 | COVER, DUST ····· | 1 | 1 | 1 | 1 | | |
| 17 | 90125-MCJ-750 | BOLT, SOCKET, 8X30 ····· | 1 | 1 | 1 | 1 | | |
| 18 | 90135-MEL-000 | BOLT, SOCKET, 6X20 ····· | 2 | 2 | 2 | 2 | | |
| 19 | 90145-MS9-612 | BOLT, OIL, 10X22 ····· | 2 | 2 | 2 | 2 | | |
| 20 | 90443-GC8-000 | WASHER, SPECIAL, 8MM ····· | 2 | 2 | 2 | 2 | | |

# REAR BRAKE MASTER CYLINDER



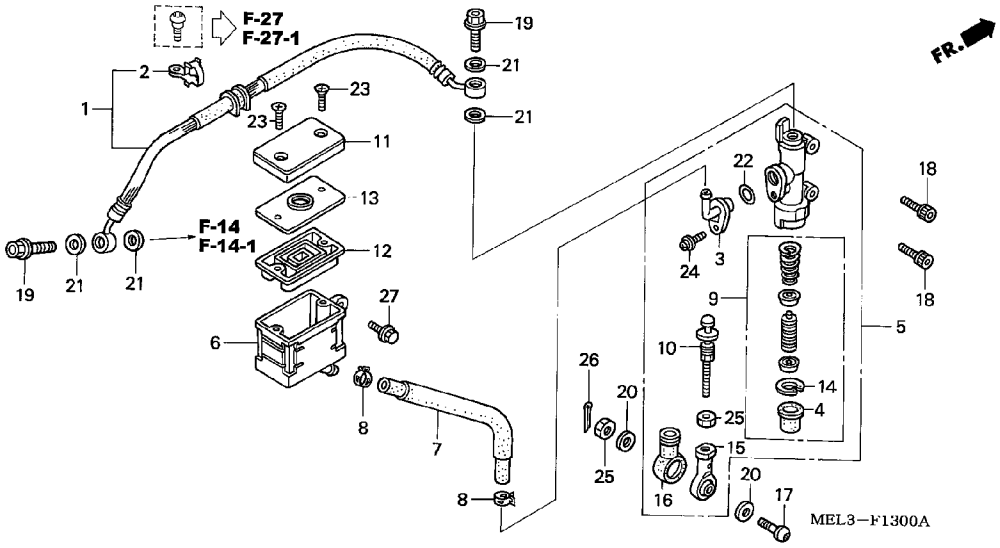


| Ref. No. | Part No. | Description | Reqd. QTY CBR1000RR 4 | 5 | 6 | 7 | Serial No. | Parts catalogue code |
|---|---|---|---|---|---|---|---|---|
| 21 | 90545-300-000 | WASHER, OIL BOLT | 4 | 4 | 4 | 4 | | |
| 22 | 91212-422-006 | O-RING, 14.8X2.4 | 1 | 1 | 1 | 1 | | |
| 23 | 93600-04040-1G | SCREW, FLAT, 4X40 | 2 | 2 | 2 | 2 | | |
| 24 | 93893-04012-17 | SCREW-WASHER, 4X12 | 1 | 1 | 1 | 1 | | |
| 25 | 94002-08000-0S | NUT, HEX., 8MM | 2 | 2 | 2 | 2 | | |
| 26 | 94201-16150 | PIN, SPLIT, 1.6X15 | 1 | 1 | 1 | 1 | | |
| 27 | 96500-06018-00 | BOLT, FLANGE, 6X18 | 1 | 1 | 1 | 1 | | |

# F-14 REAR BRAKE CALIPER (CBR1000RR4/5)

J 9

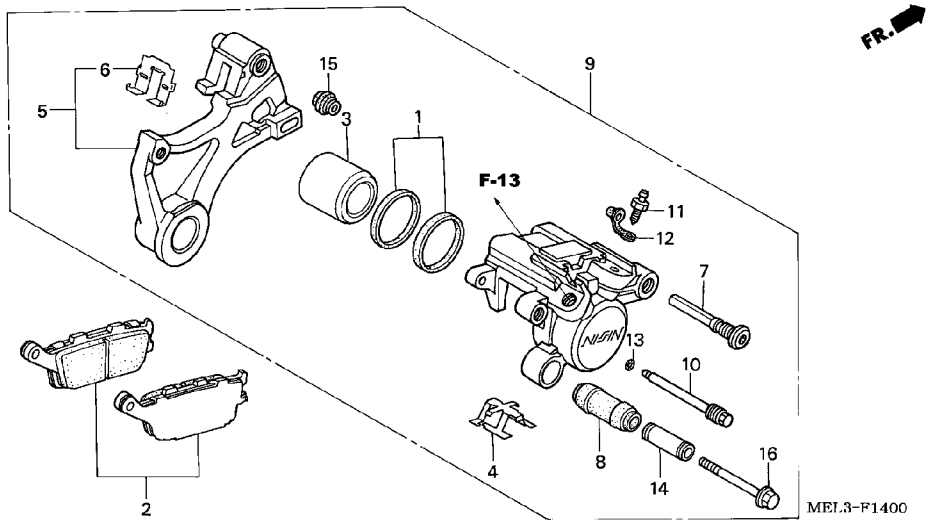


| Ref. No. | L.O.N. | (Relative ref. Number) Description | F.R.T. |
|---|---|---|---|
| 2 | 711140 | SHOE(PAD) SET, BRAKE :REAR --- | 0.1 |
| 3 | | (1) | |
| | 7111D5 | PISTON, REAR BRAKE CALIPER --- | 0.5 |
| | | .INCLUDES: Bleed brakes | |
| 5 | 7111C1 | BRACKET, REAR CALIPER -------- | 0.5 |
| 9 | 711155 | CALIPER, REAR BRAKE --------- | 0.8 |
| | | .INCLUDES: Bleed brakes | |

| Ref. No. | Part No. | Description | Reqd. QTY CBR1000RR 4 | 5 | 6 | 7 | Serial No. | Parts catalogue code |
|---|---|---|---|---|---|---|---|---|
| 1 | 06451-443-405 | SEAL SET, PISTON ---------- | 1 | 1 | - | - | | |
| 2 | 43105-MW0-405 | PAD SET, RR. ---------- | 1 | 1 | - | - | | |
| 3 | 43107-MCJ-006 | PISTON ---------- | 1 | 1 | - | - | | |
| 4 | 43108-MBB-006 | SPRING, PAD ---------- | 1 | 1 | - | - | | |
| 5 | 43110-MEL-006 | BRACKET, RR. BRAKE --------- | 1 | 1 | - | - | | |
| 6 | 43112-MCF-006 | RETAINER, RR. BRACKET ------- | 1 | 1 | - | - | | |
| 7 | 43131-KW3-006 | BOLT, PIN ---------- | 1 | 1 | - | - | | |
| 8 | 43132-KFG-J21 | BOOT, SLEEVE ---------- | 1 | 1 | - | - | | |
| 9 | 43150-MEL-006 | CALIPER SUB ASSY., RR. ------ | 1 | 1 | - | - | | |
| 10 | 43215-KZ4-J41 | PIN, HANGER ---------- | 1 | 1 | - | - | | |
| 11 | 43352-568-003 | SCREW, BLEEDER (NISSIN) ----- | 1 | 1 | - | - | | |
| 12 | 43353-461-771 | CAP, BLEEDER ---------- | 1 | 1 | - | - | | |
| 13 | 45111-MAJ-G41 | RING, STOPPER ---------- | 1 | 1 | - | - | | |
| 14 | 45111-MA3-006 | SLEEVE ---------- | 1 | 1 | - | - | | |
| 15 | 45133-MA3-006 | BOOT B ---------- | 1 | 1 | - | - | | |
| 16 | 90180-MN8-006 | BOLT, FLANGE, 8X49 --------- | 1 | 1 | - | - | | |

# F-14-1 REAR BRAKE CALIPER (CBR1000RR6/7)

J10

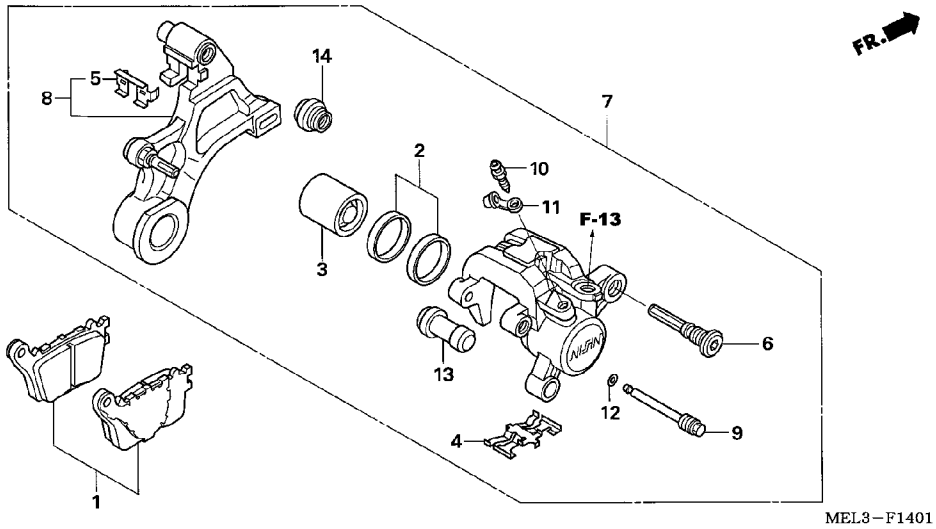


| Ref. No. | L.O.N. | (Relative ref. Number) Description | F.R.T. |
|---|---|---|---|
| 1 | 711140 | SHOE(PAD) SET, BRAKE :REAR --- | 0.1 |
| 3 | | (2) | |
| | 7111D5 | PISTON, REAR BRAKE CALIPER --- | 0.9 |
| | | .INCLUDES: Bleed brakes | |
| 7 | 711155 | CALIPER, REAR BRAKE ---------- | 0.8 |
| | | .INCLUDES: Bleed brakes | |
| 8 | 7111C1 | BRACKET, REAR CALIPER -------- | 0.5 |

| Ref. No. | Part No. | Description | Reqd. QTY CBR1000RR 4 | 5 | 6 | 7 | Serial No. | Parts catalogue code |
|---|---|---|---|---|---|---|---|---|
| 1 | 06435-MEL-D21 | PAD SET, RR. ---------- | - | - | 1 | 1 | | |
| 2 | 06451-166-405 | SEAL SET, PISTON ---------- | - | - | 1 | 1 | | |
| 3 | 43107-MEL-D21 | PISTON ---------- | - | - | 1 | 1 | | |
| 4 | 43108-MEL-D21 | SPRING, PAD ---------- | - | - | 1 | 1 | | |
| 5 | 43112-MEL-D21 | RETAINER ---------- | - | - | 1 | 1 | | |
| 6 | 43131-KW3-006 | BOLT, PIN ---------- | - | - | 1 | 1 | | |
| 7 | 43150-MEL-D21 | CALIPER SUB ASSY., RR. ------ | - | - | 1 | - | | |
| | 43150-MEL-D31 | ---------- | - | - | - | 1 | -------- -------- | BR,E,ED,EK,F,KO,MX,U |
| | 43150-MEL-D41 | ---------- | - | - | - | 1 | -------- -------- | 2ED,2F,3E,4EK |
| 8 | 43190-MEL-D21 | BRACKET SUB ASSY., RR. ------ | - | - | 1 | - | | |
| | 43190-MEL-D31 | ---------- | - | - | - | 1 | | |
| 9 | 43215-KZ4-J41 | PIN, HANGER ---------- | - | - | 1 | 1 | | |
| 10 | 43352-568-003 | SCREW, BLEEDER (NISSIN) ----- | - | - | 1 | 1 | | |
| 11 | 43353-461-771 | CAP, BLEEDER ---------- | - | - | 1 | 1 | | |
| 12 | 45111-MAJ-G41 | RING, STOPPER ---------- | - | - | 1 | 1 | | |
| 13 | 45132-166-016 | BOOT, PIN BUSH (NISSIN) ----- | - | - | 1 | 1 | | |
| 14 | 45133-MA3-006 | BOOT B ---------- | - | - | 1 | 1 | | |

3

# REAR WHEEL



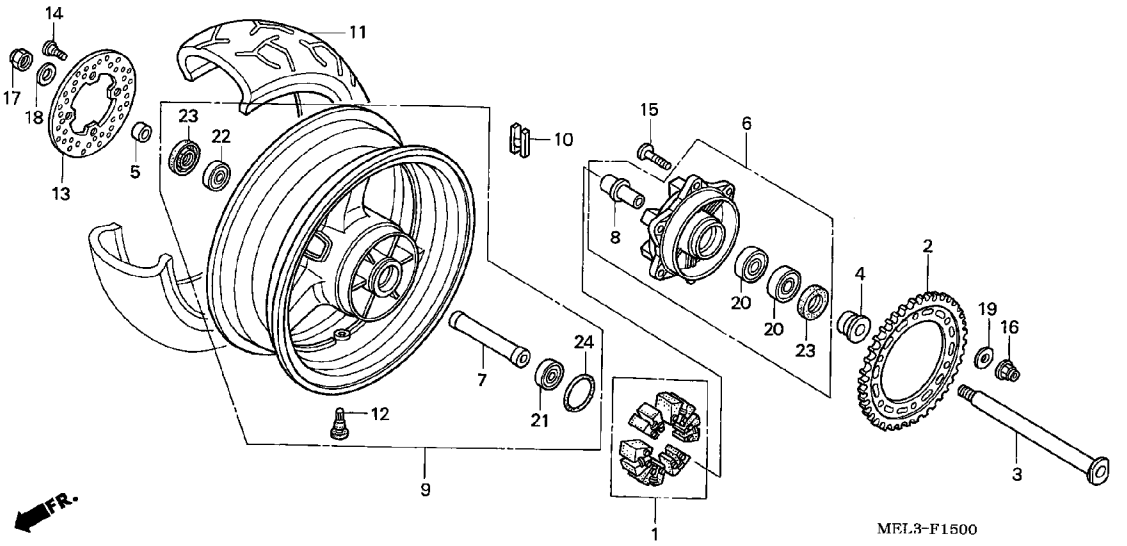


| Ref. No. | L.O.N. | (Relative ref. Number) Description | F.R.T. |
|---|---|---|---|
| 1 | 710157 | DAMPER, REAR WHEEL ---------- | 0.4 |
| 2 | 7101A0 | SPROCKET, FINAL DRIVEN ------- | 0.5 |
| 3 | 710160 | AXLE, REAR WHEEL ---------- | 0.4 |
| 6 | 7101A5 | FLANGE ASSY., FINAL DRIVEN --- | 0.5 |
| 9 | 710118 | REAR WHEEL ---------- | 1.2 |
| | | .INCLUDES: Balance | |
| 10 | 7101E1 | WEIGHT, BALANCE :REAR -------- | 0.7 |
| 11 | 710142 | REAR TIRE(ONE) ---------- | 1.1 |
| | | .INCLUDES: Balance | |
| 13 | 711145 | DISC, REAR BRAKE ---------- | 0.5 |
| 20 | 7101D1 | BEARING, FINAL DRIVEN FLANGE - | 0.6 |
| | | .NOTE: Same time for two units | |
| 21 | | (7,22) | |
| | 710133 | BEARING, REAR WHEEL(ONE) ----- | 0.6 |
| | 710133G | .Replace 1 bearing add ------- | 0.1 |

| Ref. No. | Part No. | Description | Reqd. QTY CBR1000RR 4 | 5 | 6 | 7 | Serial No. | Parts catalogue code |
|---|---|---|---|---|---|---|---|---|
| 1 | 06410-MCF-000 | DAMPER SET, WHEEL ---------- | 1 | 1 | - | - | | |
| | 06410-MEL-D20 | ---------- | - | - | 1 | 1 | | |
| 2 | 41201-MEL-000 | SPROCKET, FINAL DRIVEN (40T) | 1 | 1 | - | - | | |
| | 41201-MEL-D20 | SPROCKET, FINAL DRIVEN (42T) | - | - | 1 | 1 | | |
| 3 | 42301-MEL-000 | AXLE, RR. WHEEL ---------- | 1 | 1 | 1 | 1 | | |
| 4 | 42311-MCJ-750 | COLLAR, RR. WHEEL SIDE ------ | 1 | 1 | 1 | 1 | | |
| 5 | 42312-MEL-000 | COLLAR, RR. BRAKE SIDE ------ | 1 | 1 | 1 | 1 | | |
| 6 | 42615-MEL-000 | FLANGE SUB ASSY., RR. DRIVEN | 1 | 1 | 1 | 1 | | |
| 7 | 42620-MEL-000 | COLLAR, RR. AXLE DISTANCE --- | 1 | 1 | 1 | 1 | | |
| 8 | 42625-MEL-000 | COLLAR B, RR. WHEEL DISTANCE | 1 | 1 | 1 | 1 | | |
| 9 | 42650-MEL-010ZA | WHEEL SUB ASSY., RR. | | | | | | |
| | | *NH1*.....BLACK | 1 | - | - | - | | |
| | | | - | 1 | - | - | -------- -------- | BR,E,ED,EK,F,G,KO,MX,U |
| | 42650-MEL-D10ZA | *YR250*.....VIBRANT ORANGE | - | 1 | - | - | -------- -------- | 2ED,2F,2G,2KO,2U,3E,4EK |
| | 42650-MEL-D20ZB | WHEEL SUB ASSY., RR. *TYPE1* | - | - | 1 | - | -------- -------- | MX,U |
| | 42650-MEL-D20ZC | WHEEL SUB ASSY., RR. *TYPE2* | - | - | 1 | 1 | -------- -------- | BR,E,ED,EK,F,KO |
| | | | - | - | - | 1 | -------- -------- | MX,U |
| | 42650-MEL-D40 | WHEEL SUB ASSY., RR. -------- | - | - | - | 1 | -------- -------- | 2ED,2F,3E,4EK |
| 10 | 42704-MER-D00 | WEIGHT, BALANCE (10G) ------- | N | N | N | N | | |
| | 42705-MER-D00 | WEIGHT, BALANCE (20G) ------- | N | N | N | N | | |
| | 42706-MER-D00 | WEIGHT, BALANCE (30G) ------- | N | N | N | N | | |
| 11 | 42711-MEL-008 | TIRE, RR. (PIRELLI) (190/50ZR17 M/C 73W) | 1 | 1 | 1 | 1 | | |

# REAR WHEEL



| Ref. No. | Part No. | Description | Reqd. QTY CBR1000RR 4 | 5 | 6 | 7 | Serial No. | Parts catalogue code |
|---|---|---|---|---|---|---|---|---|
| 11) | 42711-MEL-013 | TIRE, RR. (BRIDGESTONE) (190/50ZR17 M/C 73W) | 1 | - | - | - | -------- -------- | BR,F,MX |
| | | | 1 | - | - | - | 4M000378 -------- | U |
| | | | 1 | - | - | - | 4M002849 -------- | G |
| | | | 1 | - | - | - | 4M006411 -------- | E,ED |
| | | | - | 1 | - | - | | |
| | 42711-MEL-D21 | ..... | - | - | 1 | 1 | | |
| 12 | 42753-MCF-008 | VALVE, RIM (PIRELLI) ..... | 1 | 1 | 1 | 1 | | |
| | 42753-ML7-003 | VALVE, RIM (BRIDGESTONE) .... | 1 | - | - | - | -------- -------- | BR,F,MX |
| | | | 1 | - | - | - | 4M000378 -------- | U |
| | | | 1 | - | - | - | 4M002849 -------- | G |
| | | | 1 | - | - | - | 4M006411 -------- | E,ED |
| | | | - | 1 | 1 | 1 | | |
| 13 | 43251-MEE-000 | DISK, RR. BRAKE ..... | 1 | 1 | 1 | 1 | | |
| 14 | 90105-MBB-000 | BOLT, BRAKE DISK, 8X24 ..... | 4 | 4 | 4 | 4 | | |
| 15 | 90121-MCF-D30 | BOLT, 10X30 ..... | 6 | 6 | 6 | 6 | | |
| 16 | 90304-KAE-871 | NUT, U, 10MM ..... | 6 | 6 | 6 | 6 | | |
| 17 | 90305-MCF-D00 | NUT, U, 22MM ..... | 1 | 1 | 1 | 1 | | |
| 18 | 90401-MCJ-000 | WASHER, 23X37X2.5 ..... | 1 | 1 | 1 | 1 | | |
| 19 | 90502-MCF-000 | WASHER, 10MM ..... | 6 | 6 | 6 | 6 | | |
| 20 | 91051-HA7-671 | BEARING, RADIAL BALL, 28X52X12 | 2 | 2 | 2 | 2 | | |
| 21 | 91052-MCF-003 | BEARING, RADIAL BALL, 6005 .. | 1 | 1 | 1 | 1 | | |
| 22 | 91053-MAZ-003 | BEARING, RADIAL BALL, (6205X2) | 1 | 1 | 1 | 1 | | |
| 23 | 91254-MEE-003 | DUST SEAL, 35X52X7.5 ..... | 2 | 2 | 2 | 2 | | |
| 24 | 91352-MCF-003 | O-RING, 51X2 ..... | 1 | 1 | 1 | 1 | | |

# TOP SHELTER



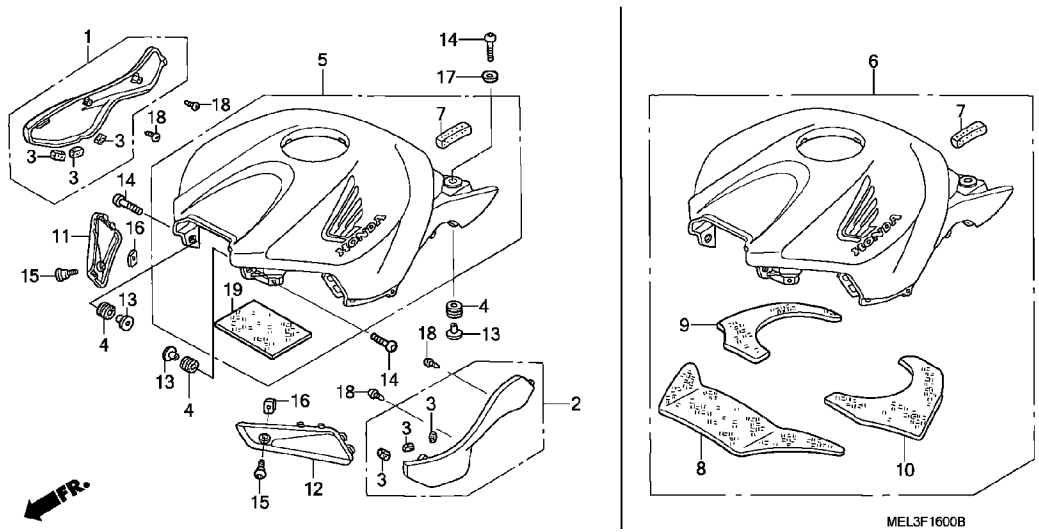


| Ref. No. | L.O.N. | (Relative ref. Number) Description | F.R.T. |
|---|---|---|---|
| 1 | 4131M1 | PAD, FLAME BODY :RIGHT ------- | 0.2 |
| | 4131Z6 | PAD, FLAME BODY :BOTH -------- | 0.2 |
| 2 | 4131M0 | PAD, FLAME BODY :LEFT -------- | 0.2 |
| | 4131Z6 | PAD, FLAME BODY :BOTH -------- | 0.2 |
| 5 | | (6) | |
| | 4131H5 | SHELTER, TOP ---------- | 0.2 |
| 11 | 4131M2 | COVER, FRONT SIDE :RIGHT ----- | 0.1 |
| | 4131V6 | COVER, FRONT SIDE :BOTH ------ | 0.1 |
| 12 | 4131M3 | COVER, FRONT SIDE :LEFT ------ | 0.1 |
| | 4131V6 | COVER, FRONT SIDE :BOTH ------ | 0.1 |

3

| Ref. No. | Part No. | Description | Reqd. QTY CBR1000RR 4 | 5 | 6 | 7 | Serial No. | | Parts catalogue code |
|---|---|---|---|---|---|---|---|---|---|
| 1 | 50951-MEL-000 | PAD, R. FRAME BODY ---------- | 1 | 1 | 1 | 1 | | | |
| 2 | 50952-MEL-000 | PAD, L. FRAME BODY ---------- | 1 | 1 | 1 | 1 | | | |
| 3 | 50953-MEL-300 | RUBBER, FRAME PAD CUSHION --- | 6 | 6 | 6 | 6 | | | |
| 4 | 80101-165-000 | RUBBER, RR. FENDER CUSHION -- | 4 | 4 | 4 | 4 | | | |
| 5 | 83150-MEL-010ZG | SHELTER SET, TOP *TYPE1 1* (WL) | 1 | - | - | - | -------- | -------- | E,ED,F,G,KO,MX,U |
| | 83150-MEL-010ZH | SHELTER SET, TOP *TYPE4 1* (WL) | 1 | - | - | - | -------- | -------- | BR,MX |
| | 83150-MEL-010ZJ | SHELTER SET, TOP *TYPE5 1* (WL) | 1 | - | - | - | -------- | -------- | BR,MX |
| | 83150-MEL-010ZK | SHELTER SET, TOP *TYPE2 1* (WL) | 1 | - | - | - | -------- | -------- | E,ED,F,G,KO,U |
| | 83150-MEL-010ZL | SHELTER SET, TOP *TYPE3 1* (WL) | 1 | - | - | - | -------- | -------- | E,ED,F,G,KO,U |
| | 83150-MEL-D00ZB | SHELTER SET, TOP *TYPE2*(WL) | - | 1 | - | - | -------- | -------- | E,ED,EK,F,G,KO |
| | 83150-MEL-D00ZC | SHELTER SET, TOP *TYPE3*(WL) | - | 1 | - | - | -------- | -------- | E,ED,EK,F,G |
| | 83150-MEL-D00ZD | SHELTER SET, TOP *TYPE1 1* (WL) | - | 1 | - | - | -------- | -------- | E,ED,EK,F,G,KO |
| | 83150-MEL-U00ZA | SHELTER SET, TOP *TYPE1*(WL) | - | 1 | - | - | -------- | -------- | U |
| | 83150-MEL-U00ZB | SHELTER SET, TOP *TYPE2*(WL) | - | 1 | - | - | -------- | -------- | U |
| | 83150-MEL-U00ZC | SHELTER SET, TOP *TYPE3*(WL) | - | 1 | - | - | -------- | -------- | U |
| | 83150-MEL-D11ZA | SHELTER SET, TOP *TYPE1*(WL) | - | 1 | - | - | -------- | -------- | 2ED,2F,2G,2KO,2U,3E,4EK |
| | 83150-MEL-D20ZA | ---------- | - | - | 1 | - | -------- | -------- | E,ED,EK,F,KO,MX,U |
| | 83150-MEL-D20ZD | SHELTER SET, TOP *TYPE2 1* (WL) | - | - | 1 | - | | | |
| | | | - | - | - | 1 | -------- | -------- | BR,E,ED,EK,F,KO |
| | 83150-MEL-D20ZE | SHELTER SET, TOP *TYPE3 1* (WL) | - | - | 1 | - | -------- | -------- | BR,E,ED,EK,F,MX,U |
| | 83150-MEL-D20ZF | SHELTER SET, TOP *TYPE4*(WL) | - | - | 1 | - | -------- | -------- | MX,U |

# F-16 TOP SHELTER

J14

| Ref. No. | Part No. | Description | Reqd. QTY CBR1000RR 4 | 5 | 6 | 7 | Serial No. | | Parts catalogue code |
|---|---|---|---|---|---|---|---|---|---|
| (5) | 83150-MEL-D30ZA | SHELTER SET, TOP *TYPE1*(WL) | - | - | - | 1 | -------- | -------- | BR,E,ED,EK,F,KO |
| | 83150-MEL-D40ZA | ..... | - | - | - | 1 | -------- | -------- | 2ED,2F,3E,4EK |
| 6 | 83150-MEL-A00ZA | SHELTER SET, TOP *TYPE1*(WL) | - | 1 | - | - | -------- | -------- | BR,MX |
| | 83150-MEL-A00ZB | SHELTER SET, TOP *TYPE2*(WL) | - | 1 | - | - | -------- | -------- | BR,MX |
| | 83150-MEL-A00ZC | SHELTER SET, TOP *TYPE3*(WL) | - | 1 | - | - | -------- | -------- | BR,MX |
| | 83150-MEL-A20ZB | ..... | - | - | - | 1 | -------- | -------- | MX,U |
| | 83150-MEL-A30ZA | SHELTER SET, TOP *TYPE1*(WL) | - | - | - | 1 | -------- | -------- | MX,U |
| | 83150-MEL-A30ZC | SHELTER SET, TOP *TYPE3*(WL) | - | - | - | 1 | -------- | -------- | MX,U |
| 7 | 83156-MEL-300 | MAT, TOP SHELTER ..... | 1 | 1 | 1 | 1 | | | |
| 8 | 83157-MEL-A00 | MAT, FR. TOP SHELTER ..... | - | 1 | - | 1 | -------- | -------- | MX |
| | | | - | 1 | - | - | -------- | -------- | BR |
| | | | - | - | - | 1 | -------- | -------- | U |
| 9 | 83158-MEL-A00 | MAT, R. RR. TOP SHELTER ..... | - | 1 | - | 1 | -------- | -------- | MX |
| | | | - | 1 | - | - | -------- | -------- | BR |
| | | | - | - | - | 1 | -------- | -------- | U |
| 10 | 83159-MEL-A00 | MAT, L. RR. TOP SHELTER ..... | - | 1 | - | 1 | -------- | -------- | MX |
| | | | - | 1 | - | - | -------- | -------- | BR |
| | | | - | - | - | 1 | -------- | -------- | U |
| 11 | 83165-MEL-000 | COVER, R. FR. SIDE ..... | 1 | 1 | 1 | 1 | | | |
| 12 | 83166-MEL-000 | COVER, L. FR. SIDE ..... | 1 | 1 | 1 | 1 | | | |
| 13 | 84706-163-670 | COLLAR, TAILLIGHT MOUNTING .. | 4 | 4 | 4 | 4 | | | |
| 14 | 90085-MAJ-A20 | BOLT, SPECIAL, 6X22 ..... | 4 | 4 | 4 | 4 | | | |
| 15 | 90106-MBY-000 | SCREW, SPECIAL, 5X12 ..... | 2 | 2 | 2 | 2 | | | |
| 16 | 90312-MT3-000 | NUT, CLIP, 5MM ..... | 2 | 2 | 2 | 2 | | | |
| 17 | 90525-428-900 | WASHER, PLAIN, 6MM ..... | 2 | 2 | 2 | 2 | | | |
| 18 | 93903-24180 | SCREW, TAPPING, 4X8 ..... | 4 | 4 | 4 | 4 | | | |
| 19 | 64250-MCA-J40 | MAT, FR. SPEAKER BOX ..... | - | - | 1 | - | | | |
| | | | - | - | - | 1 | -------- | -------- | BR,E,ED,EK,F,KO,2ED,2F,3E,4EK |

3

# FUEL TANK/FUEL PUMP



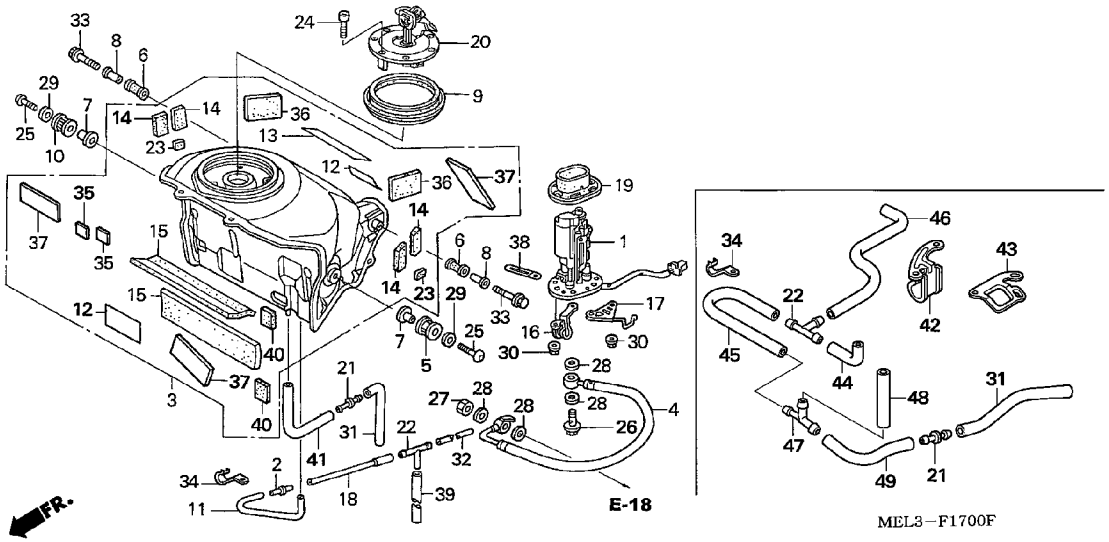


| Ref. No. | L.O.N. | (Relative ref. Number) Description | F.R.T. |
|---|---|---|---|
| 1 | | (19) | |
| | 310120 | PUMP ASSY., FUEL ····· | 0.5 |
| 3 | 310100 | TANK, FUEL ····· | 0.6 |
| 4 | 3101C2 | HOSE, FUEL FEED :PRIMARY ····· | 0.4 |
| 9 | 3101C4 | SEAL, FUEL TANK ····· | 0.3 |
| 20 | 3101C1 | LOCKING FUEL TANK CAP ····· | 0.1 |

| Ref. No. | Part No. | Description | Reqd. QTY CBR1000RR 4 | 5 | 6 | 7 | Serial No. | | Parts catalogue code |
|---|---|---|---|---|---|---|---|---|---|
| 1 | 16700-MEL-003 | PUMP ASSY., FUEL ····· | 1 | - | - | - | -------- | 4M002776 | G |
| | 16700-MEL-013 | ····· | 1 | - | - | - | -------- | -------- | BR,E,ED,F,KO,MX,U |
| | | | 1 | - | - | - | 4M002777 | -------- | G |
| | | | - | 1 | - | - | | | |
| | 16700-MEL-D20 | ····· | - | - | 1 | - | -------- | 6M200041 | KO |
| | | | - | - | 1 | - | -------- | 6M200375 | BR,MX |
| | | | - | - | 1 | - | -------- | 6M200450 | U |
| | | | - | - | 1 | - | -------- | 6M201334 | F |
| | | | - | - | 1 | - | -------- | 6M213364 | E,ED,EK |
| | 16700-MEL-D21 | PUMP UNIT, FUEL ····· | - | - | 1 | - | 6M200042 | -------- | KO |
| | | | - | - | 1 | - | 6M200376 | -------- | BR,MX |
| | | | - | - | 1 | - | 6M200451 | -------- | U |
| | | | - | - | 1 | - | 6M201335 | -------- | F |
| | | | - | - | 1 | - | 6M213365 | -------- | E,ED,EK |
| | | | - | - | - | 1 | | | |
| 2 | 17414-PC6-660 | JOINT, TWO WAY (3.5) ····· | 1 | 1 | - | - | | | |
| 3 | 17520-MEL-020 | TANK SET, FUEL ····· | 1 | - | - | - | -------- | 4M000062 | BR,KO,MX |
| | | | 1 | - | - | - | -------- | 4M000377 | U |
| | | | 1 | - | - | - | -------- | 4M001346 | F |
| | | | 1 | - | - | - | -------- | 4M002931 | G |
| | | | 1 | - | - | - | -------- | 4M006749 | E,ED |
| | 17520-MEL-030 | ····· | 1 | - | - | - | 4M000063 | -------- | BR,KO,MX |
| | | | 1 | - | - | - | 4M000378 | -------- | U |
| | | | 1 | - | - | - | 4M001347 | -------- | F |
| | | | 1 | - | - | - | 4M002932 | -------- | G |
| | | | 1 | - | - | - | 4M006750 | -------- | E,ED |
| | 17520-MEL-D00 | ····· | - | 1 | - | - | | | |
| | 17520-MEL-D20 | ····· | - | - | 1 | 1 | | | |
| 4 | 17526-MEL-004 | HOSE COMP. A, FUEL FEED ····· | 1 | - | - | - | -------- | -------- | KO |

# FUEL TANK/FUEL PUMP



| Ref. No. | Part No. | Description | Reqd. QTY CBR1000RR 4 | 5 | 6 | 7 | Serial No. | Parts catalogue code |
|---|---|---|---|---|---|---|---|---|
| (4) | 17526-MEL-014 | HOSE COMP. A, FUEL FEED ····· | 1 | - | - | - | -------- -------- | BR,E,ED,F,G,MX,U |
| | | | - | 1 | - | - | | |
| | 17526-MEL-D20 | ····· | - | - | 1 | 1 | | |
| 5 | 17533-MEL-000 | RUBBER, L. FR. TANK MOUNTING | 1 | 1 | 1 | 1 | | |
| 6 | 17534-MEE-000 | RUBBER, RR. TANK MOUNTING ··· | 2 | 2 | 2 | 2 | | |
| 7 | 17535-MEL-010 | COLLAR, FR. TANK SETTING ···· | 2 | 2 | - | - | | |
| | 17535-MEL-D20 | ····· | - | - | 2 | 2 | | |
| 8 | 17538-MEE-000 | COLLAR, RR. TANK SETTING ···· | 2 | 2 | - | - | | |
| | 17538-MEE-D00 | ····· | - | - | 2 | 2 | | |
| 9 | 17543-MEE-000 | SEAL, FUEL TANK ····· | 1 | 1 | 1 | 1 | | |
| 10 | 17545-MEL-000 | RUBBER, R. FR. TANK MOUNTING | 1 | 1 | 1 | 1 | | |
| 11 | 17555-MEL-000 | TUBE A, FUEL TANK BREATHER ·· | 1 | 1 | - | - | | |
| 12 | 17556-MEL-300 | FILM A, PROTECTOR ····· | 1 | - | - | - | -------- 4M000062 | BR,KO,MX |
| | | | 1 | - | - | - | -------- 4M000377 | U |
| | | | 1 | - | - | - | -------- 4M001346 | F |
| | | | 1 | - | - | - | -------- 4M002931 | G |
| | | | 1 | - | - | - | -------- 4M006749 | E,ED |
| | | | 2 | - | - | - | 4M000063 -------- | BR,KO,MX |
| | | | 2 | - | - | - | 4M000378 -------- | U |
| | | | 2 | - | - | - | 4M001347 -------- | F |
| | | | 2 | - | - | - | 4M002932 -------- | G |
| | | | 2 | - | - | - | 4M006750 -------- | E,ED |
| | | | - | 1 | - | - | -------- -------- | BR,KO,MX,U,2KO,2U |
| | | | - | 1 | - | - | 5M100101 -------- | G,2G |
| | | | - | 1 | - | - | 5M100221 -------- | F,2F |
| | | | - | 1 | - | - | 5M102571 -------- | E,ED,EK,2ED,3E,4EK |
| | | | - | - | 1 | 1 | | |
| 13 | 17557-MEL-300 | FILM B, PROTECTOR ····· | 1 | 1 | 1 | 1 | | |
| 14 | 17601-MEL-300 | CUSHION B, FUEL TANK ····· | 4 | 4 | 4 | 4 | | |
| 15 | 17559-MEL-310 | MAT, FUEL TANK ····· | 2 | - | - | - | | |
| | 17559-MEL-D00 | ····· | - | 2 | 2 | 2 | | |
| 16 | 17561-MEL-000 | GUIDE, FUEL BREATHER TUBE ··· | 1 | 1 | - | - | | |
| 17 | 17562-MEL-000 | GUIDE, FUEL FEED HOSE ····· | 1 | - | - | - | -------- -------- | KO |
| | 17562-MEL-010 | ····· | 1 | - | - | - | -------- -------- | BR,E,ED,F,G,MX,U |
| | 17562-MEL-D00 | ····· | - | 1 | - | - | | |
| 18 | 17565-MEL-000 | TUBE B, FUEL TANK BREATHER ·· | 1 | - | - | - | | |
| | 17565-MEL-D00 | ····· | - | 1 | - | - | | |
| 19 | 17574-MEE-000 | PACKING, BASE ····· | 1 | 1 | 1 | 1 | | |
| 20 | 17620-MCJ-751 | CAP COMP., FUEL FILLER ····· | 1 | 1 | 1 | 1 | | |
| 21 | 19102-KT8-000 | JOINT, TUBE ····· | 1 | 1 | 1 | 1 | | |
| 22 | 19103-ML7-000 | JOINT, TUBE ····· | 1 | - | - | - | -------- -------- | BR,F,G,KO,MX,U |
| | 36191-KV3-700 | JOINT, AIR FILTER ····· | 1 | - | - | - | -------- -------- | E,ED |
| | | | - | 1 | 1 | 1 | | |
| 23 | 81214-MT3-300 | RUBBER, PROTECTOR ····· | 2 | 2 | 2 | 2 | | |
| 24 | 90074-MT4-000 | BOLT, SOCKET, 4X21 ····· | 3 | 3 | 3 | 3 | | |
| 25 | 90128-KL4-000 | BOLT, SPROCKET FIXING ····· | 2 | 2 | 2 | 2 | | |
| 26 | 90136-MEL-000 | BOLT, BANJO, 12MM ····· | 1 | 1 | 1 | 1 | | |
| 27 | 90201-PD1-000 | NUT A, SEALING, 12MM ····· | 1 | 1 | 1 | 1 | | |
| 28 | 90428-PD6-003 | WASHER, SEALING, 12MM ····· | 4 | 4 | 4 | 4 | | |
| 29 | 90524-030-000 | WASHER A, HANDLE HOLDER SETTING | 2 | 2 | 2 | 2 | | |
| 30 | 94050-06080 | NUT, FLANGE, 6MM ····· | 6 | 6 | 6 | 6 | | |

# FUEL TANK/FUEL PUMP



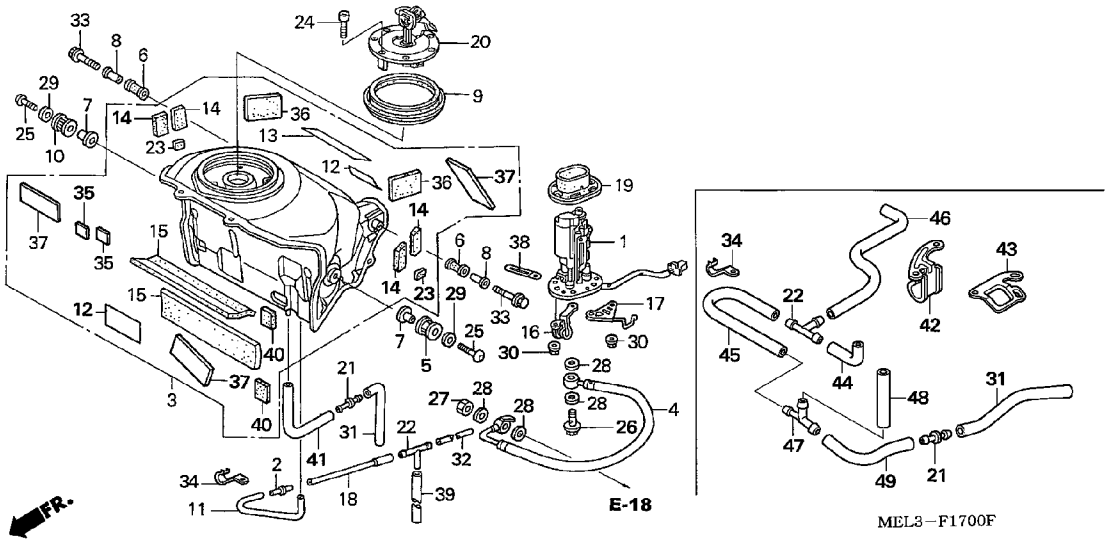


| Ref. No. | Part No. | Description | Reqd. QTY CBR1000RR 4 | 5 | 6 | 7 | Serial No. | | Parts catalogue code |
|---|---|---|---|---|---|---|---|---|---|
| 31 | 95005-80400-20 | TUBE, 8X400(95005-80001-20M) | 1 | - | - | - | -------- | -------- | F,G |
| | | | 1 | - | - | - | -------- | 4M000291 | BR,KO,MX |
| | | | 1 | - | - | - | -------- | 4M000847 | U |
| | | | 1 | - | - | - | -------- | 4M010931 | E,ED |
| | 95005-80340-20 | TUBE, 8X340(95005-80001-20M) | 1 | - | - | - | 4M000292 | -------- | BR,KO,MX |
| | | | 1 | - | - | - | 4M000848 | -------- | U |
| | | | 1 | - | - | - | 4M010932 | -------- | E,ED |
| | | | - | 1 | 1 | 1 | | | |
| 32 | 95005-80440-20 | TUBE, 8X440(95005-80001-20M) | 1 | - | - | - | | | |
| | 95005-45450-20 | TUBE, 4.5X450(95005-45001-20M) | - | 1 | - | - | | | |
| 33 | 95801-06035-00 | BOLT, FLANGE, 6X35 ---------- | 2 | 2 | 2 | 2 | | | |
| 34 | 16106-KW7-900 | CLIP B, TUBE ---------- | 1 | 1 | 1 | 1 | | | |
| 35 | 17528-MR4-900 | TAPE, TANK GUARD ---------- | 2 | 2 | 2 | 2 | | | |
| 36 | 17554-MEL-300 | CUSHION, FUEL TANK ---------- | 2 | 2 | 2 | 2 | | | |
| 37 | 81229-MR5-000 | TAPE, PROTECTOR ---------- | 1 | - | 2 | 2 | | | |
| | | | - | 2 | - | - | -------- | -------- | 2KO |
| | | | - | 3 | - | - | -------- | -------- | BR,E,ED,EK,F,G,KO,MX,U,2ED,2F,2G,2U,3E,4EK |
| 38 | 91410-679-000 | CLIP, 2X60 ---------- | 1 | 1 | 1 | 1 | | | |
| 39 | 17575-MEL-000 | TUBE C, FUEL TANK BREATHER -- | 1 | - | - | - | -------- | -------- | E,ED |
| | | | - | 1 | - | - | | | |
| 40 | 17528-KCZ-930 | TAPE B, TANK GUARD ---------- | 2 | 2 | 2 | 2 | | | |
| 41 | 95005-80240-50 | TUBE, 8X240(95005-80001-50M) | 1 | - | - | - | -------- | -------- | BR,F,G,KO,MX,U |
| | 95005-80400-20 | TUBE, 8X400(95005-80001-20M) | 1 | - | - | - | -------- | -------- | E,ED |
| | 95005-80170-50 | TUBE, 8X170(95005-80001-50M) | - | 1 | - | - | | | |
| 42 | 16723-MEL-D20 | GUIDE, FUEL BREATHER TUBE --- | - | - | 1 | 1 | | | |
| 43 | 16724-MEL-D20 | GUIDE, FUEL BREATHER TUBE (B) | - | - | 1 | 1 | | | |
| 44 | 17555-MEL-D20 | TUBE A, FUEL TANK BREATHER -- | - | - | 1 | 1 | | | |

# FUEL TANK/FUEL PUMP



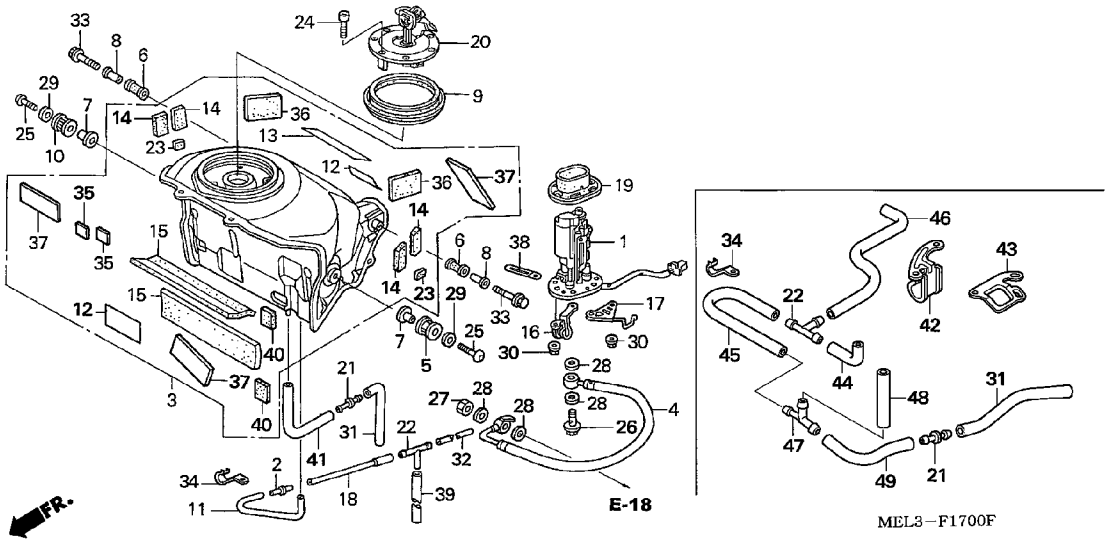


| Ref. No. | Part No. | Description | Reqd. QTY CBR1000RR 4 | 5 | 6 | 7 | Serial No. | Parts catalogue code |
|---|---|---|---|---|---|---|---|---|
| 45 | 17556-MEL-D20 | TUBE B, FUEL TANK BREATHER ·· | - | - | 1 | 1 | | |
| 46 | 17557-MEL-D20 | TUBE C, FUEL TANK BREATHER ·· | - | - | 1 | 1 | | |
| 47 | 17559-MEL-D20 | JOINT, THREE WAY ····· | - | - | 1 | 1 | | |
| 48 | 95005-80040-50 | TUBE, 8X40(95005-80001-50M) · | - | - | 1 | 1 | | |
| 49 | 95005-80110-50 | TUBE, 8X110(95005-80001-50M) | - | - | 1 | 1 | | |

# SEAT



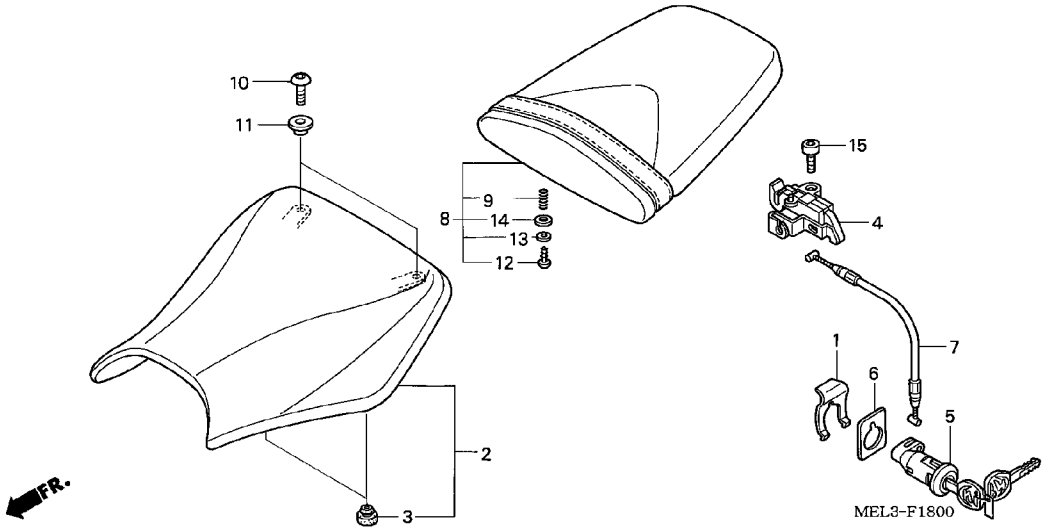


| Ref. No. | L.O.N. | (Relative ref. Number) Description | F.R.T. |
|---|---|---|---|
| 2 | 413150 | SEAT | 0.1 |
| 4 | 4131E8 | CATCH, SEAT :REAR SIDE | 0.2 |
| 5 | 4131F2 | KEY, SEAT LOCK | 0.3 |
| | 4131F2C | .'06 model add | 0.1 |
| | 4131F2E | .'07 model add | 0.1 |
| 7 | 811175 | CABLE, SEAT LOCK | 0.3 |
| | 811175B | .'06 model add | 0.1 |
| | 811175D | .'07 model add | 0.1 |

| Ref. No. | Part No. | Description | Reqd. QTY CBR1000RR 4 | 5 | 6 | 7 | Serial No. | Parts catalogue code |
|---|---|---|---|---|---|---|---|---|
| 1 | 75581-GN8-920 | SPRING, LOCK KEY SETTING | 1 | 1 | 1 | 1 | | |
| 2 | 77100-MEL-000 | SEAT ASSY., SINGLE | 1 | - | - | - | -------- 4M001009 | E,ED |
| | 77100-MEL-010 | | 1 | - | - | - | -------- -------- | BR,F,G,KO,MX,U |
| | | | 1 | - | - | - | 4M001010 -------- | E,ED |
| | | | - | 1 | - | - | | |
| | 77100-MEL-D20 | | - | - | 1 | 1 | | |
| 3 | 77207-MEL-000 | RUBBER, SEAT CUSHION | 4 | 4 | 4 | 4 | | |
| 4 | 77220-MEL-000 | HOOK, SEAT CATCH | 1 | 1 | - | - | | |
| | 77220-MEL-D20 | | - | - | 1 | 1 | | |
| 5 | 77234-MBL-611 | KEY, SEAT LOCK | 1 | 1 | 1 | 1 | | |
| 6 | 77236-GW0-000 | WASHER, SEAT LOCK | 1 | 1 | - | - | | |
| 7 | 77240-MEL-000 | CABLE, SEAT LOCK | 1 | 1 | 1 | 1 | | |
| 8 | 77300-MEL-000 | SEAT ASSY., PILLION | 1 | - | - | - | -------- -------- | BR,F,G,KO,MX,U |
| | 77300-MEL-010 | | 1 | - | - | - | -------- -------- | E,ED |
| | | | - | 1 | - | - | | |
| | 77300-MEL-D20 | | - | - | 1 | - | | |
| | 77300-MEL-D30 | | - | - | - | 1 | | |
| 9 | 77302-MEE-000 | SPRING, SEAT LOCK | 1 | 1 | 1 | 1 | | |
| 10 | 90118-MR1-000 | SCREW, PAN, 6X14 | 2 | 2 | 2 | 2 | | |
| 11 | 90522-170-700 | COLLAR, GEARSHIFT LEVER SETTING | 2 | 2 | 2 | 2 | | |
| 12 | 93903-24320 | SCREW, TAPPING, 4X12 | 1 | 1 | 1 | 1 | | |
| 13 | 94101-04800 | WASHER, PLAIN, 4MM | 1 | 1 | 1 | 1 | | |
| 14 | 94102-08800 | WASHER, PLAIN, 8MM | 1 | 1 | 1 | 1 | | |
| 15 | 96600-06012-00 | BOLT, SOCKET, 6X12 | 1 | 1 | 1 | 1 | | |

# F-19 SEAT COWL (CBR1000RR4/5)

K 4

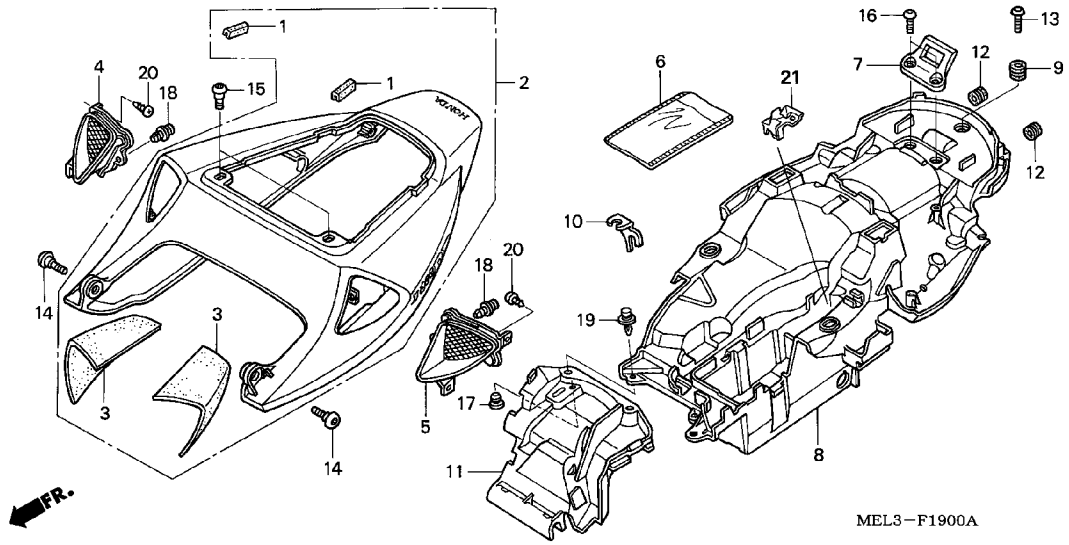


| Ref. No. | L.O.N. | (Relative ref. Number) Description | F.R.T. |
|---|---|---|---|
| 2 | 411135 | COWL, REAR | 0.3 |
| 4 | 4111G2 | DUCT, SEAT COWL :RIGHT | 0.2 |
| | 4111T0 | DUCT, SEAT COWL :BOTH | 0.2 |
| 5 | 4111G3 | DUCT, SEAT COWL :LEFT | 0.2 |
| | 4111T0 | DUCT, SEAT COWL :BOTH | 0.2 |
| 8 | 413110 | FENDER B, REAR | 0.9 |
| 11 | 4131M4 | PROTECTOR, HEAT | 2.2 |

| Ref. No. | Part No. | Description | Reqd. QTY CBR1000RR 4 | 5 | 6 | 7 | Serial No. | Parts catalogue code |
|---|---|---|---|---|---|---|---|---|
| 1 | 64121-MEL-000 | RUBBER, PROTECTOR | 2 | 2 | - | - | | |
| 2 | 77210-MEL-010ZE | COWL SET, RR. SEAT *TYPE1 1*(WL) | 1 | - | - | - | | E,ED,F,G,KO,MX,U |
| | 77210-MEL-010ZF | COWL SET, RR. SEAT *TYPE2 1*(WL) | 1 | - | - | - | | |
| | 77210-MEL-010ZG | COWL SET, RR. SEAT *TYPE4 1*(WL) | 1 | - | - | - | | BR,MX |
| | 77210-MEL-010ZH | COWL SET, RR. SEAT *TYPE3 1*(WL) | 1 | - | - | - | | E,ED,F,G,KO,U |
| | 77210-MEL-D00ZA | COWL SET, RR. SEAT *TYPE1*(WL) | - | 1 | - | - | | BR,E,ED,EK,F,G,KO,MX,U |
| | 77210-MEL-D00ZB | COWL SET, RR. SEAT *TYPE2*(WL) | - | 1 | - | - | | BR,E,ED,EK,F,G,KO,MX,U |
| | 77210-MEL-D00ZC | COWL SET, RR. SEAT *TYPE4*(WL) | - | 1 | - | - | | BR,MX,U |
| | 77210-MEL-D00ZD | COWL SET, RR. SEAT *TYPE3*(WL) | - | 1 | - | - | | E,ED,EK,F,G |
| | 77210-MEL-D10ZA | COWL SET, RR. SEAT *TYPE1*(WL) | - | 1 | - | - | | 2ED,2F,2G,2KO,2U,3E,4EK |
| 3 | 77221-MEL-300 | SEAL, RR. SEAT COWL | 2 | 2 | - | - | | |
| 4 | 77223-MEL-000 | DUCT COMP., R. SEAT COWL | 1 | - | - | - | | |
| | 77223-MEL-D00 | | - | 1 | - | - | | |
| 5 | 77224-MEL-000 | DUCT COMP., L. SEAT COWL | 1 | - | - | - | | |
| | 77224-MEL-D00 | | - | 1 | - | - | | |
| 6 | 77251-GR1-000 | BAG, SERVICE BOOK | 1 | 1 | - | - | | |
| 7 | 77310-MEE-940 | BRACKET, SEAT HOOK | 1 | 1 | - | - | | |
| 8 | 80105-MEL-020 | FENDER COMP. B, RR. | 1 | 1 | - | - | | |
| 9 | 80107-GE0-710 | RUBBER, RR. FENDER SETTING | 1 | 1 | - | - | | |
| 10 | 80107-MEL-000 | STAY, FR. LOCK CABLE | 1 | 1 | - | - | | |
| 11 | 80110-MEL-000 | PROTECTOR, HEAT | 1 | 1 | - | - | | |
| 12 | 83501-MG7-000 | GROMMET, SIDE COVER | 2 | 2 | - | - | | |
| 13 | 90085-KFB-000 | BOLT, SPECIAL, 6X22 | 1 | 1 | - | - | | |

3

# F-19 SEAT COWL (CBR1000RR4/5)

K 5

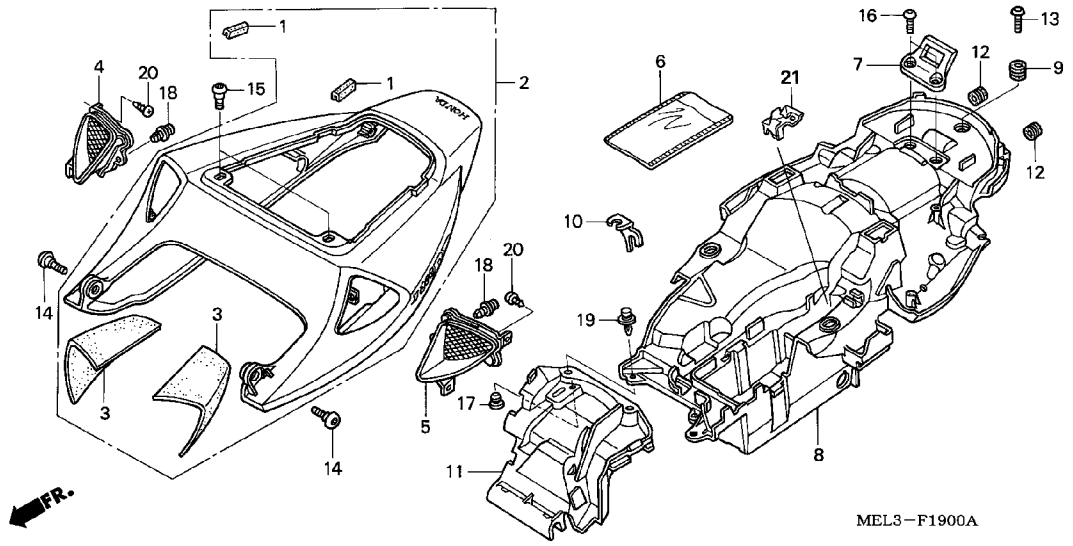


| Ref. No. | Part No. | Description | Reqd. QTY CBR1000RR 4 | 5 | 6 | 7 | Serial No. | Parts catalogue code |
|---|---|---|---|---|---|---|---|---|
| 14 | 90106-KCZ-000 | SCREW, SPECIAL, 6MM ····· | 2 | 2 | - | - | | |
| 15 | 90106-KY2-701 | SCREW, PAN, 6X11 ····· | 2 | 2 | - | - | | |
| 16 | 90118-MR1-000 | SCREW, PAN, 6X14 ····· | 2 | 2 | - | - | | |
| 17 | 90572-MEL-000 | RUBBER, PROTECTOR ····· | 1 | 1 | - | - | | |
| 18 | 90657-SB0-003 | CLIP, SPLASH SHIELD ····· | 2 | 2 | - | - | | |
| 19 | 90683-GR1-003 | CLIP, BODY COVER ····· | 2 | 2 | - | - | | |
| 20 | 93903-24280 | SCREW, TAPPING, 4X10 ····· | 4 | 4 | - | - | | |
| 21 | 80109-MEL-700 | COVER, COUPLER ····· | 1 | 1 | - | - | -------- -------- | K0,2K0 |

# F-19-1 SEAT COWL (CBR1000RR6/7)

K 6

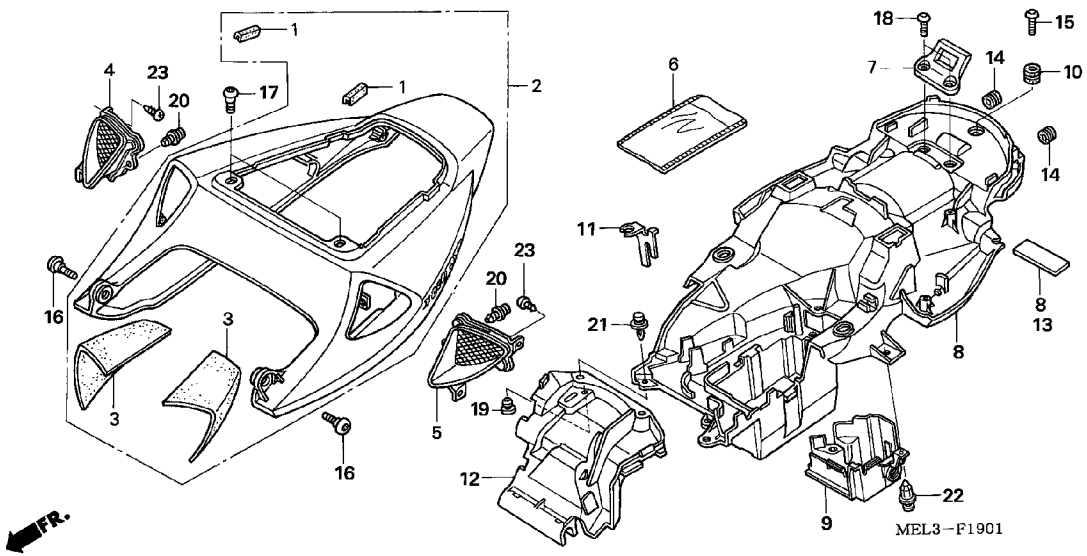


| Ref. No. | L.O.N. | (Relative ref. Number) Description | F.R.T. |
|---|---|---|---|
| 2 | 411135 | COWL, REAR | 0.3 |
| 4 | 4111G2 | DUCT, SEAT COWL :RIGHT | 0.2 |
| | 4111T0 | DUCT, SEAT COWL :BOTH | 0.2 |
| 5 | 4111G3 | DUCT, SEAT COWL :LEFT | 0.2 |
| | 4111T0 | DUCT, SEAT COWL :BOTH | 0.2 |
| 8 | 413110 | FENDER B, REAR | 0.9 |
| 9 | 3131K9 | CASE, EXHAUST BUTTERFLY VALVE SERVO MOTOR | 0.4 |
| 12 | 4131M4 | PROTECTOR, HEAT | 2.2 |

| Ref. No. | Part No. | Description | Reqd. QTY CBR1000RR 4 | 5 | 6 | 7 | Serial No. | Parts catalogue code |
|---|---|---|---|---|---|---|---|---|
| 1 | 64121-MEL-000 | RUBBER, PROTECTOR | - | - | 2 | 2 | | |
| 2 | 77210-MEL-D20ZA | COWL SET, RR. SEAT *TYPE1*(WL) | - | - | 1 | - | -------- -------- | E,ED,EK,F,KO,MX,U |
| | 77210-MEL-D20ZB | COWL SET, RR. SEAT *TYPE2*(WL) | - | - | 1 | - | | |
| | | | - | - | - | 1 | -------- -------- | BR,E,ED,EK,F,KO,MX,U |
| | 77210-MEL-D20ZC | COWL SET, RR. SEAT *TYPE3*(WL) | - | - | 1 | - | -------- -------- | BR,E,ED,EK,F,MX,U |
| | 77210-MEL-D20ZD | COWL SET, RR. SEAT *TYPE4*(WL) | - | - | 1 | - | -------- -------- | MX,U |
| | 77210-MEL-D30ZA | COWL SET, RR. SEAT *TYPE2*(WL) | - | - | - | 1 | -------- -------- | BR,MX,U |
| | 77210-MEL-D30ZC | COWL SET, RR. SEAT *TYPE4*(WL) | - | - | - | 1 | -------- -------- | MX,U |
| | 77210-MEL-D30ZD | COWL SET, RR. SEAT *TYPE1*(WL) | - | - | - | 1 | -------- -------- | E,ED,EK,F,KO |
| | 77210-MEL-D40ZA | | - | - | - | 1 | -------- -------- | 2ED,2F,3E,4EK |
| 3 | 77221-MEL-300 | SEAL, RR. SEAT COWL | - | - | 2 | 2 | | |
| 4 | 77223-MEL-D00 | DUCT COMP., R. SEAT COWL | - | - | 1 | 1 | | |
| 5 | 77224-MEL-D00 | DUCT COMP., L. SEAT COWL | - | - | 1 | 1 | | |
| 6 | 77251-GR1-000 | BAG, SERVICE BOOK | - | - | 1 | 1 | | |
| 7 | 77310-MEE-940 | BRACKET, SEAT HOOK | - | - | 1 | 1 | | |
| 8 | 80105-MEL-D20 | FENDER COMP. B, RR. | - | - | 1 | - | | |
| | 80105-MEL-D30 | | - | - | - | 1 | | |
| 9 | 80106-MEL-D20 | CASE, SERVO MOTOR | - | - | 1 | 1 | | |
| 10 | 80107-GE0-710 | RUBBER, RR. FENDER SETTING | - | - | 1 | 1 | | |
| 11 | 80107-MEL-D20 | STAY, LOCK CABLE | - | - | 1 | 1 | | |
| 12 | 80110-MEL-D20 | PROTECTOR, HEAT | - | - | 1 | 1 | | |
| 13 | 81257-GAZ-300 | INSULATOR, LUGGAGE BOX | - | - | 1 | 1 | | |
| 14 | 83501-MG7-000 | GROMMET, SIDE COVER | - | - | 2 | 2 | | |
| 15 | 90085-KFB-000 | BOLT, SPECIAL, 6X22 | - | - | 1 | - | | |
| | 90085-MAJ-A20 | | - | - | - | 1 | | |
| 16 | 90106-KCZ-000 | SCREW, SPECIAL, 6MM | - | - | 2 | 2 | | |

3

# F-19-1 SEAT COWL (CBR1000RR6/7)

K 7

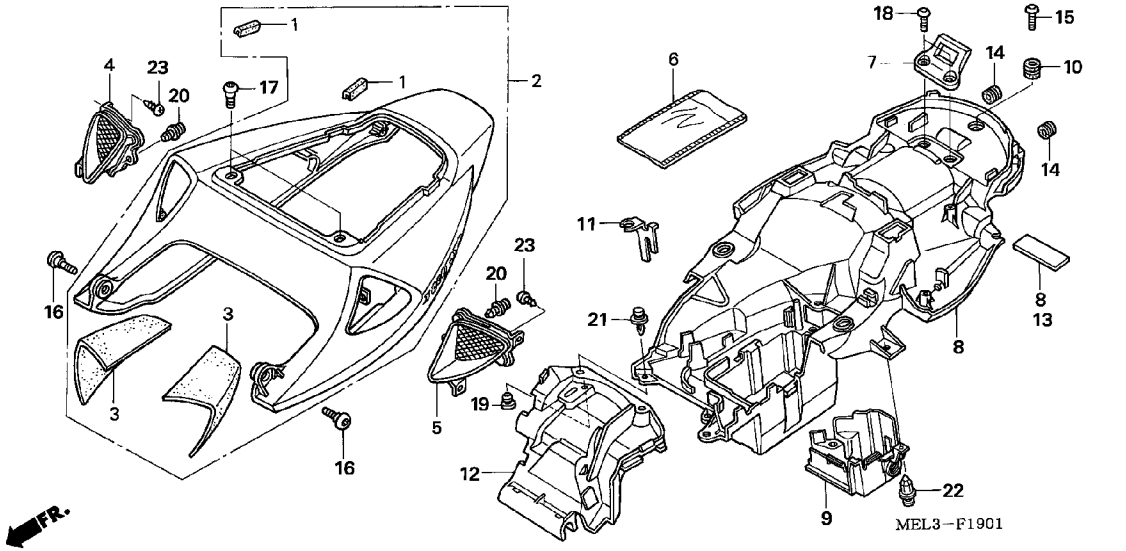


| Ref. No. | Part No. | Description | Reqd. QTY CBR1000RR 4 | 5 | 6 | 7 | Serial No. | Parts catalogue code |
|---|---|---|---|---|---|---|---|---|
| 17 | 90106-KY2-701 | SCREW, PAN, 6X11 ····· | - | - | 2 | 2 | | |
| 18 | 90118-MR1-000 | SCREW, PAN, 6X14 ····· | - | - | 2 | 2 | | |
| 19 | 90572-MEL-000 | RUBBER, PROTECTOR ····· | - | - | 1 | 1 | | |
| 20 | 90657-SB0-003 | CLIP, SPLASH SHIELD ····· | - | - | 2 | 2 | | |
| 21 | 90683-GR1-003 | CLIP, BODY COVER ····· | - | - | 2 | 2 | | |
| 22 | 90683-MBW-003 | CLIP, BODY ····· | - | - | 1 | 1 | | |
| 23 | 93903-24280 | SCREW, TAPPING, 4X10 ····· | - | - | 4 | 4 | | |

# F-20 AIR CLEANER (CBR1000RR4/5)

K 8

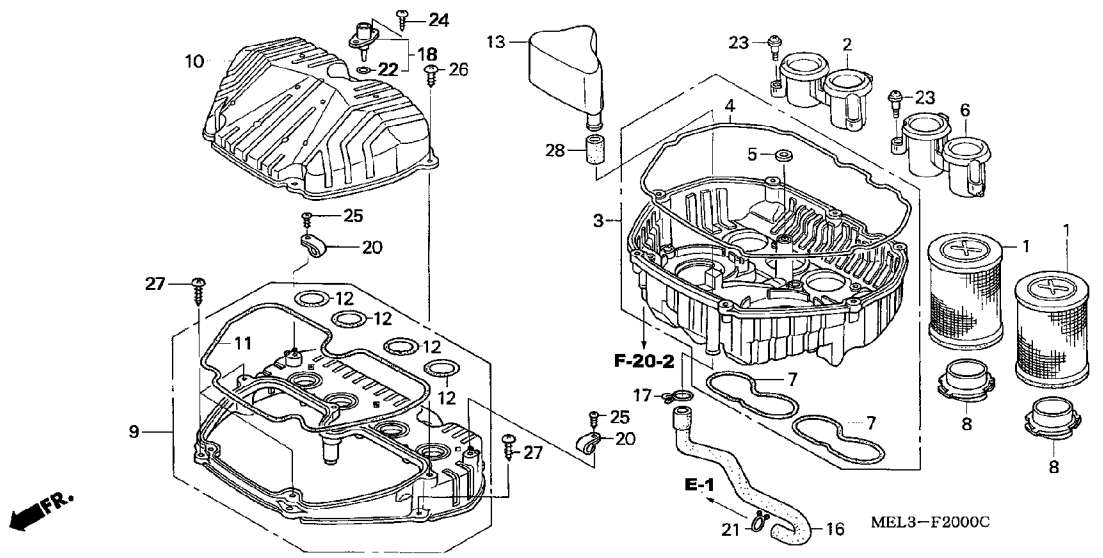


| Ref. No. | L.O.N. | (Relative ref. Number) Description | F.R.T. |
|---|---|---|---|
| 1 | | (8) | |
| | 312105 | ELEMENT, AIR CLEANER ····· | 0.3 |
| | | .NOTE: Same time for two units | |
| 2 | 3121C9 | FUNNEL, AIR :RIGHT ····· | 0.5 |
| | 3121E2 | FUNNEL, AIR :BOTH ····· | 0.5 |
| 3 | | (7) | |
| | 3121D1 | CASE, AIR CLEANER :LOWER ····· | 0.7 |
| 6 | 3121C8 | FUNNEL, AIR :LEFT ····· | 0.5 |
| | 3121E2 | FUNNEL, AIR :BOTH ····· | 0.5 |
| 9 | 3121D0 | CASE, AIR CLEANER :MIDDLE ···· | 0.5 |
| 10 | | (11) | |
| | 312102 | COVER, AIR CLEANER CASE ····· | 0.3 |
| 13 | 312110 | TANK, BREATHER ····· | 0.3 |
| 18 | 617120 | SENSOR, AIR TEMP ····· | 0.3 |

| Ref. No. | Part No. | Description | Reqd. QTY CBR1000RR 4 | 5 | 6 | 7 | Serial No. | Parts catalogue code |
|---|---|---|---|---|---|---|---|---|
| 1 | 17210-MEL-000 | ELEMENT, AIR CLEANER ····· | 2 | 2 | - | - | | |
| 2 | 17215-MEL-000 | FUNNEL, R. AIR ····· | 1 | 1 | - | - | | |
| 3 | 17220-MEL-000 | CASE COMP., AIR CLEANER LOWER | 1 | - | - | - | -------- -------- | BR,F,G,MX,U |
| | 17220-MEL-010 | ····· | 1 | - | - | - | -------- -------- | E,ED,KO |
| | | | - | 1 | - | - | | |
| 4 | 17222-MEL-300 | SEAL A, AIR CLEANER CASE ···· | 1 | 1 | - | - | | |
| 5 | 17223-MEL-300 | SEAL B, AIR CLEANER CASE ···· | 1 | 1 | - | - | | |
| 6 | 17225-MEL-000 | FUNNEL, L. AIR ····· | 1 | 1 | - | - | | |
| 7 | 17226-MEL-300 | SEAL C, AIR CLEANER CASE ···· | 2 | 2 | - | - | | |
| 8 | 17228-MEL-000 | SEPARATOR, AIR CLEANER ····· | 2 | 2 | - | - | | |
| 9 | 17230-MEL-000 | CASE COMP., AIR CLEANER MIDDLE | 1 | 1 | - | - | | |
| 10 | 17231-MEL-000 | COVER, AIR CLEANER ····· | 1 | 1 | - | - | | |
| 11 | 17233-MEL-300 | SEAL E, AIR CLEANER CASE ···· | 1 | 1 | - | - | | |
| 12 | 17234-MEL-300 | SEAL F, AIR CLEANER CASE ···· | 4 | 4 | - | - | | |
| 13 | 17235-MEL-000 | TANK, BREATHER ····· | 1 | 1 | - | - | | |
| 16 | 17551-MEL-000 | TUBE, BREATHER ····· | 1 | 1 | - | - | | |
| 17 | 17724-102-700 | CLIP, SUB TANK HOSE ····· | 1 | - | - | - | | |
| | 17554-MB0-000 | CLIP, BREATHER TUBE ····· | - | 1 | - | - | | |
| 18 | 37880-P05-A00 | SENSOR ASSY., AIR TEMP ····· | 1 | 1 | - | - | | |
| 20 | 90627-ZA8-801 | CLIP (9MM) ····· | 2 | 2 | - | - | | |
| 21 | 90646-657-000 | CLIP, AIR HOSE, 16MM ····· | 1 | 1 | - | - | | |
| 22 | 91303-PK2-005 | O-RING, 7.5X1.5 ····· | 1 | 1 | - | - | | |
| 23 | 91508-MM5-000 | SCREW, PAN, 5MM ····· | 6 | 6 | - | - | | |
| 24 | 93901-25420 | SCREW, TAPPING, 5X20 ····· | 2 | 2 | - | - | | |
| 25 | 93913-24280 | SCREW, TAPPING, 4X12(PO) ···· | 2 | 2 | - | - | | |

# AIR CLEANER (CBR1000RR4/5)



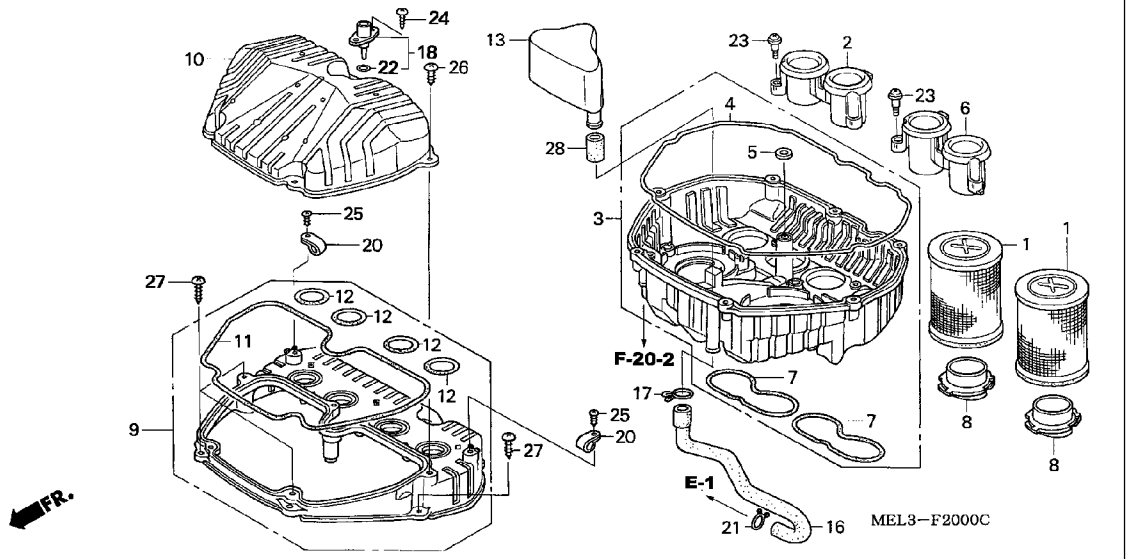


| Ref. No. | Part No. | Description | Reqd. QTY CBR1000RR 4 | 5 | 6 | 7 | Serial No. | Parts catalogue code |
|---|---|---|---|---|---|---|---|---|
| 26 | 93903-25480 | SCREW, TAPPING, 5X20 ..... | 7 | 7 | - | - | | |
| 27 | 93903-25480 | SCREW, TAPPING, 5X20 ..... | 7 | 7 | - | - | | |
| 28 | 95005-12030-20 | TUBE, 12X30(95005-12001-20M) | 1 | 1 | - | - | | |

# F-20-1 AIR INTAKE DUCT/SOLENOID VALVE(CBR1000RR4/5)

K10

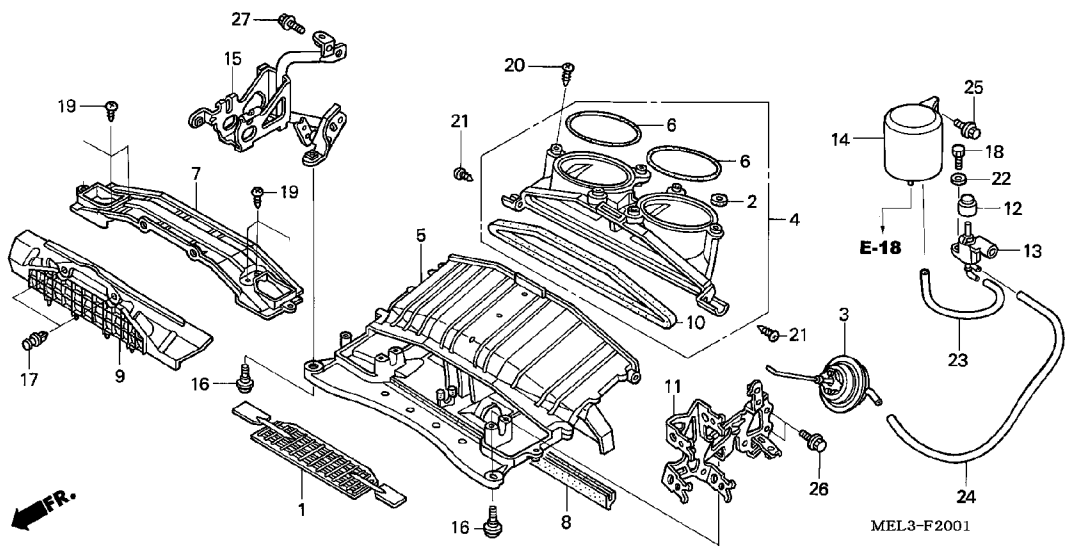


| Ref. No. | L.O.N. | (Relative ref. Number) Description | F.R.T. |
|---|---|---|---|
| 1 | | (7) | |
| | 312133 | VALVE, AIR CONTROL ····· | 1.0 |
| 3 | 3121B3 | DIAPHRAGM, AIR INTAKE DUCT VALVE CONTROL ····· | 1.0 |
| 4 | | (10) | |
| | 3121D2 | JOINT, AIR INTAKE ····· | 1.0 |
| 5 | | (7) | |
| | 3121D3 | DUCT, AIR INTAKE ····· | 1.0 |
| 9 | 3121D4 | GRILL, AIR INTAKE DUCT ····· | 0.5 |
| 11 | 4101J9 | STAY, UPPER RADIATOR :LEFT ··· | 0.5 |
| 13 | 314141 | VALVE, AIR INTAKE CONTROL SOLENOID ····· | 0.3 |
| 14 | 3121C4 | CHAMBER, VACUUM ····· | 0.2 |
| 15 | 6181A3 | STAY, ENGINE CONTROL MODULE ·· | 0.6 |

| Ref. No. | Part No. | Description | Reqd. QTY CBR1000RR 4 | 5 | 6 | 7 | Serial No. | Parts catalogue code |
|---|---|---|---|---|---|---|---|---|
| 1 | 17204-MEL-000 | VALVE COMP., AIR CONTROL ···· | 1 | 1 | - | - | | |
| 2 | 17223-MEL-300 | SEAL B, AIR CLEANER CASE ···· | 6 | 6 | - | - | | |
| 3 | 17238-MEL-000 | DIAPHRAGM, CONTROL VALVE ···· | 1 | 1 | - | - | | |
| 4 | 17240-MEL-000 | JOINT COMP., AIR INTAKE ····· | 1 | 1 | - | - | | |
| 5 | 17251-MEL-000 | DUCT COMP., AIR INTAKE ····· | 1 | - | - | - | -------- -------- | BR,F,G,MX,U |
| | 17251-MEL-010 | ····· | 1 | - | - | - | -------- -------- | E,ED,KO |
| | | | - | 1 | - | - | | |
| 6 | 17254-MEL-300 | SEAL G, AIR CLEANER ····· | 2 | 2 | - | - | | |
| 7 | 17257-MEL-000 | COVER COMP., AIR INTAKE DUCT | 1 | 1 | - | - | | |
| 8 | 17259-MEL-300 | RUBBER, SEAL ····· | 1 | 1 | - | - | | |
| 9 | 17260-MEL-000 | GRILL, AIR INTAKE DUCT ····· | 1 | 1 | - | - | | |
| 10 | 17275-MEL-300 | SEAL, FR. DUCT ····· | 1 | 1 | - | - | | |
| 11 | 19170-MEL-020 | STAY, L. UPPER RADIATOR ····· | 1 | 1 | - | - | | |
| 12 | 36138-PR7-A01 | FILTER ASSY., SOLENOID VALVE | 1 | 1 | - | - | | |
| 13 | 36163-PV0-004 | VALVE ASSY., BYPASS CONTROL SOLENOID | 1 | 1 | - | - | | |
| 14 | 36625-POA-A01 | TANK COMP., VACUUM ····· | 1 | 1 | - | - | | |
| 15 | 38774-MEL-000 | STAY, PGM-FI UNIT ····· | 1 | - | - | - | | |
| | 38774-MEL-D00 | ····· | - | 1 | - | - | | |
| 16 | 90114-MAC-780 | BOLT, FR. DISK COVER ····· | 2 | 2 | - | - | | |
| 17 | 91549-MW0-790ZA | CLIP, PANEL FIXING *NH1*.....BLACK | 2 | 2 | - | - | | |
| 18 | 92101-05014-0A | BOLT, HEX., 5X14 ····· | 1 | 1 | - | - | | |
| 19 | 93903-24480 | SCREW, TAPPING, 4X16 ····· | 6 | 6 | - | - | | |
| 20 | 93903-25320 | SCREW, TAPPING, 5X16 ····· | 6 | 6 | - | - | | |

3

# F-20-1 AIR INTAKE DUCT/SOLENOID VALVE(CBR1000RR4/5)

K11

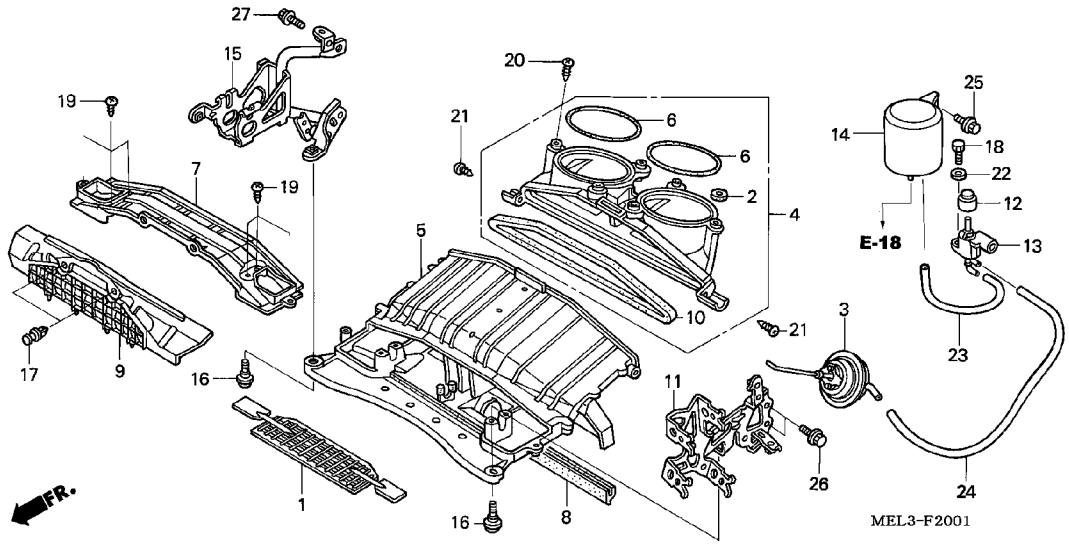


| Ref. No. | Part No. | Description | Reqd. QTY CBR1000RR 4 | 5 | 6 | 7 | Serial No. | Parts catalogue code |
|---|---|---|---|---|---|---|---|---|
| 21 | 93903-25380 | SCREW, TAPPING, 5X16 ..... | 2 | 2 | - | - | | |
| 22 | 94101-05000 | WASHER, PLAIN, 5MM ..... | 1 | 1 | - | - | | |
| 23 | 95005-35100-20 | TUBE, 3.5X100(95005-35001-20M) | 1 | 1 | - | - | | |
| 24 | 95005-45230-20 | TUBE, 4.5X230(95005-45001-20M) | 1 | 1 | - | - | | |
| 25 | 96001-06012-00 | BOLT, FLANGE, 6X12 ..... | 1 | 1 | - | - | | |
| 26 | 96001-06014-00 | BOLT, FLANGE, 6X14 ..... | 2 | 2 | - | - | | |
| 27 | 96300-06014-07 | BOLT, FLANGE, 6X14 ..... | 2 | 2 | - | - | | |

# F-20-2 AIR INJECTION CONTROL VALVE(CBR1000RR4/5)

K12

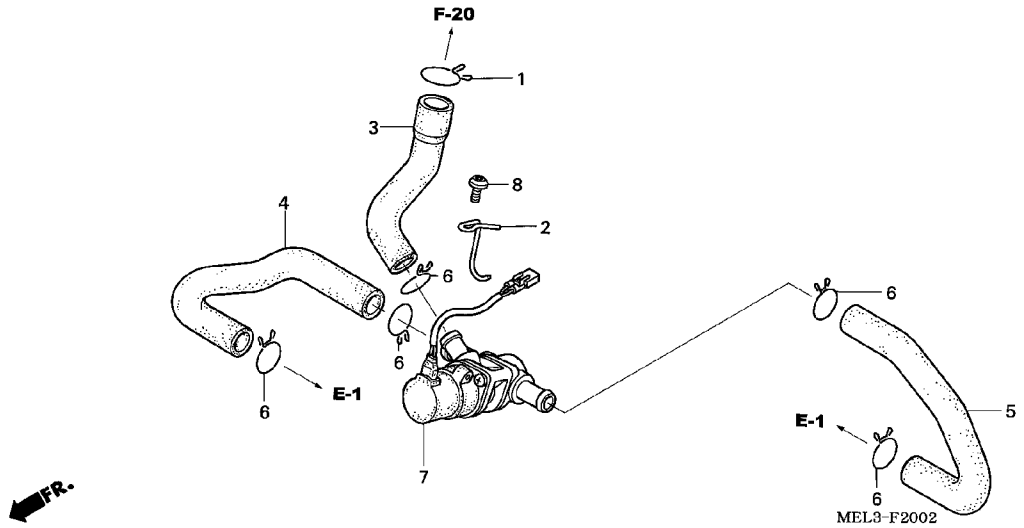


| Ref. No. | L.O.N. | (Relative ref. Number) Description | F.R.T. |
|---|---|---|---|
| 7 | | (3,4,5) | |
| | 314130 | VALVE, SECONDARY AIR CONTROL · | 1.0 |

| Ref. No. | Part No. | Description | Reqd. QTY CBR1000RR 4 | 5 | 6 | 7 | Serial No. | Parts catalogue code |
|---|---|---|---|---|---|---|---|---|
| 1 | 15772-GB5-670 | CLIP B20, DRAIN TUBE ····· | 1 | 1 | - | - | | |
| 2 | 17269-MEL-000 | STAY, AIR INJECTION CONTROL VALVE | 1 | 1 | - | - | | |
| 3 | 17460-MEL-000 | TUBE, AIR SUCTION UPPER ····· | 1 | 1 | - | - | | |
| 4 | 17465-MEL-000 | TUBE, R. AIR SUCTION ····· | 1 | 1 | - | - | | |
| 5 | 17466-MEL-000 | TUBE, L. AIR SUCTION ····· | 1 | 1 | - | - | | |
| 6 | 17724-102-700 | CLIP, SUB TANK HOSE ····· | 5 | - | - | - | | |
| | 17554-MB0-000 | CLIP, BREATHER TUBE ····· | - | 5 | - | - | | |
| 7 | 36450-MEL-640 | VALVE ASSY., EX. AIR INJECTION | 1 | 1 | - | - | | |
| 8 | 90116-MAS-E00 | BOLT, SPECIAL, 6X16 ····· | 1 | 1 | - | - | | |

3

# AIR CLEANER (CBR1000RR6/7)



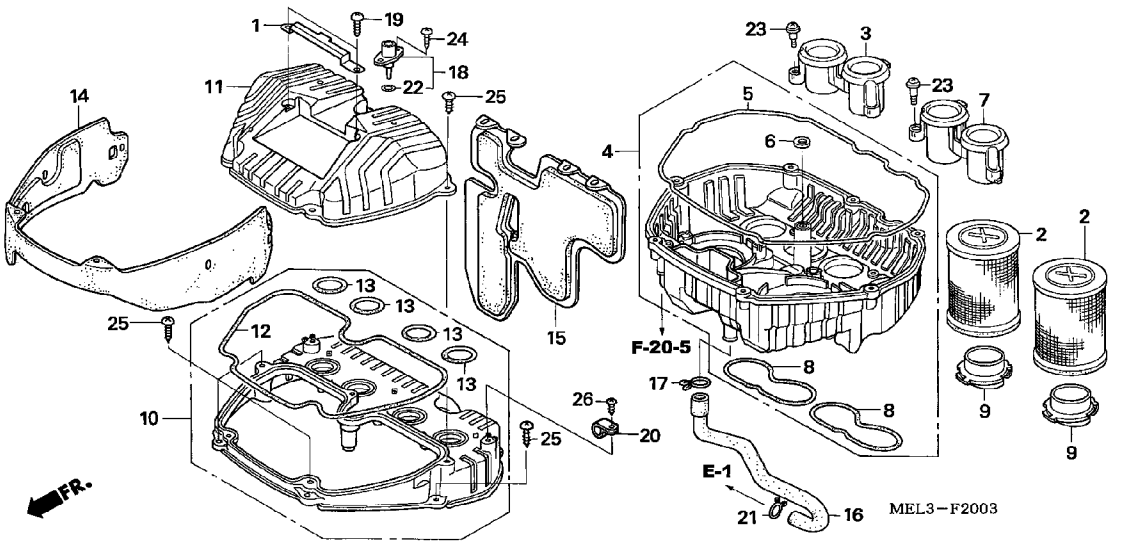


| Ref. No. | L.O.N. | (Relative ref. Number) Description | F.R.T. |
|---|---|---|---|
| 2 | | (9) | |
| | 312105 | ELEMENT, AIR CLEANER ····· | 0.3 |
| | | .NOTE: Same time for two units | |
| 3 | 3121C9 | FUNNEL, AIR :RIGHT ····· | 0.5 |
| | 3121E2 | FUNNEL, AIR :BOTH ····· | 0.5 |
| 4 | | (8) | |
| | 3121D1 | CASE, AIR CLEANER :LOWER ····· | 0.7 |
| 7 | 3121C8 | FUNNEL, AIR :LEFT ····· | 0.5 |
| | 3121E2 | FUNNEL, AIR :BOTH ····· | 0.5 |
| 10 | 3121D0 | CASE, AIR CLEANER :MIDDLE ···· | 0.5 |
| 11 | | (12) | |
| | 312102 | COVER, AIR CLEANER CASE ····· | 0.3 |
| 18 | 617120 | SENSOR, AIR TEMP ····· | 0.3 |

| Ref. No. | Part No. | Description | Reqd. QTY CBR1000RR 4 | 5 | 6 | 7 | Serial No. | Parts catalogue code |
|---|---|---|---|---|---|---|---|---|
| 1 | 17209-MEL-D20 | PLATE, PGM-FI UNIT SETTING ·· | - | - | 1 | 1 | | |
| 2 | 17210-MEL-000 | ELEMENT, AIR CLEANER ····· | - | - | 2 | 2 | | |
| 3 | 17215-MEL-D21 | FUNNEL, R. AIR ····· | - | - | 1 | 1 | -------- -------- | BR,E,ED,EK,KO,MX,U,2ED,3E,4EK |
| | 17215-MEL-F21 | ····· | - | - | 1 | 1 | -------- -------- | F,2F |
| 4 | 17220-MEL-D20 | CASE COMP., AIR CLEANER LOWER | - | - | 1 | 1 | | |
| 5 | 17222-MEL-300 | SEAL A, AIR CLEANER CASE ···· | - | - | 1 | 1 | | |
| 6 | 17223-MEL-300 | SEAL B, AIR CLEANER CASE ···· | - | - | 1 | 1 | | |
| 7 | 17225-MEL-D21 | FUNNEL, L. AIR ····· | - | - | 1 | 1 | -------- -------- | BR,E,ED,EK,KO,MX,U,2ED,3E,4EK |
| | 17225-MEL-F21 | ····· | - | - | 1 | 1 | -------- -------- | F,2F |
| 8 | 17226-MEL-300 | SEAL C, AIR CLEANER CASE ···· | - | - | 2 | 2 | | |
| 9 | 17228-MEL-D20 | SEPARATOR, AIR CLEANER ····· | - | - | 2 | 2 | | |
| 10 | 17230-MEL-000 | CASE COMP., AIR CLEANER MIDDLE | - | - | 1 | 1 | | |
| 11 | 17231-MEL-D20 | COVER, AIR CLEANER ····· | - | - | 1 | 1 | | |
| 12 | 17233-MEL-300 | SEAL E, AIR CLEANER CASE ···· | - | - | 1 | 1 | | |
| 13 | 17234-MEL-300 | SEAL F, AIR CLEANER CASE ···· | - | - | 4 | 4 | | |
| 14 | 17280-MEL-A00 | COVER COMP., FR. AIR CLEANER | - | - | 1 | 1 | | |
| 15 | 17285-MEL-A00 | COVER COMP., RR. AIR CLEANER | - | - | 1 | 1 | | |
| 16 | 17551-MEL-000 | TUBE, BREATHER ····· | - | - | 1 | 1 | | |
| 17 | 17724-102-700 | CLIP, SUB TANK HOSE ····· | - | - | 1 | 1 | | |
| 18 | 37880-P05-A00 | SENSOR ASSY., AIR TEMP ····· | - | - | 1 | 1 | | |
| 19 | 90105-MEL-D20 | SCREW, TAPPING, 4X18 ····· | - | - | 2 | 2 | | |
| 20 | 90627-ZA8-801 | CLIP (9MM) ····· | - | - | 1 | 1 | | |
| 21 | 90646-657-000 | CLIP, AIR HOSE, 16MM ····· | - | - | 1 | 1 | | |
| 22 | 91303-PK2-005 | O-RING, 7.5X1.5 ····· | - | - | 1 | 1 | | |
| 23 | 91508-MM5-000 | SCREW, PAN, 5MM ····· | - | - | 6 | 6 | | |

# AIR CLEANER (CBR1000RR6/7)



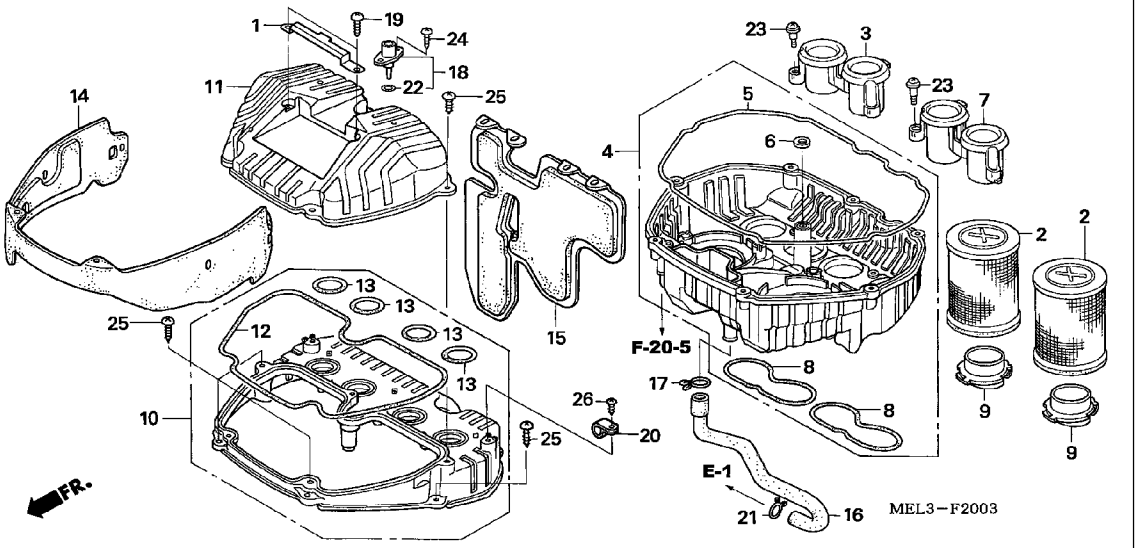


| Ref. No. | Part No. | Description | Reqd. QTY CBR1000RR 4 | 5 | 6 | 7 | Serial No. | Parts catalogue code |
|---|---|---|---|---|---|---|---|---|
| 24 | 93901-25420 | SCREW, TAPPING, 5X20 ····· | - | - | 2 | 2 | | |
| 25 | 93903-25480 | SCREW, TAPPING, 5X20 ····· | - | - | 14 | 14 | | |
| 26 | 93913-24280 | SCREW, TAPPING, 4X12(PO) ···· | - | - | 1 | 1 | | |

# F-20-4 AIR INTAKE DUCT/SOLENOID VALVE(CBR1000RR6/7)

K15

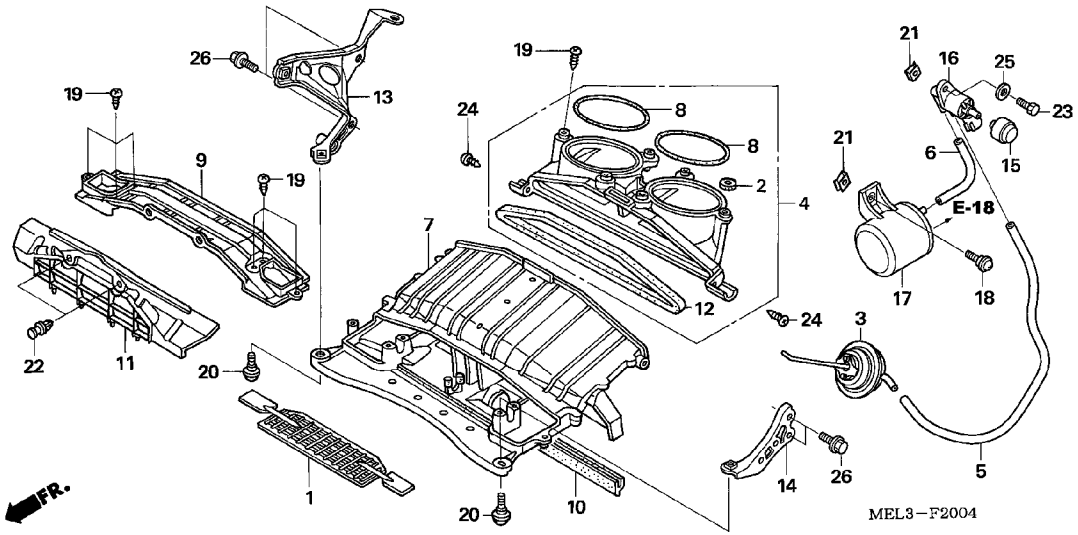


| Ref. No. | L.O.N. | (Relative ref. Number) Description | F.R.T. |
|---|---|---|---|
| 1 | 312133 | VALVE, AIR CONTROL ····· | 1.3 |
| 3 | 3121B3 | DIAPHRAGM, AIR INTAKE DUCT VALVE CONTROL ····· | 1.3 |
| 4 | 3121D2 | JOINT, AIR INTAKE ····· | 1.2 |
| 7 | 3121D3 | DUCT, AIR INTAKE ····· | 1.3 |
| 11 | 3121D4 | GRILL, AIR INTAKE DUCT ····· | 0.7 |
| 13 | 4101W7 | STAY, UPPER RADIATOR :RIGHT ·· | 0.7 |
| | 4101W8 | STAY, UPPER RADIATOR :BOTH ··· | 0.8 |
| 14 | 4101J9 | STAY, UPPER RADIATOR :LEFT ··· | 0.6 |
| | 4101W8 | STAY, UPPER RADIATOR :BOTH ··· | 0.8 |
| 16 | 314141 | VALVE, AIR INTAKE CONTROL SOLENOID ····· | 0.4 |
| 17 | 3121C4 | CHAMBER, VACUUM ····· | 0.3 |

3

| Ref. No. | Part No. | Description | Reqd. QTY CBR1000RR 4 | 5 | 6 | 7 | Serial No. | Parts catalogue code |
|---|---|---|---|---|---|---|---|---|
| 1 | 17204-MEL-000 | VALVE COMP., AIR CONTROL ···· | - | - | 1 | 1 | | |
| 2 | 17223-MEL-300 | SEAL B, AIR CLEANER CASE ···· | - | - | 6 | 6 | | |
| 3 | 17238-MEL-D20 | DIAPHRAGM, CONTROL VALVE ···· | - | - | 1 | 1 | | |
| 4 | 17240-MEL-D20 | JOINT COMP., AIR INTAKE ····· | - | - | 1 | 1 | | |
| 5 | 17241-MEL-D20 | TUBE (4.5X245) ····· | - | - | 1 | 1 | | |
| 6 | 17242-MEL-D20 | TUBE (3.5X75) ····· | - | - | 1 | 1 | | |
| 7 | 17251-MEL-D20 | DUCT COMP., AIR INTAKE ····· | - | - | 1 | 1 | | |
| 8 | 17254-MEL-300 | SEAL G, AIR CLEANER ····· | - | - | 2 | 2 | | |
| 9 | 17257-MEL-D20 | COVER COMP., AIR INTAKE DUCT | - | - | 1 | 1 | | |
| 10 | 17259-MEL-300 | RUBBER, SEAL ····· | - | - | 1 | 1 | | |
| 11 | 17260-MEL-D20 | GRILL, AIR INTAKE DUCT ····· | - | - | 1 | 1 | | |
| 12 | 17275-MEL-300 | SEAL, FR. DUCT ····· | - | - | 1 | 1 | | |
| 13 | 19160-MEL-D20 | STAY, R. UPPER RADIATOR ····· | - | - | 1 | 1 | | |
| 14 | 19170-MEL-D20 | STAY, L. UPPER RADIATOR ····· | - | - | 1 | 1 | | |
| 15 | 36138-PR7-A01 | FILTER ASSY., SOLENOID VALVE | - | - | 1 | 1 | | |
| 16 | 36163-PV0-004 | VALVE ASSY., BYPASS CONTROL SOLENOID | - | - | 1 | 1 | | |
| 17 | 36625-P0A-A01 | TANK COMP., VACUUM ····· | - | - | 1 | 1 | | |
| 18 | 90105-MB1-000 | SCREW, SPECIAL, 5X12 ····· | - | - | 1 | 1 | | |
| 19 | 90107-MEL-D20 | SCREW, TAPPING, 5X16 ····· | - | - | 12 | 12 | | |
| 20 | 90114-MAC-780 | BOLT, FR. DISK COVER ····· | - | - | 2 | 2 | | |
| 21 | 90312-MT3-000 | NUT, CLIP, 5MM ····· | - | - | 2 | 2 | | |
| 22 | 91549-MW0-790ZA | CLIP, PANEL FIXING *NH1*.....BLACK | - | - | 2 | 2 | | |
| 23 | 93500-05016-0G | SCREW, PAN, 5X16 ····· | - | - | 1 | 1 | | |

# AIR INTAKE DUCT/SOLENOID VALVE(CBR1000RR6/7)



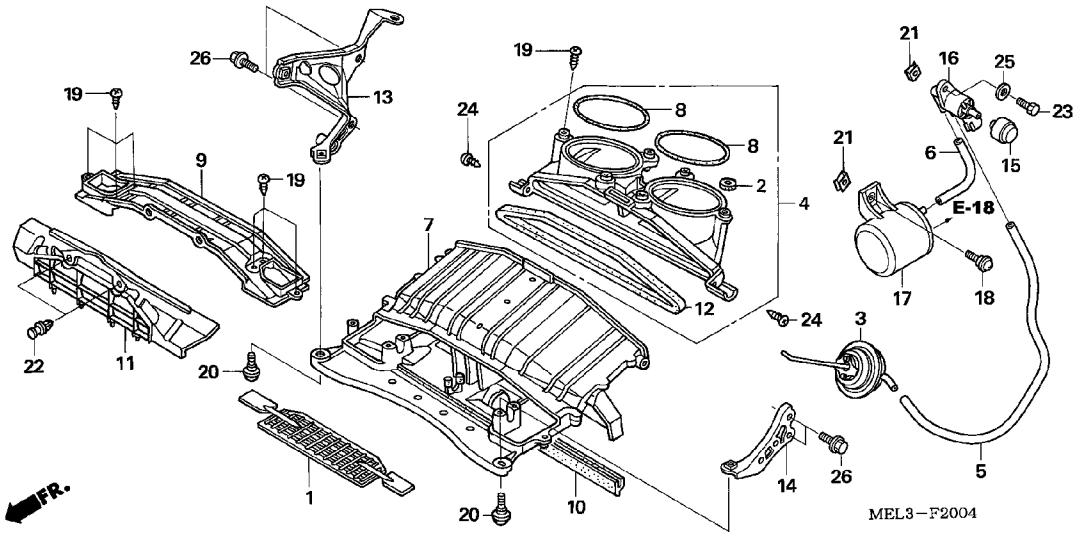


| Ref. No. | Part No. | Description | Reqd. QTY CBR1000RR 4 | 5 | 6 | 7 | Serial No. | Parts catalogue code |
|---|---|---|---|---|---|---|---|---|
| 24 | 93903-25380 | SCREW, TAPPING, 5X16 ..... | - | - | 2 | 2 | | |
| 25 | 94101-05000 | WASHER, PLAIN, 5MM ..... | - | - | 1 | 1 | | |
| 26 | 96001-06014-00 | BOLT, FLANGE, 6X14 ..... | - | - | 4 | 4 | | |

# F-20-5 AIR INJECTION CONTROL VALVE(CBR1000RR6/7)

L 1

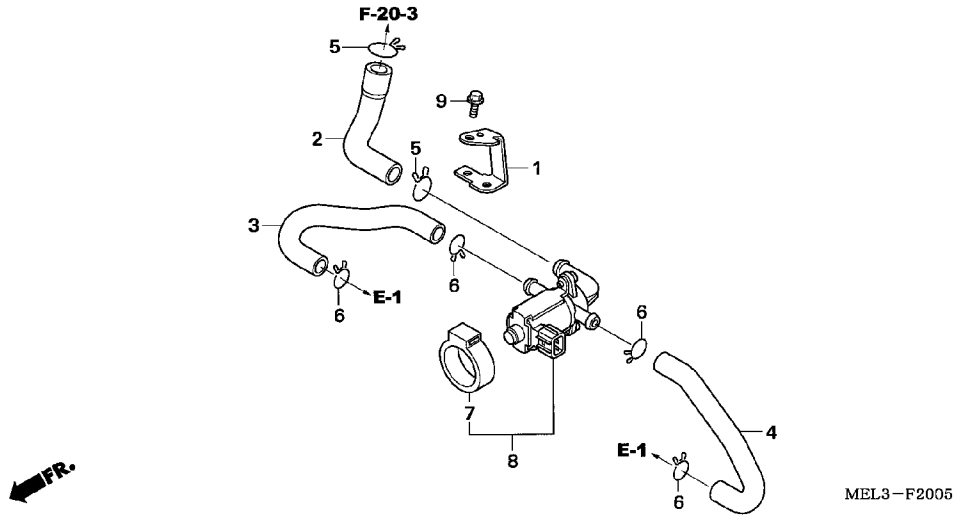


| Ref. No. | L.O.N. | (Relative ref. Number) Description | F.R.T. |
|---|---|---|---|
| 8 | | (2,3,4) | |
| | 314130 | VALVE, SECONDARY AIR CONTROL · | 1.0 |

| Ref. No. | Part No. | Description | Reqd. QTY CBR1000RR 4 | 5 | 6 | 7 | Serial No. | Parts catalogue code |
|---|---|---|---|---|---|---|---|---|
| 1 | 17269-MEL-D20 | STAY, AIR INJECTION CONTROL VALVE | - | - | 1 | 1 | | |
| 2 | 17460-MEL-D20 | TUBE, AIR SUCTION UPPER ····· | - | - | 1 | 1 | | |
| 3 | 17465-MEL-D20 | TUBE, R. AIR SUCTION ····· | - | - | 1 | 1 | | |
| 4 | 17466-MEL-D20 | TUBE, L. AIR SUCTION ····· | - | - | 1 | 1 | | |
| 5 | 17554-MB0-000 | CLIP, BREATHER TUBE ····· | - | - | 2 | 2 | | |
| 6 | 17724-102-700 | CLIP, SUB TANK HOSE ····· | - | - | 4 | 4 | | |
| 7 | 36172-MCA-A61 | SUSPENSION, SOLENOID VALVE ·· | - | - | 1 | 1 | | |
| 8 | 36450-MEL-D20 | VALVE ASSY., EX. AIR INJECTION | - | - | 1 | 1 | | |
| 9 | 96001-06012-00 | BOLT, FLANGE, 6X12 ····· | - | - | 1 | 1 | | |

# F-21 EXHAUST MUFFLER (CBR1000RR4/5)

L 2

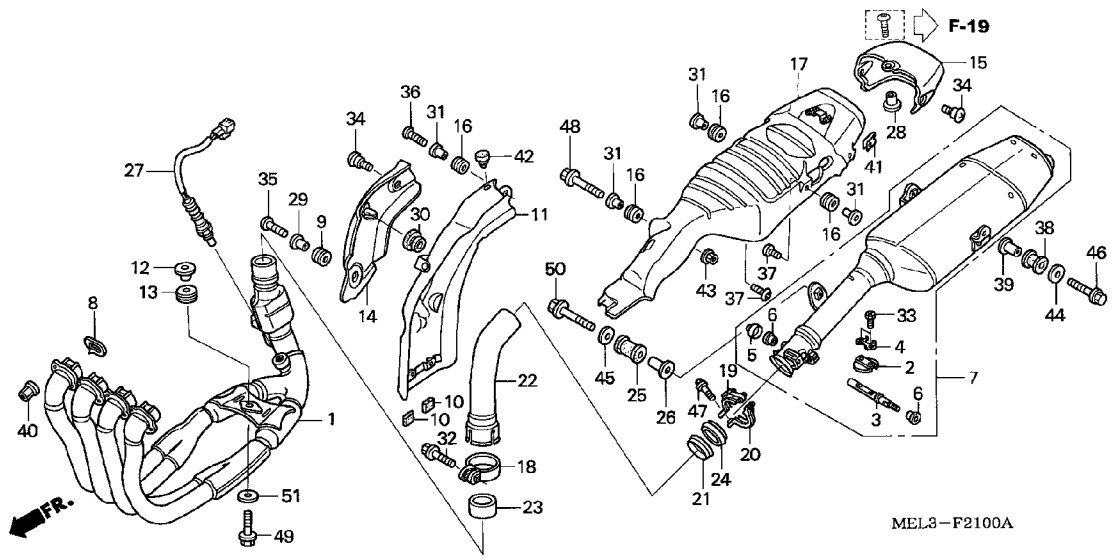


| Ref. No. | L.O.N. | (Relative ref. Number) Description | F.R.T. |
|---|---|---|---|
| 1 | | (18,23) | |
| | 313110 | PIPE, EXHAUST ····· | 0.9 |
| 2 | 313117 | VALVE, EXHAUST BUTTERFLY ····· | 1.8 |
| | | .INCLUDES: Exhaust gas control valve cable adjustment | |
| 6 | | (3) | |
| | 3131D4 | BEARING, EXHAUST BUTTERFLY VALVE SHAFT ····· | 2.0 |
| | | .NOTE: Same time for two units | |
| | | .INCLUDES: Exhaust gas control valve cable adjustment | |
| 7 | 313120 | MUFFLER ····· | 1.7 |
| | | .INCLUDES: Exhaust gas control valve cable adjustment | |
| 8 | 3131B4 | GASKET, EXHAUST PIPE ····· | 0.9 |
| | | .NOTE: Same time for two units or more | |
| 11 | 3131D1 | PROTECTOR, EXHAUST PIPE INNER | 0.2 |
| 14 | 3131D2 | PROTECTOR, EXHAUST PIPE OUTER | 0.1 |
| 15 | 3131D3 | COVER, MUFFLER :REAR ····· | 0.3 |
| 17 | 313121 | PROTECTOR, MUFFLER ····· | 1.6 |
| 22 | | (21,24) | |
| | 313151 | JOINT, EXHAUST PIPE ····· | 1.0 |
| 27 | 617121 | SENSOR, OXYGEN ····· | 0.8 |

| Ref. No. | Part No. | Description | Reqd. QTY CBR1000RR 4 | 5 | 6 | 7 | Serial No. | Parts catalogue code |
|---|---|---|---|---|---|---|---|---|
| 1 | 18150-MEL-013 | PIPE COMP., EX. ····· | 1 | 1 | - | - | -------- -------- | BR,E,ED,EK,F,KO,MX,U,2ED,2F,2KO,2U,3E,4EK |
| | 18150-MEL-611 | ····· | 1 | 1 | - | - | -------- -------- | G,2G |
| 2 | 18176-MEL-000 | VALVE, BUTTERFLY ····· | 1 | 1 | - | - | | |
| 3 | 18177-MEL-000 | SHAFT, BUTTERFLY VALVE ····· | 1 | 1 | - | - | | |
| 4 | 18178-MEL-000 | WASHER, LOCK ····· | 1 | 1 | - | - | | |
| 5 | 18196-MEL-310 | CAP, EX. VALVE ····· | 1 | 1 | - | - | | |
| 6 | 18197-MEL-000 | BEARING, EX. VALVE ····· | 2 | 2 | - | - | | |
| 7 | 18200-MEL-013 | MUFFLER ASSY., EX. VALVE AND EX. | 1 | - | - | - | | |
| | 18200-MEL-D01 | ····· | - | 1 | - | - | | |
| 8 | 18291-MEL-000 | GASKET, EX. PIPE ····· | 4 | 4 | - | - | | |
| 9 | 18293-GN2-000 | RUBBER, PROTECTOR PACKING ··· | 1 | 1 | - | - | | |
| 10 | 18293-MCA-A20 | RUBBER, PROTECTOR PACKING ··· | 2 | 2 | - | - | | |
| 11 | 18325-MEL-013 | PROTECTOR, EX. PIPE INNER ··· | 1 | - | - | - | | |
| | 18325-MEL-D00 | ····· | - | 1 | - | - | | |
| 12 | 18327-KAE-000 | COLLAR, CHAMBER RR. (8.5X15) | 1 | 1 | - | - | | |
| 13 | 18328-MEL-000 | RUBBER, MUFFLER MOUNTING ···· | 1 | 1 | - | - | | |
| 14 | 18330-MEL-003 | PROTECTOR, EX. PIPE OUTER ··· | 1 | - | - | - | | |
| | 18330-MEL-D00 | ····· | - | 1 | - | - | | |
| 15 | 18340-MEL-000 | COVER COMP., MUFFLER RR. ···· | 1 | - | - | - | -------- -------- | BR,F,G,KO,MX,U |
| | 18340-MEL-010 | ····· | 1 | - | - | - | -------- -------- | E,ED |
| | | | - | 1 | - | - | | |
| 16 | 18345-MBT-610 | RUBBER, PROTECTOR MOUNTING ·· | 4 | 4 | - | - | | |
| 17 | 18345-MEL-023 | PROTECTOR, MUFFLER ····· | 1 | - | - | - | | |
| | 18345-MEL-D00 | ····· | - | 1 | - | - | | |
| 18 | 18371-MEL-003 | BAND, MUFFLER ····· | 1 | 1 | - | - | | |

3

# F-21 EXHAUST MUFFLER (CBR1000RR4/5)

L 3

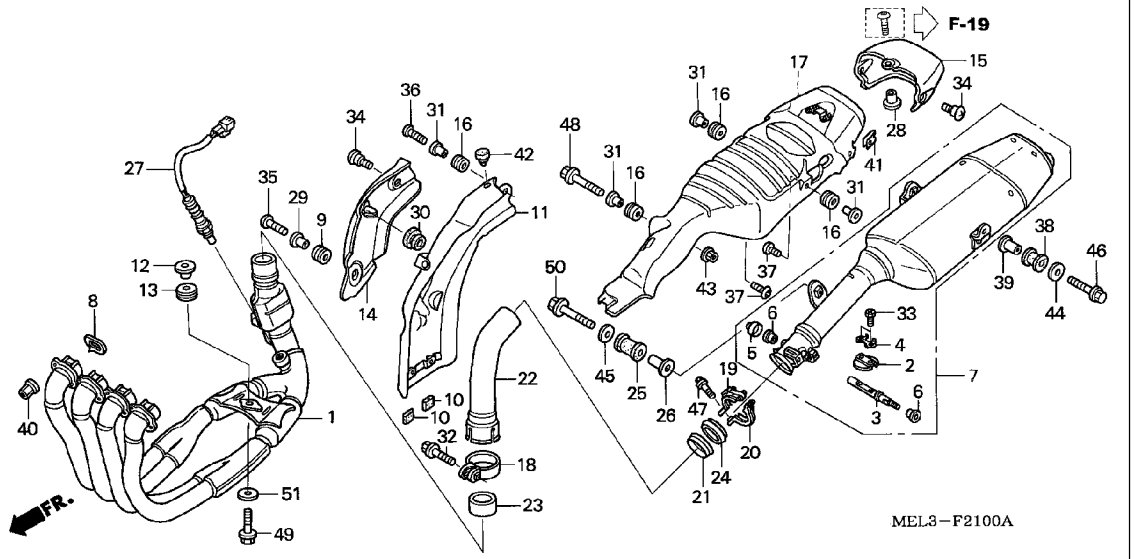


| Ref. No. | Part No. | Description | Reqd. QTY CBR1000RR 4 | 5 | 6 | 7 | Serial No. | Parts catalogue code |
|---|---|---|---|---|---|---|---|---|
| 19 | 18372-MEL-000 | BAND, R. MUFFLER (50.8) ····· | 1 | 1 | - | - | | |
| 20 | 18373-MEL-000 | BAND, L. MUFFLER (50.8) ····· | 1 | 1 | - | - | | |
| 21 | 18375-MEL-000 | PLATE, JOINT (48.6) ····· | 1 | - | - | - | -------- -------- | BR,F,G,KO,MX,U |
| | 18375-MEL-010 | ····· | 1 | - | - | - | -------- -------- | E,ED |
| | | | - | 1 | - | - | | |
| 22 | 18380-MEL-013 | JOINT, EX. ····· | 1 | 1 | - | - | | |
| 23 | 18391-MEL-000 | PACKING, MUFFLER ····· | 1 | 1 | - | - | | |
| 24 | 18392-MEL-000 | PACKING, MUFFLER (50.8) ····· | 1 | 1 | - | - | | |
| 25 | 18421-MB0-000 | RUBBER, MUFFLER MOUNTING ···· | 1 | 1 | - | - | | |
| 26 | 18424-MN5-000 | COLLAR, CHAMBER MOUNTING ···· | 1 | 1 | - | - | | |
| 27 | 36531-MEL-611 | SENSOR, OXYGEN ····· | 1 | 1 | - | - | -------- -------- | G,2G |
| 28 | 50324-425-010 | COLLAR, 6.3X13 ····· | 1 | 1 | - | - | | |
| 29 | 80103-MCJ-750 | COLLAR, FENDER SETTING ····· | 1 | 1 | - | - | | |
| 30 | 83601-MN5-000 | GROMMET, SIDE COVER ····· | 1 | 1 | - | - | | |
| 31 | 84706-415-000 | COLLAR ····· | 4 | 4 | - | - | | |
| 32 | 90103-MCF-D60 | BOLT, FLANGE, 8X35 ····· | 1 | 1 | - | - | | |
| 33 | 90106-MEL-000 | BOLT, SPECIAL, 4X8 ····· | 2 | 2 | - | - | | |
| 34 | 90114-MEL-000 | SCREW, SPECIAL, 5X11 ····· | 3 | 3 | - | - | | |
| 35 | 90115-MEL-000 | SCREW, PAN, 5X15 ····· | 1 | 1 | - | - | | |
| 36 | 90118-MBV-000 | SCREW, PAN, 6X14 ····· | 1 | 1 | - | - | | |
| 37 | 90118-MR1-000 | SCREW, PAN, 6X14 ····· | 2 | 2 | - | - | | |
| 38 | 90201-MBB-000 | CUSHION, EX. PIPE MOUNTING ·· | 2 | 2 | - | - | | |
| 39 | 90202-MBB-000 | COLLAR, 8X18 ····· | 2 | 2 | - | - | | |
| 40 | 90304-MM5-000 | NUT, FLANGE, 7MM ····· | 8 | 8 | - | - | | |

# EXHAUST MUFFLER (CBR1000RR4/5)



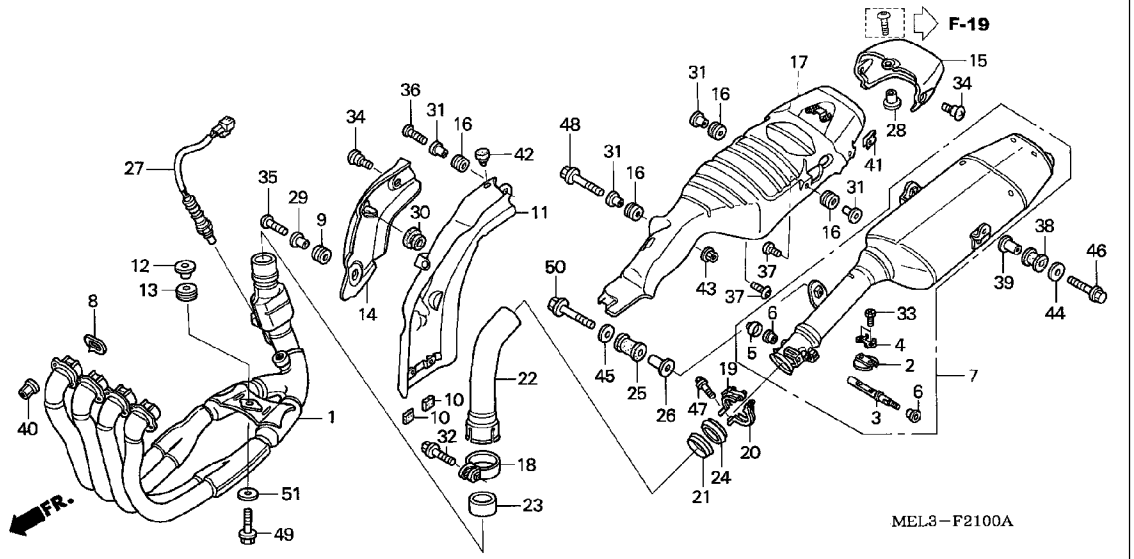


| Ref. No. | Part No. | Description | Reqd. QTY CBR1000RR 4 | 5 | 6 | 7 | Serial No. | Parts catalogue code |
|---|---|---|---|---|---|---|---|---|
| 41 | 90307-MEL-000 | NUT, CLIP, 5MM | 2 | 2 | - | - | | |
| 42 | 90572-MEL-000 | RUBBER, PROTECTOR | 1 | 1 | - | - | | |
| 43 | 94050-06000 | NUT, FLANGE, 6MM | 1 | 1 | - | - | | |
| 44 | 94103-08000 | WASHER, PLAIN, 8MM | 2 | 2 | - | - | | |
| 45 | 94103-08700 | WASHER, PLAIN, 8MM | 1 | 1 | - | - | | |
| 46 | 95801-08030-00 | BOLT, FLANGE, 8X30 | 2 | 2 | - | - | | |
| 47 | 96001-06020-02 | BOLT, FLANGE, 6X20 | 1 | 1 | - | - | | |
| 48 | 96300-06035-00 | BOLT, FLANGE, 6X35 | 1 | 1 | - | - | | |
| 49 | 96400-08032-00 | BOLT, FLANGE, 8X32 | 1 | 1 | - | - | | |
| 50 | 96400-08045-07 | BOLT, FLANGE, 8X45 | 1 | 1 | - | - | | |
| 51 | 90534-MV4-000 | WASHER, 8.5X28 | 1 | 1 | - | - | | |

# EXHAUST MUFFLER (CBR1000RR6/7)



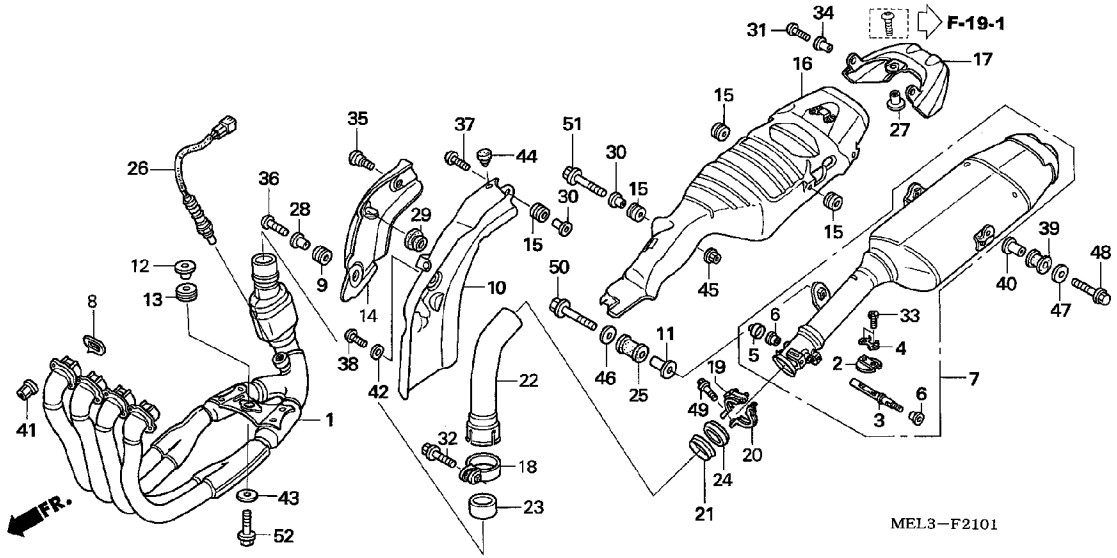


| Ref. No. | L.O.N. | (Relative ref. Number) Description | F.R.T. |
|---|---|---|---|
| 1 | | (18,23) | |
| | 313110 | PIPE, EXHAUST ····· | 1.5 |
| 2 | 313117 | VALVE, EXHAUST BUTTERFLY ····· | 1.5 |
| | | .INCLUDES: Exhaust gas control valve cable adjustment | |
| 6 | | (3) | |
| | 3131D4 | BEARING, EXHAUST BUTTERFLY VALVE SHAFT ····· | 1.7 |
| | | .NOTE: Same time for two units | |
| | | .INCLUDES: Exhaust gas control valve cable adjustment | |
| 7 | 313120 | MUFFLER ····· | 1.4 |
| | | .INCLUDES: Exhaust gas control valve cable adjustment | |
| 8 | 3131B4 | GASKET, EXHAUST PIPE ····· | 1.5 |
| | 3131J3 | GASKET, EXHAUST PIPE :FOR 1 VEHICLE ····· | 1.5 |
| 10 | 3131D1 | PROTECTOR, EXHAUST PIPE INNER | 0.2 |
| 14 | 3131D2 | PROTECTOR, EXHAUST PIPE OUTER | 0.1 |
| 16 | 313121 | PROTECTOR, MUFFLER ····· | 0.9 |
| 17 | 3131F3 | COVER, MUFFLER :UPPER ····· | 0.3 |
| 22 | | (21,24) | |
| | 313151 | JOINT, EXHAUST PIPE ····· | 0.8 |
| 26 | 617121 | SENSOR, OXYGEN ····· | 1.4 |

| Ref. No. | Part No. | Description | Reqd. QTY CBR1000RR 4 | 5 | 6 | 7 | Serial No. | Parts catalogue code |
|---|---|---|---|---|---|---|---|---|
| 1 | 18150-MEL-D21 | PIPE COMP., EX. ····· | - | - | 1 | 1 | -------- -------- | BR,E,ED,EK,F,KO,U,2ED,2F,3E,4EK |
| | 18150-MEL-L20 | ····· | - | - | 1 | 1 | -------- -------- | MX |
| 2 | 18176-MEL-D20 | VALVE, BUTTERFLY ····· | - | - | 1 | 1 | | |
| 3 | 18177-MEL-D20 | SHAFT, BUTTERFLY VALVE ····· | - | - | 1 | 1 | | |
| 4 | 18178-MEL-D20 | WASHER, LOCK ····· | - | - | 1 | 1 | | |
| 5 | 18196-MEL-D20 | CAP, EX. VALVE ····· | - | - | 1 | 1 | | |
| 6 | 18197-MEL-000 | BEARING, EX. VALVE ····· | - | - | 2 | 2 | | |
| 7 | 18200-MEL-A20 | MUFFLER ASSY., EX. VALVE AND EX. | - | - | 1 | 1 | -------- -------- | MX |
| | 18200-MEL-D20 | ····· | - | - | 1 | 1 | -------- -------- | BR,E,ED,EK,F,KO,U,2ED,2F,3E,4EK |
| 8 | 18291-MEL-D20 | GASKET, EX. PIPE ····· | - | - | 4 | 4 | | |
| 9 | 18293-GN2-000 | RUBBER, PROTECTOR PACKING ··· | - | - | 1 | 1 | | |
| 10 | 18325-MEL-D20 | PROTECTOR, EX. PIPE INNER ··· | - | - | 1 | 1 | | |
| 11 | 18326-MEE-D00 | COLLAR, MUFFLER ····· | - | - | 1 | 1 | | |
| 12 | 18327-MEL-D20 | COLLAR, 8.5X15.5 ····· | - | - | 1 | 1 | | |
| 13 | 18328-MEL-000 | RUBBER, MUFFLER MOUNTING ···· | - | - | 1 | 1 | | |
| 14 | 18330-MEL-D00 | PROTECTOR, EX. PIPE OUTER ··· | - | - | 1 | 1 | | |
| 15 | 18345-MBT-610 | RUBBER, PROTECTOR MOUNTING ·· | - | - | 4 | 4 | | |
| 16 | 18345-MEL-D20 | PROTECTOR, MUFFLER ····· | - | - | 1 | 1 | | |
| 17 | 18360-MEL-D20 | COVER, MUFFLER UPPER ····· | - | - | 1 | 1 | | |
| 18 | 18371-MEL-003 | BAND, MUFFLER ····· | - | - | 1 | 1 | | |
| 19 | 18372-MEL-000 | BAND, R. MUFFLER (50.8) ····· | - | - | 1 | 1 | | |
| 20 | 18373-MEL-000 | BAND, L. MUFFLER (50.8) ····· | - | - | 1 | 1 | | |
| 21 | 18375-MEL-010 | PLATE, JOINT (48.6) ····· | - | - | 1 | 1 | | |
| 22 | 18380-MEL-A20 | JOINT, EX. ····· | - | - | 1 | 1 | -------- -------- | MX |

# EXHAUST MUFFLER (CBR1000RR6/7)



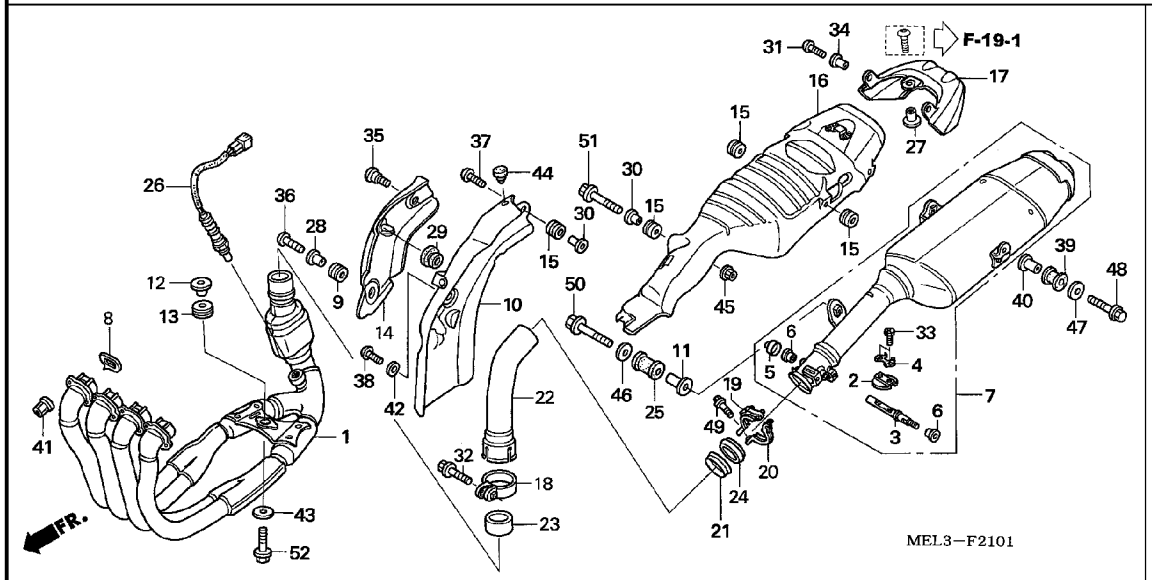


| Ref. No. | Part No. | Description | Reqd. QTY CBR1000RR 4 | 5 | 6 | 7 | Serial No. | Parts catalogue code |
|---|---|---|---|---|---|---|---|---|
| 22) | 18380-MEL-D20 | JOINT, EX. | - | - | 1 | 1 | -------- -------- | BR,E,ED,EK,F,KO,U,2ED,2F,3E,4EK |
| 23 | 18391-MEL-000 | PACKING, MUFFLER | - | - | 1 | 1 | | |
| 24 | 18392-MEL-000 | PACKING, MUFFLER (50.8) | - | - | 1 | 1 | | |
| 25 | 18421-MEE-D00 | RUBBER, MUFFLER MOUNTING | - | - | 1 | 1 | | |
| 26 | 36531-MEL-D21 | SENSOR, OXYGEN | - | - | 1 | 1 | -------- -------- | BR,E,ED,EK,F,KO,U,2ED,2F,3E,4EK |
| 27 | 50324-425-010 | COLLAR, 6.3X13 | - | - | 1 | 1 | | |
| 28 | 80103-MCJ-750 | COLLAR, FENDER SETTING | - | - | 1 | 1 | | |
| 29 | 83601-MN5-000 | GROMMET, SIDE COVER | - | - | 1 | 1 | | |
| 30 | 84706-415-000 | COLLAR | - | - | 2 | 2 | | |
| 31 | 90001-MG1-000 | SCREW, SPECIAL, 5X16 | - | - | 2 | 2 | | |
| 32 | 90103-MCF-D60 | BOLT, FLANGE, 8X35 | - | - | 1 | - | -------- -------- | BR,F,KO,MX,U |
| | | | - | - | 1 | - | -------- 6M214678 | E,ED,EK |
| | 90103-KCM-620 | | - | - | 1 | - | 6M214679 -------- | E,ED,EK |
| | | | - | - | - | 1 | | |
| 33 | 90106-MEL-000 | BOLT, SPECIAL, 4X8 | - | - | 2 | 2 | | |
| 34 | 90111-KW3-003 | NUT, COWL SETTING, 5MM | - | - | 2 | 2 | | |
| 35 | 90114-MEL-000 | SCREW, SPECIAL, 5X11 | - | - | 1 | 1 | | |
| 36 | 90115-MEL-000 | SCREW, PAN, 5X15 | - | - | 1 | 1 | | |
| 37 | 90118-MBV-000 | SCREW, PAN, 6X14 | - | - | 1 | 1 | | |
| 38 | 90118-MEL-000 | SCREW, PAN, 6X20 | - | - | 1 | 1 | | |
| 39 | 90201-MBB-000 | CUSHION, EX. PIPE MOUNTING | - | - | 2 | 2 | | |
| 40 | 90202-MBB-000 | COLLAR, 8X18 | - | - | 2 | 2 | | |
| 41 | 90304-MM5-000 | NUT, FLANGE, 7MM | - | - | 8 | 8 | | |
| 42 | 90439-MB0-000 | WASHER, RR. COVER GROMMET | - | - | 1 | 1 | | |
| 43 | 90501-MEL-D20 | WASHER, SPECIAL, 8.5 | - | - | 1 | 1 | | |

# EXHAUST MUFFLER (CBR1000RR6/7)



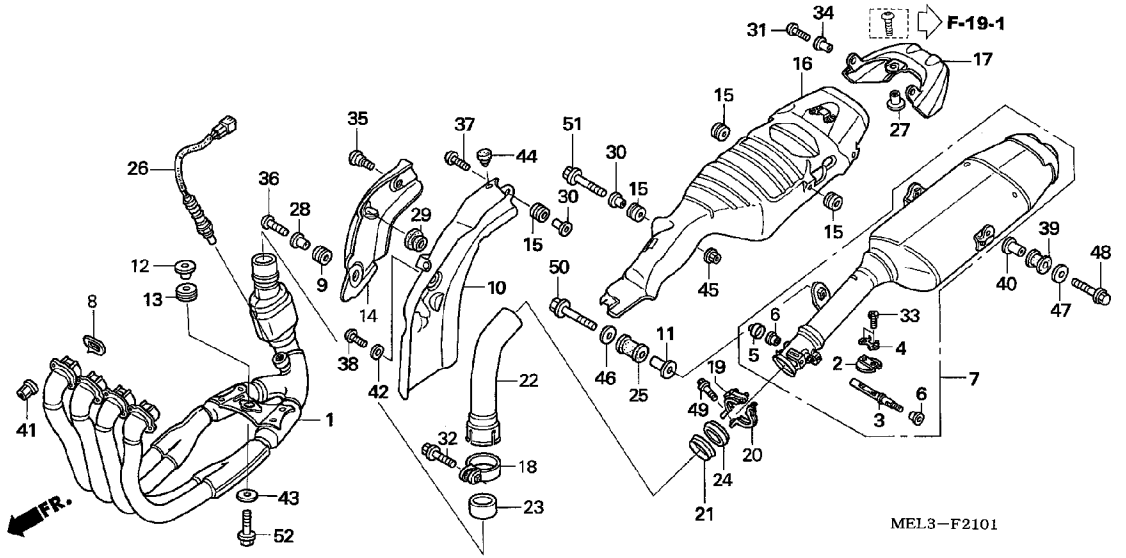


| Ref. No. | Part No. | Description | Reqd. QTY CBR1000RR 4 | 5 | 6 | 7 | Serial No. | Parts catalogue code |
|---|---|---|---|---|---|---|---|---|
| 44 | 90572-MEL-000 | RUBBER, PROTECTOR ---------- | - | - | 1 | 1 | | |
| 45 | 94050-06000 | NUT, FLANGE, 6MM ---------- | - | - | 1 | 1 | | |
| 46 | 94103-06000 | WASHER, PLAIN, 6MM ---------- | - | - | 1 | 1 | | |
| 47 | 94103-08000 | WASHER, PLAIN, 8MM ---------- | - | - | 2 | 2 | | |
| 48 | 95801-08030-00 | BOLT, FLANGE, 8X30 ---------- | - | - | 2 | 2 | | |
| 49 | 96001-06020-02 | BOLT, FLANGE, 6X20 ---------- | - | - | 1 | - | -------- -------- | F |
| | | | - | - | 1 | - | -------- 6M200081 | KO |
| | | | - | - | 1 | - | -------- 6M200626 | U |
| | | | - | - | 1 | - | -------- 6M200662 | BR,MX |
| | | | - | - | 1 | - | -------- 6M214531 | E,ED,EK |
| | 96001-06020-05 | ---------- | - | - | 1 | - | 6M200082 -------- | KO |
| | | | - | - | 1 | - | 6M200627 -------- | U |
| | | | - | - | 1 | - | 6M200663 -------- | BR,MX |
| | | | - | - | 1 | - | 6M214532 -------- | E,ED,EK |
| | | | - | - | - | 1 | | |
| 50 | 96001-06035-00 | BOLT, FLANGE, 6X35 ---------- | - | - | 1 | 1 | | |
| 51 | 96300-06035-00 | BOLT, FLANGE, 6X35 ---------- | - | - | 1 | 1 | | |
| 52 | 96400-08032-00 | BOLT, FLANGE, 8X32 ---------- | - | - | 1 | 1 | | |

# PEDAL



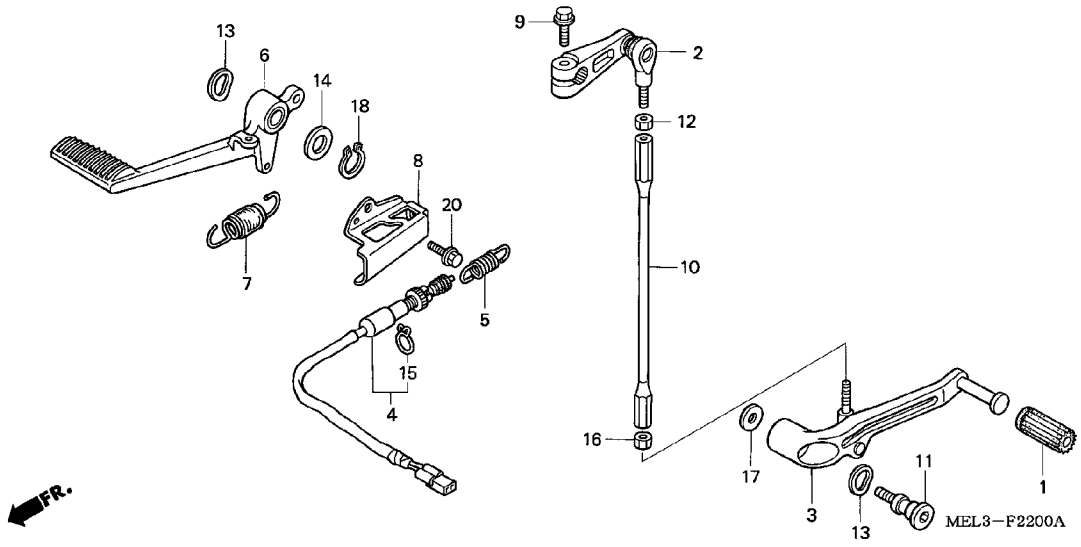


| Ref. No. | L.O.N. | (Relative ref. Number) Description | F.R.T. |
|---|---|---|---|
| 2 | | (10) | |
| | 4101A2 | ARM, GEAR CHANGE ---------- | 0.1 |
| 3 | | (10) | |
| | 4101A1 | PEDAL, GEAR CHANGE ---------- | 0.1 |
| 4 | 6151B5 | SWITCH, REAR STOP :PEDAL SIDE | 0.5 |
| 6 | 810160 | PEDAL, REAR BRAKE ---------- | 0.2 |

| Ref. No. | Part No. | Description | Reqd. QTY CBR1000RR 4 | 5 | 6 | 7 | Serial No. | Parts catalogue code |
|---|---|---|---|---|---|---|---|---|
| 1 | 24705-MR7-000 | RUBBER, GEAR CHANGE PEDAL --- | 1 | 1 | 1 | 1 | | |
| 2 | 24710-MEE-000 | ARM COMP., GEAR CHANGE ------ | 1 | 1 | 1 | 1 | | |
| 3 | 24720-MEL-000 | PEDAL COMP., GEAR CHANGE ---- | 1 | 1 | 1 | 1 | | |
| 4 | 35350-MEL-000 | SWITCH ASSY., RR. STOP ------ | 1 | 1 | - | - | | |
| | 35350-MEL-D20 | ---------- | - | - | 1 | 1 | | |
| 5 | 35357-KY1-000 | SPRING, STOP SWITCH --------- | 1 | 1 | 1 | 1 | | |
| 6 | 46500-MEL-000 | PEDAL COMP., RR. BRAKE ------ | 1 | 1 | 1 | 1 | | |
| 7 | 46515-MV9-000 | SPRING ASSY., BRAKE PEDAL --- | 1 | 1 | 1 | 1 | | |
| 8 | 50602-MEL-000 | STAY, STOP SWITCH ---------- | 1 | 1 | 1 | 1 | | |
| 9 | 90010-ML0-720 | BOLT, FLANGE, 6X20 ---------- | 1 | 1 | 1 | 1 | | |
| 10 | 90065-MEL-000 | BAR, CHANGE ---------- | 1 | 1 | 1 | 1 | | |
| 11 | 90113-MCF-000 | BOLT, CHANGE PIVOT ---------- | 1 | 1 | 1 | 1 | | |
| 12 | 90201-700-000 | NUT, GOVERNOR ARM FIXING ---- | 1 | 1 | 1 | 1 | | |
| 13 | 90505-MBW-000 | WASHER, CHANGE PEDAL WAVE --- | 2 | 2 | 2 | 2 | | |
| 14 | 90557-230-000 | WASHER, 15.2X25 ---------- | 1 | 1 | 1 | 1 | | |
| 15 | 90601-KAF-003 | CLIP, SWITCH COVER ---------- | 1 | 1 | 1 | 1 | | |
| 16 | 94001-06020-0S | NUT, HEX., 6MM ---------- | 1 | 1 | 1 | 1 | | |
| 17 | 94103-08700 | WASHER, PLAIN, 8MM ---------- | 1 | 1 | 1 | 1 | | |
| 18 | 94511-15000 | CIRCLIP, EXTERNAL, 15MM ----- | 1 | 1 | 1 | 1 | | |
| 20 | 96001-06010-07 | BOLT, FLANGE, 6X10 ---------- | 1 | 1 | 1 | 1 | | |

# STEP



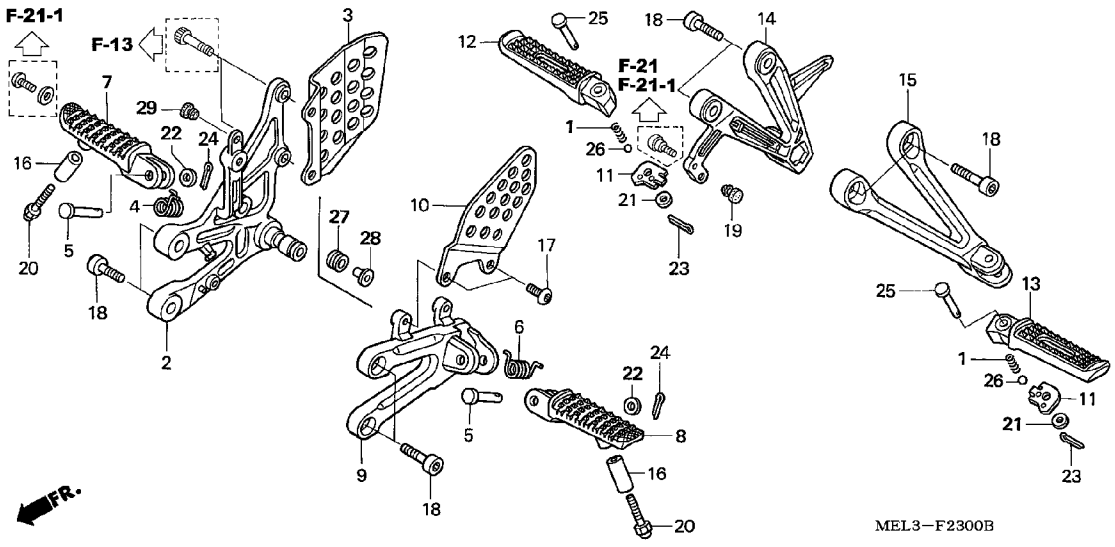


| Ref. No. | L.O.N. | (Relative ref. Number) Description | F.R.T. |
|---|---|---|---|
| 2 | 4101N2 | HOLDER, STEP :RIGHT ····· | 0.3 |
| | 4101N6 | HOLDER, STEP :BOTH ····· | 0.5 |
| 3 | | (10) | |
| | 4101A0 | GUARD, STEP ····· | 0.1 |
| | | .NOTE: Same time for two units | |
| 7 | 4101C6 | BAR, MAIN STEP :RIGHT ····· | 0.1 |
| | 4101J1 | BAR, MAIN STEP :BOTH ····· | 0.2 |
| 8 | 4101C5 | BAR, MAIN STEP :LEFT ····· | 0.1 |
| | 4101J1 | BAR, MAIN STEP :BOTH ····· | 0.2 |
| 9 | 4101N1 | HOLDER, STEP :LEFT ····· | 0.2 |
| | 4101N6 | HOLDER, STEP :BOTH ····· | 0.5 |
| 12 | 4101C8 | BAR, PILLION STEP :RIGHT ····· | 0.1 |
| | 4101P4 | BAR, PILLION STEP :BOTH ····· | 0.2 |
| 13 | 4101C7 | BAR, PILLION STEP :LEFT ····· | 0.1 |
| | 4101P4 | BAR, PILLION STEP :BOTH ····· | 0.2 |
| 14 | 4101D0 | BRACKET, PILLION STEP :RIGHT · | 0.2 |
| | 4101K4 | BRACKET, PILLION STEP :BOTH ·· | 0.3 |
| 15 | 4101C9 | BRACKET, PILLION STEP :LEFT ·· | 0.1 |
| | 4101K4 | BRACKET, PILLION STEP :BOTH ·· | 0.3 |

| Ref. No. | Part No. | Description | Reqd. QTY CBR1000RR 4 | 5 | 6 | 7 | Serial No. | Parts catalogue code |
|---|---|---|---|---|---|---|---|---|
| 1 | 28333-300-000 | SPRING, KICK STARTER STOPPER | 2 | 2 | 2 | 2 | | |
| 2 | 50600-MEL-000 | HOLDER, R. MAIN STEP ····· | 1 | 1 | - | - | | |
| | 50600-MEL-D20 | ····· | - | - | 1 | 1 | | |
| 3 | 50607-MEL-000 | GUARD, R. STEP ····· | 1 | 1 | 1 | 1 | | |
| 4 | 50617-MCJ-750 | SPRING, R. STEP RETURN ····· | 1 | 1 | 1 | 1 | | |
| 5 | 50639-ML0-010 | PIN, STEP BAR ····· | 2 | 2 | 2 | 2 | | |
| 6 | 50644-MCJ-750 | SPRING, L. STEP RETURN ····· | 1 | 1 | 1 | 1 | | |
| 7 | 50660-MEL-000 | ARM, R. MAIN STEP ····· | 1 | 1 | 1 | 1 | | |
| 8 | 50665-MEL-000 | ARM, L. MAIN STEP ····· | 1 | 1 | 1 | 1 | | |
| 9 | 50700-MEL-000 | HOLDER, L. MAIN STEP ····· | 1 | 1 | 1 | 1 | | |
| 10 | 50707-MCJ-000 | GUARD, L. STEP ····· | 1 | 1 | 1 | 1 | | |
| 11 | 50718-KT7-761 | PLATE, PILLION STEP CLICK ··· | 2 | 2 | - | - | | |
| | 50718-MEE-D00 | ····· | - | - | 2 | 2 | | |
| 12 | 50720-MEL-010 | ARM, R. PILLION STEP ····· | 1 | - | - | - | | |
| | 50720-MEL-D00 | ····· | - | 1 | 1 | 1 | | |
| 13 | 50730-MEL-010 | ARM, L. PILLION STEP ····· | 1 | - | - | - | | |
| | 50730-MEL-D00 | ····· | - | 1 | 1 | 1 | | |
| 14 | 50750-MEL-000 | HOLDER, R. PILLION STEP ····· | 1 | 1 | 1 | 1 | | |
| 15 | 50760-MEL-000 | HOLDER, L. PILLION STEP ····· | 1 | 1 | 1 | 1 | | |
| 16 | 51486-MEL-000 | COLLAR, STEP LOWER ····· | 2 | 2 | 2 | 2 | | |
| 17 | 90118-MR1-000 | SCREW, PAN, 6X14 ····· | 2 | 2 | 2 | 2 | | |
| 18 | 90157-ME9-000 | BOLT, SOCKET, 8X22 ····· | 8 | 8 | 8 | 8 | | |
| 19 | 90572-MEL-000 | RUBBER, PROTECTOR ····· | 1 | 1 | 1 | 1 | | |
| 20 | 92501-06050-0A | BOLT, CAP, 6X50 ····· | 2 | 2 | 2 | 2 | | |
| 21 | 94101-06000 | WASHER, PLAIN, 6MM ····· | 2 | 2 | 2 | 2 | | |

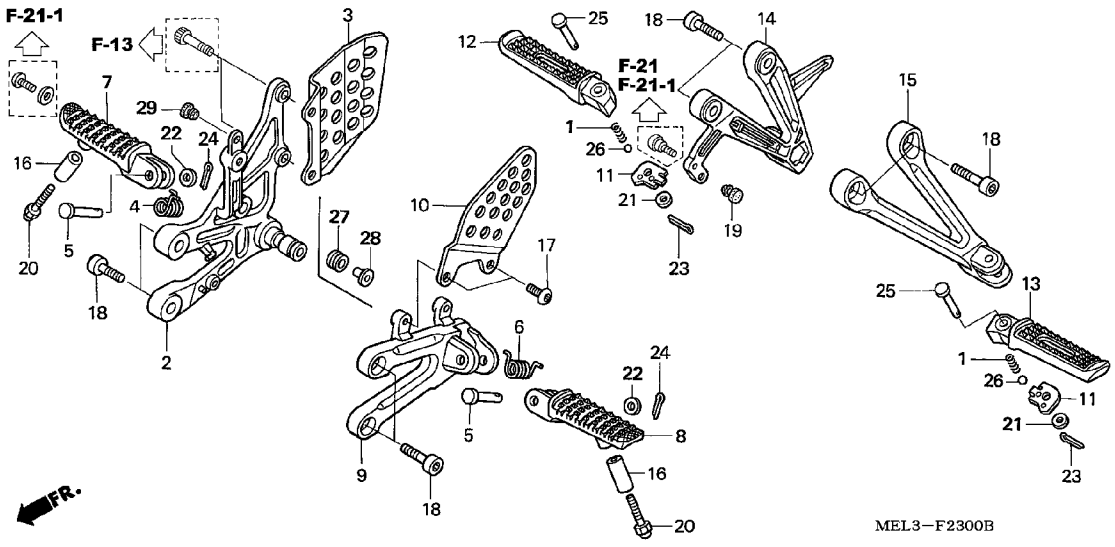


| Ref. No. | Part No. | Description | Reqd. QTY CBR1000RR 4 | 5 | 6 | 7 | Serial No. | Parts catalogue code |
|---|---|---|---|---|---|---|---|---|
| 22 | 94102-08000 | WASHER, PLAIN, 8MM ..... | 2 | 2 | 2 | 2 | | |
| 23 | 94201-16120 | PIN, SPLIT, 1.6X12 ..... | 2 | 2 | 2 | 2 | | |
| 24 | 94201-20150 | PIN, SPLIT, 2.0X15 ..... | 2 | 2 | 2 | 2 | | |
| 25 | 95015-83000 | PIN C, PILLION STEP ..... | 2 | 2 | 2 | 2 | | |
| 26 | 96211-08000 | BALL, STEEL, #8 (1/4) ..... | 2 | 2 | 2 | 2 | | |
| 27 | 19639-GBL-000 | RUBBER, MOUNTING ..... | - | - | 1 | 1 | | |
| 28 | 33712-GC6-000 | COLLAR, TAILLIGHT ..... | - | - | 1 | 1 | | |
| 29 | 90572-MEL-000 | RUBBER, PROTECTOR ..... | 1 | 1 | - | - | | |
| | 50631-MEL-D20 | RUBBER, STEP HOLDER ..... | - | - | 1 | 1 | | |

# STAND

L11

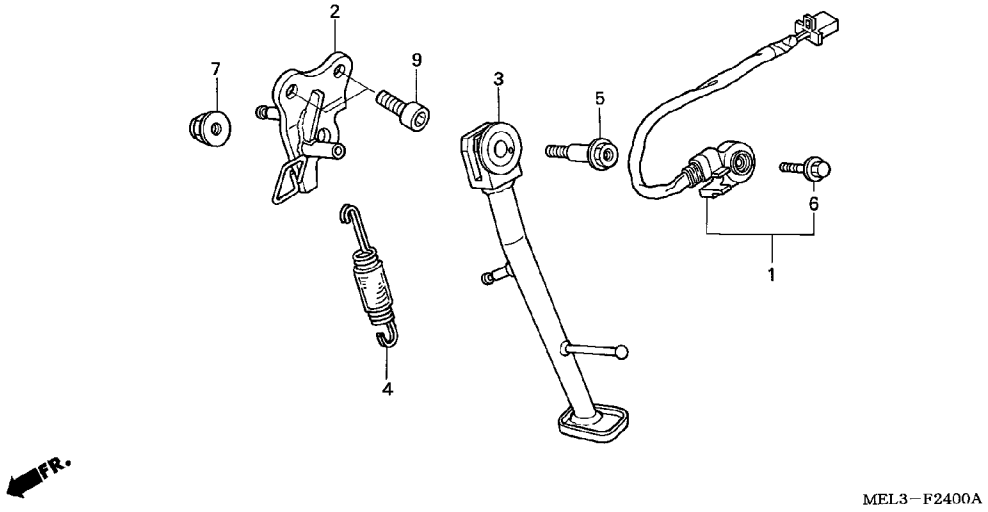


| Ref. No. | L.O.N. | (Relative ref. Number) Description | F.R.T. |
|---|---|---|---|
| 1 | 615195 | SWITCH, SIDE STAND | 0.3 |
| | 615195A | .'06 model add | 0.1 |
| | 615195B | .'07 model add | 0.1 |
| 2 | 410181 | BRACKET, SIDE STAND | 0.3 |
| 3 | 410180 | BAR, SIDE STAND | 0.2 |
| 4 | 410182 | SPRING, SIDE STAND | 0.1 |

| Ref. No. | Part No. | Description | Reqd. QTY CBR1000RR 4 | 5 | 6 | 7 | Serial No. | | Parts catalogue code |
|---|---|---|---|---|---|---|---|---|---|
| 1 | 35070-MEL-000 | SWITCH SET, SIDE STAND | 1 | - | - | - | -------- | -------- | BR,F,G,KO,MX,U |
| | 35070-MEL-010 | | 1 | - | - | - | -------- | -------- | E,ED |
| | | | - | 1 | - | - | | | |
| | 35070-MEL-305 | | - | - | 1 | 1 | | | |
| 2 | 50150-MEL-000 | BRACKET COMP., SIDE STAND | 1 | - | - | - | -------- | -------- | BR,F,G,KO,MX,U |
| | 50150-MEL-010 | | 1 | - | - | - | -------- | -------- | E,ED |
| | | | - | 1 | 1 | 1 | | | |
| 3 | 50530-MEL-000 | BAR COMP., SIDE STAND | 1 | 1 | 1 | 1 | | | |
| 4 | 50540-MBB-000 | SPRING ASSY., SIDE STAND | 1 | 1 | 1 | 1 | | | |
| 5 | 90108-MK6-670 | BOLT, SIDE STAND PIVOT | 1 | 1 | 1 | 1 | | | |
| 6 | 90147-MCE-950 | BOLT, SPECIAL, 6X16 | 1 | 1 | 1 | 1 | | | |
| 7 | 90203-MF9-710 | NUT, SIDE STAND | 1 | 1 | 1 | 1 | | | |
| 9 | 96600-10028-07 | BOLT, SOCKET, 10X28 | 2 | 2 | 2 | 2 | | | |

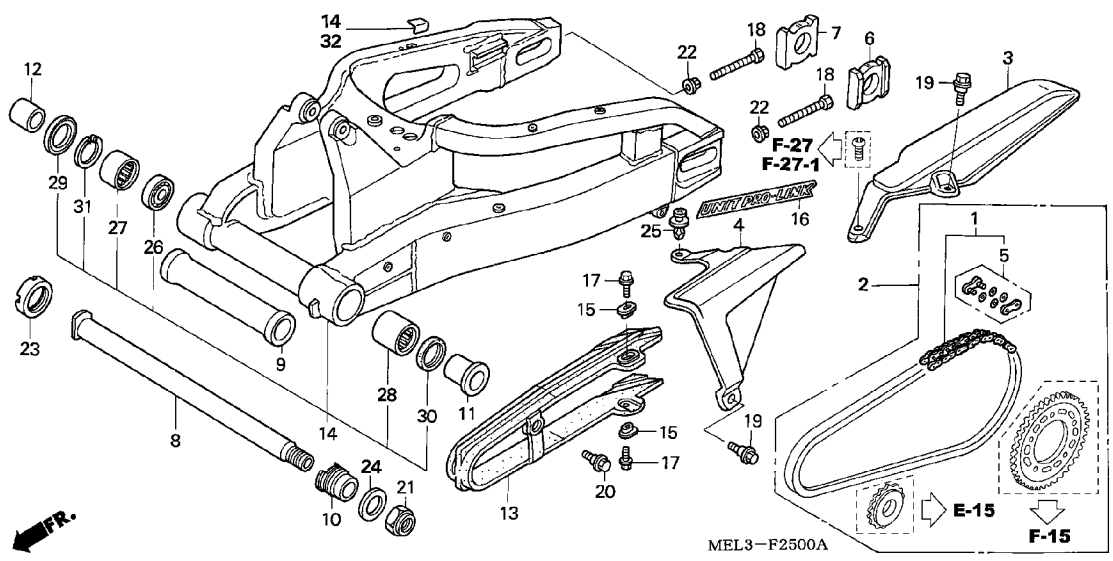


| Ref. No. | L.O.N. | (Relative ref. Number) Description | F.R.T. |
|---|---|---|---|
| 1 | 213165 | CHAIN, DRIVE ---------- | 0.5 |
| 2 | 2131G4 | CHAIN KIT, DRIVE ---------- | 1.3 |
| 3 | 4101J5 | CASE, DRIVE CHAIN :REAR ------ | 0.1 |
| | 4101P7 | CASE, DRIVE CHAIN :BOTH ------ | 0.2 |
| 4 | 4101J4 | CASE, DRIVE CHAIN :FRONT ----- | 0.2 |
| | 4101P7 | CASE, DRIVE CHAIN :BOTH ------ | 0.2 |
| 13 | 4101E5 | SLIDER, CHAIN ---------- | 0.6 |
| 14 | 5121B0 | SWINGARM ASSEMBLY ---------- | 1.9 |
| 27 | | (9,26) | |
| | 5121C9 | BEARING, SWINGARM PIVOT :RIGHT | 1.6 |
| | | .NOTE: Same time for two units | |
| | 5121D0 | BEARING, SWINGARM PIVOT :BOTH | 1.8 |
| 28 | 5121C8 | BEARING, SWINGARM PIVOT :LEFT | 1.8 |
| | 5121D0 | BEARING, SWINGARM PIVOT :BOTH | 1.8 |

| Ref. No. | Part No. | Description | Reqd. QTY CBR1000RR 4 | 5 | 6 | 7 | Serial No. | Parts catalogue code |
|---|---|---|---|---|---|---|---|---|
| 1 | 06405-MEL-003 | CHAIN SET, DRIVE (DID50VM2-120L) | | | | | | |
| | | (STANDARD LINK 114L) | 1 | 1 | 1 | - | | |
| | | | - | - | - | 1 | -------- -------- | BR,E,ED,EK,F,KO,MX,U |
| | 06405-MEL-005 | CHAIN SET, DRIVE (RK50GF0Z1-120L) | | | | | | |
| | | (STANDARD LINK 114L) | 1 | 1 | 1 | - | | |
| | | | - | - | - | 1 | -------- -------- | BR,E,ED,EK,F,KO,MX,U |
| | 06405-MEL-P00 | CHAIN SET, DRIVE (DID50VM2-120L) | | | | | | |
| | | (STANDARD LINK 114L) | - | - | - | 1 | -------- -------- | 2ED,2F,3E,4EK |
| | 06405-MEL-P10 | CHAIN SET, DRIVE (RK50GF0-120L) | | | | | | |
| | | (STANDARD LINK 114L) | - | - | - | 1 | -------- -------- | 2ED,2F,3E,4EK |
| 2 | 06406-MEL-000 | CHAIN KIT, DRIVE (50-16/40T) | 1 | 1 | - | - | -------- -------- | E,ED,EK,F,G,2ED,2F,2G,3E,4EK |
| | 06406-MEL-D20 | CHAIN KIT, DRIVE (50-16/42T) | - | - | 1 | 1 | -------- -------- | E,ED,EK,F |
| | 06406-MEL-D40 | ---------- | - | - | - | 1 | -------- -------- | 2ED,2F,3E,4EK |
| 3 | 40510-MEL-000 | CASE A, DRIVE CHAIN --------- | 1 | 1 | 1 | 1 | | |
| 4 | 40520-MEL-000 | CASE B, DRIVE CHAIN --------- | 1 | 1 | 1 | 1 | | |
| 5 | 40545-MEL-003 | JOINT, DRIVE CHAIN (ZJ)(DAIDO) | 1 | 1 | 1 | - | | |
| | | | - | - | - | 1 | -------- -------- | BR,E,ED,EK,F,KO,MX,U |
| | 40545-MEL-005 | JOINT, DRIVE CHAIN (RK EXCEL) | 1 | 1 | 1 | - | | |
| | | | - | - | - | 1 | -------- -------- | BR,E,ED,EK,F,KO,MX,U |
| | 40541-MEL-D41 | JOINT, DRIVE CHAIN (DAIDO) -- | - | - | - | 1 | -------- -------- | 2ED,2F,3E,4EK |
| | 40541-MEL-D42 | JOINT, DRIVE CHAIN (RK EXCEL) | - | - | - | 1 | -------- -------- | 2ED,2F,3E,4EK |
| 6 | 42305-MEL-000 | COLLAR, L. RR. AXLE --------- | 1 | 1 | - | - | | |
| | 42305-MEL-D20 | ---------- | - | - | 1 | 1 | | |
| 7 | 42306-MEL-000 | COLLAR, R. RR. AXLE --------- | 1 | 1 | - | - | | |

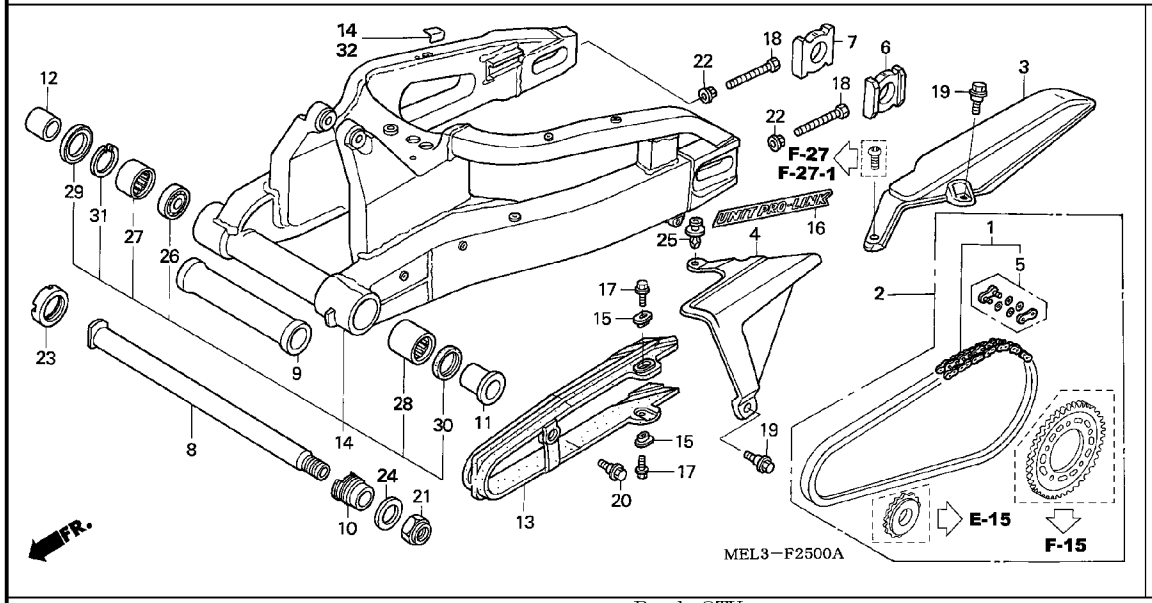


| Ref. No. | Part No. | Description | Reqd. QTY CBR1000RR 4 | 5 | 6 | 7 | Serial No. | Parts catalogue code |
|---|---|---|---|---|---|---|---|---|
| (7) | 42306-MEE-D00 | COLLAR, R. RR. AXLE | - | - | 1 | 1 | | |
| 8 | 52101-MEL-000 | BOLT, SWINGARM PIVOT | 1 | 1 | - | - | | |
| | 52101-MEL-670 | | - | - | 1 | 1 | | |
| 9 | 52102-MEL-000 | COLLAR, RR. SWINGARM PIVOT DISTANCE | 1 | 1 | 1 | 1 | | |
| 10 | 52108-MEL-000 | BOLT, R. PIVOT ADJUSTING | 1 | 1 | 1 | 1 | | |
| 11 | 52143-MEL-000 | COLLAR, L. PIVOT DISTANCE | 1 | 1 | 1 | 1 | | |
| 12 | 52144-MEL-000 | COLLAR, R. PIVOT DISTANCE | 1 | 1 | 1 | 1 | | |
| 13 | 52170-MEL-000 | SLIDER, CHAIN | 1 | 1 | 1 | 1 | | |
| 14 | 52200-MEL-000 | SWINGARM SUB ASSY. | 1 | 1 | - | - | | |
| | 52200-MEL-A20 | | - | - | 1 | - | -------- -------- | MX,U |
| | 52200-MEL-D21 | | - | - | 1 | - | -------- -------- | BR,E,ED,EK,F,KO |
| | 52200-MEL-D30 | | - | - | - | 1 | -------- -------- | BR,E,ED,EK,F,KO,MX,U |
| | 52200-MEL-D40 | | - | - | - | 1 | -------- -------- | 2ED,2F,3E,4EK |
| 15 | 81312-GJ5-000 | COLLAR | 2 | 2 | 2 | 2 | | |
| 16 | 87121-MEE-000 | MARK (UNIT PROLINK) | 2 | 2 | - | - | | |
| | | | - | - | 2 | - | -------- -------- | MX,U |
| | | | - | - | - | 2 | -------- -------- | 2ED,2F,3E,4EK |
| | 87121-MEL-D20 | | - | - | 2 | 2 | -------- -------- | BR,E,ED,EK,F,KO |
| | | | - | - | - | 2 | -------- -------- | MX,U |
| 17 | 90105-MY9-000 | BOLT, FLANGE, 6X18 | 2 | 2 | 2 | 2 | | |
| 18 | 90106-MCJ-000 | BOLT, HEX., 8X50 | 2 | 2 | - | - | | |
| | 90106-MEL-D20 | | - | - | 2 | 2 | | |
| 19 | 90113-MAS-E00 | BOLT, FLANGE, 6MM | 2 | 2 | 2 | 2 | | |
| 20 | 90130-MCJ-750 | BOLT, CHAIN SLIDER | 1 | 1 | 1 | 1 | | |
| 21 | 90305-MCF-D00 | NUT, U, 22MM | 1 | 1 | 1 | 1 | | |

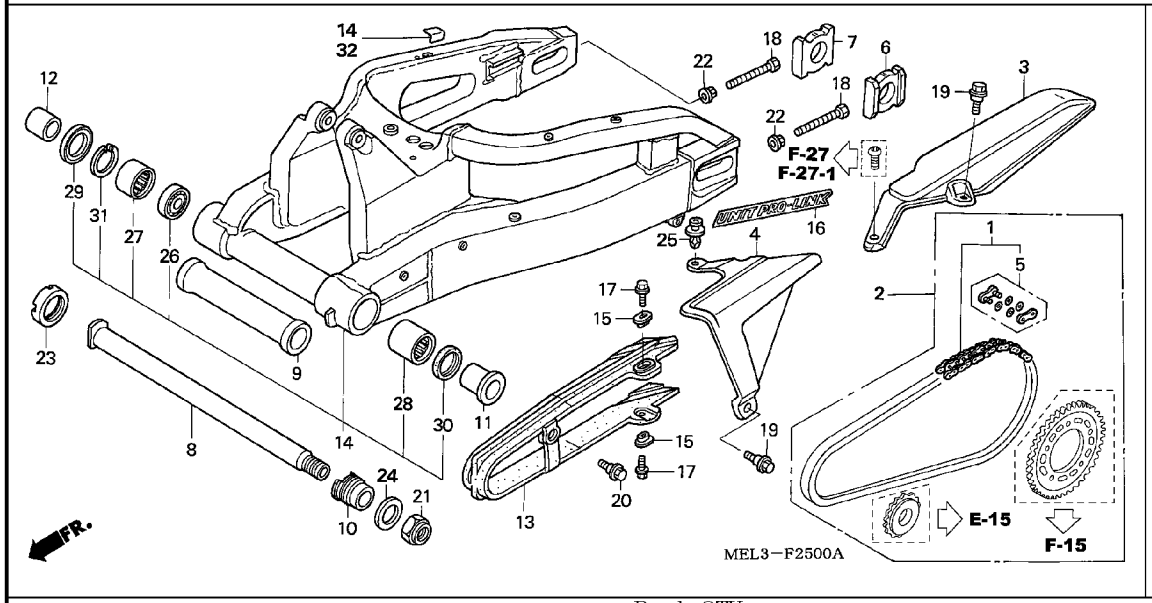


| Ref. No. | Part No. | Description | Reqd. QTY CBR1000RR 4 | 5 | 6 | 7 | Serial No. | Parts catalogue code |
|---|---|---|---|---|---|---|---|---|
| 22 | 90309-357-000 | NUT, HEX., 8MM ..... | 2 | 2 | 2 | 2 | | |
| 23 | 90354-MCF-D00 | NUT, LOCK, 36MM ..... | 1 | 1 | 1 | 1 | | |
| 24 | 90401-MCJ-000 | WASHER, 23X37X2.5 ..... | 1 | 1 | 1 | 1 | | |
| 25 | 90683-GR1-003 | CLIP, BODY COVER ..... | 1 | 1 | 1 | 1 | | |
| 26 | 91053-MCJ-003 | BEARING, RADIAL BALL, 6905 .. | 1 | 1 | 1 | 1 | | |
| 27 | 91053-MCJ-751 | BEARING, NEEDLE, 32X42X20 ... | 1 | 1 | 1 | 1 | | |
| 28 | 91071-MCJ-003 | BEARING, NEEDLE, 32X42X37 ... | 1 | 1 | 1 | 1 | | |
| 29 | 91252-MCF-003 | DUST SEAL, 32X45X5 ..... | 1 | 1 | 1 | 1 | | |
| 30 | 91253-MCF-003 | DUST SEAL, 32X42X6 ..... | 1 | 1 | 1 | 1 | | |
| 31 | 94520-45000 | CIRCLIP, INTERNAL, 45MM ..... | 1 | 1 | 1 | 1 | | |
| 32 | 17528-MR4-900 | TAPE, TANK GUARD ..... | - | - | 1 | 1 | -------- -------- | BR,E,ED,EK,F,KO |
| | | | - | - | - | 1 | -------- -------- | MX,U |

# REAR CUSHION



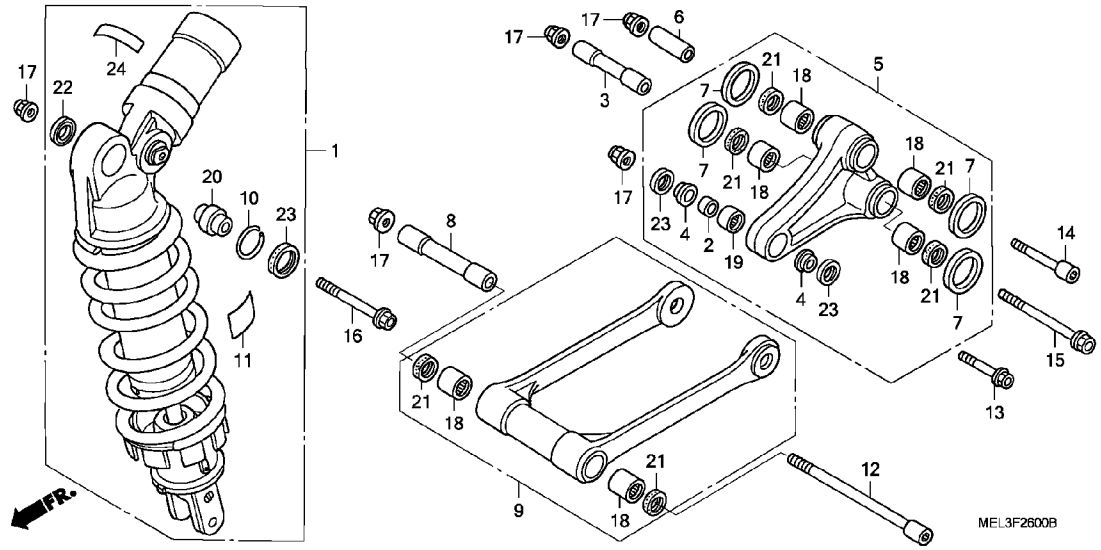


| Ref. No. | L.O.N. | (Relative ref. Number) Description | F.R.T. |
|---|---|---|---|
| 1 | 512115 | CUSHION ASSY., REAR ..... | 0.6 |
| 5 | | (3,6) | |
| | 512140 | ARM, CUSHION ..... | 0.5 |
| 9 | | (8) | |
| | 512145 | ROD, CUSHION CONNECTING ..... | 0.4 |
| 18 | | (19) | |
| | 5121D4 | BEARING, CUSHION CONNECTING ROD ..... | 0.6 |
| | 5121D4A | .Replace 1 bearing add ..... | 0.1 |
| | 512146 | BEARING, CUSHION ARM ..... | 0.7 |
| | 5121D3 | BEARING, CUSHION ARM :FOR 1 VEHICLE ..... | 0.9 |
| 20 | 5121D1 | BEARING, REAR CUSHION ..... | 0.8 |

| Ref. No. | Part No. | Description | Reqd. QTY CBR1000RR 4 | 5 | 6 | 7 | Serial No. | | Parts catalogue code |
|---|---|---|---|---|---|---|---|---|---|
| 1 | 52400-MEL-003 | CUSHION ASSY., RR. ..... | 1 | 1 | - | - | -------- | -------- | BR,E,ED,EK,F,G,MX,U,2ED,2F,2G,2U,3E,4EK |
| | 52400-MEL-751 | ..... | 1 | 1 | - | - | -------- | -------- | KO,2KO |
| | 52400-MEL-D21 | ..... | - | - | 1 | 1 | -------- | -------- | BR,E,ED,EK,F,MX,U |
| | 52400-MEL-K21 | ..... | - | - | 1 | 1 | -------- | -------- | KO |
| | 52400-MEL-D41 | ..... | - | - | - | 1 | -------- | -------- | 2ED,2F,3E,4EK |
| 2 | 52463-KZ4-B00 | COLLAR D, CUSHION ..... | 1 | 1 | 1 | 1 | | | |
| 3 | 52463-MEE-000 | COLLAR, CUSHION ARM ..... | 1 | 1 | 1 | 1 | | | |
| 4 | 52464-MEE-000 | COLLAR, BEARING SIDE ..... | 2 | 2 | 2 | 2 | | | |
| 5 | 52465-MEL-000 | ARM SUB ASSY., CUSHION ..... | 1 | 1 | - | - | | | |
| | 52465-MEL-D20 | ..... | - | - | 1 | 1 | | | |
| 6 | 52466-MEE-000 | COLLAR A, CUSHION ARM ..... | 1 | 1 | 1 | 1 | | | |
| 7 | 52467-MEE-000 | WASHER, THRUST ..... | 4 | 4 | 4 | 4 | | | |
| 8 | 52472-MEL-000 | COLLAR, CONNECTING ROD PIVOT | 1 | 1 | 1 | 1 | | | |
| 9 | 52475-MEL-000 | ROD SUB ASSY., CUSHION CONNECTING | 1 | 1 | - | - | | | |
| | 52475-MEL-D20 | ..... | - | - | 1 | 1 | | | |
| 10 | 52487-KA4-831 | RING, STOPPER ..... | 1 | 1 | 1 | 1 | | | |
| 11 | 87516-KFK-750 | LABEL, RR. DAMPER CAUTION (KOREAN) | 1 | 1 | 1 | 1 | -------- | -------- | KO,2KO |
| | 87516-MBZ-G01 | LABEL, RR. DAMPER ..... | - | - | 1 | 1 | -------- | -------- | BR,E,ED,EK,F,MX,U,2ED,2F,3E,4EK |
| 12 | 90107-MEE-000 | BOLT, SOCKET, 10X136 ..... | 1 | 1 | 1 | 1 | | | |
| 13 | 90107-MR8-000 | BOLT, FLANGE, 10X57 ..... | 1 | 1 | 1 | 1 | | | |
| 14 | 90111-KV3-700 | BOLT, SOCKET, 10X80 ..... | 1 | 1 | 1 | 1 | | | |
| 15 | 90115-MR7-003 | BOLT, FLANGE, 10X113 ..... | 1 | 1 | 1 | 1 | | | |
| 16 | 90132-MEL-000 | BOLT, FLANGE, 10X75 ..... | 1 | 1 | 1 | 1 | | | |
| 17 | 90304-GE8-003 | NUT, U, 10MM ..... | 5 | 5 | 5 | 5 | | | |

# REAR CUSHION



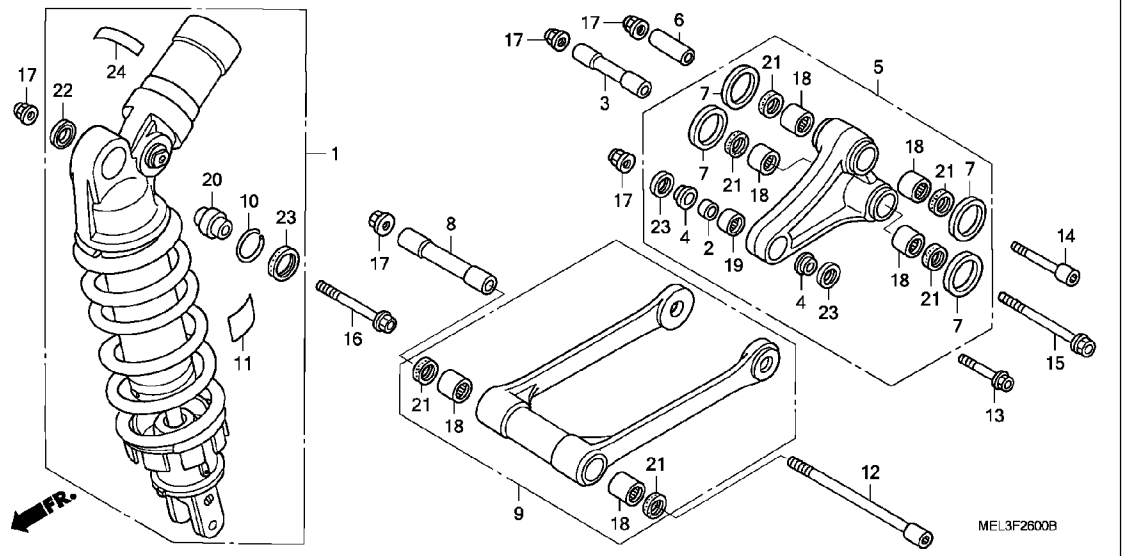


| Ref. No. | Part No. | Description | Reqd. QTY CBR1000RR 4 | 5 | 6 | 7 | Serial No. | Parts catalogue code |
|---|---|---|---|---|---|---|---|---|
| 18 | 91071-MY1-005 | BEARING, NEEDLE, 17X24X17 (KOYO) | 6 | 6 | 6 | 6 | | |
| 19 | 91074-KZ4-B01 | BEARING, NEEDLE, 19X26X15 ··· | 1 | 1 | 1 | 1 | | |
| 20 | 91074-MBR-722 | BEARING, SPHERICAL, 10 ····· | 1 | 1 | 1 | 1 | | |
| 21 | 91262-KV3-831 | DUST SEAL, 17X24X5(ARAI) ···· | 6 | 6 | 6 | 6 | | |
| 22 | 91351-KZ3-731 | DUST SEAL, RR. CUSHION PIVOT | 1 | 1 | 1 | 1 | | |
| 23 | 91351-MAC-671 | DUST SEAL, 16X26X3 ····· | 3 | 3 | 3 | 3 | | |
| 24 | 52497-MEE-003 | MARK, SHOWA ····· | - | - | - | 1 | -------- -------- | 2ED,2F,3E,4EK |

# REAR FENDER (CBR1000RR4/5)



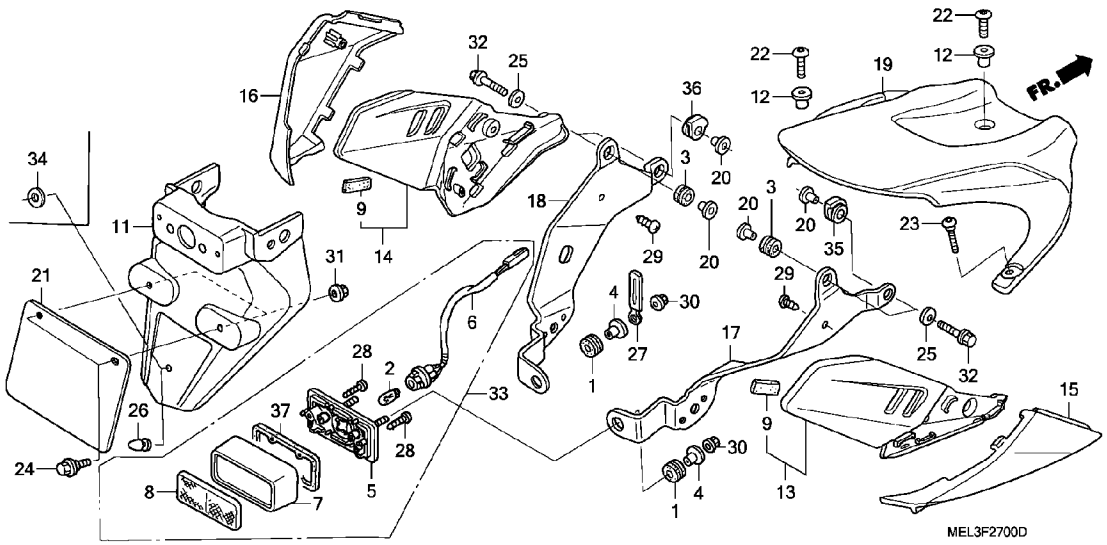


| Ref. No. | L.O.N. | (Relative ref. Number) Description | F.R.T. |
|---|---|---|---|
| 2 | 6161F3 | BULB, LICENSE LIGHT ---------- | 0.2 |
| 6 | 6161E9 | SOCKET, LICENSE LIGHT -------- | 0.3 |
| 11 | 413105 | FENDER A, REAR ---------- | 0.5 |
| 13 | | (15) | |
| | 4131L7 | GUARD, REAR HEAT :RIGHT ------ | 0.3 |
| | 4131R9 | GUARD, REAR HEAT :BOTH ------- | 0.3 |
| 14 | | (16) | |
| | 4131L8 | GUARD, REAR HEAT :LEFT ------- | 0.3 |
| | 4131R9 | GUARD, REAR HEAT :BOTH ------- | 0.3 |
| 17 | 4131C4 | STAY, REAR FENDER :RIGHT ----- | 0.4 |
| | 4131L9 | STAY, REAR FENDER :BOTH ------ | 0.5 |
| 18 | 4131C3 | STAY, REAR FENDER :LEFT ------ | 0.4 |
| | 4131L9 | STAY, REAR FENDER :BOTH ------ | 0.5 |
| 19 | 413111 | FENDER C, REAR ---------- | 0.2 |
| 33 | 6161D8 | LIGHT, LICENSE ---------- | 0.4 |

3

| Ref. No. | Part No. | Description | Reqd. QTY CBR1000RR 4 | 5 | 6 | 7 | Serial No. | Parts catalogue code |
|---|---|---|---|---|---|---|---|---|
| 1 | 17251-KE8-690 | GROMMET, AIR CLEANER CASE --- | 2 | 2 | - | - | | |
| 2 | 33301-SA0-741 | BULB (12V 5W)(STANLEY) ------ | 1 | 1 | - | - | | |
| 3 | 33712-KT1-670 | RUBBER, TAILLIGHT ---------- | 2 | - | - | - | | |
| | 80119-MEL-000 | RUBBER A, MOUNTING ---------- | - | 2 | - | - | | |
| 4 | 33719-437-970 | COLLAR, TAILLIGHT PACKING --- | 2 | - | - | - | | |
| | 80117-MEL-000 | COLLAR, LICENSE LIGHT ------- | - | 2 | - | - | | |
| 5 | 33721-MEL-000 | BASE COMP., LICENSE --------- | 1 | - | - | - | -------- -------- | BR,E,ED,F,G,MX,U |
| | 33721-MEE-003 | ---------- | 1 | - | - | - | -------- -------- | KO |
| | | | - | 1 | - | - | | |
| 6 | 33722-MEL-000 | SOCKET COMP., LICENSE ------- | 1 | 1 | - | - | | |
| 7 | 33723-MEL-000 | COVER COMP., LICENSE -------- | 1 | - | - | - | -------- -------- | BR,E,ED,F,G,MX,U |
| | 33723-MEE-003 | COVER COMP., LICENSE LIGHT -- | 1 | - | - | - | -------- -------- | KO |
| | | | - | 1 | - | - | | |
| 8 | 33741-MZ7-003 | REFLECTOR, REFLEX ---------- | 1 | 1 | - | - | | |
| 9 | 61703-HB3-300 | RUBBER, SUPPORT STAY SPACER - | 2 | 2 | - | - | | |
| 11 | 80100-MEE-000 | FENDER A, RR. ---------- | 1 | 1 | - | - | -------- -------- | BR,E,ED,EK,F,G,KO,MX,2ED,2F,2G,2KO,3E,4EK |
| | 80100-MEE-670 | ---------- | 1 | 1 | - | - | -------- -------- | U,2U |
| 12 | 80103-MCJ-750 | COLLAR, FENDER SETTING ------ | 2 | 2 | - | - | | |
| 13 | 80103-MEL-000 | GUARD, R. RR. HEAT ---------- | 1 | 1 | - | - | | |
| 14 | 80104-MEL-000 | GUARD, L. RR. HEAT ---------- | 1 | 1 | - | - | | |
| 15 | 80105-MEE-000 | COVER, R. FENDER A STAY ----- | 1 | 1 | - | - | | |
| 16 | 80106-MEE-000 | COVER, L. FENDER A STAY ----- | 1 | 1 | - | - | | |
| 17 | 80115-MEE-940 | STAY, R. FENDER A ---------- | 1 | 1 | - | - | | |
| 18 | 80116-MEE-940 | STAY, L. FENDER A ---------- | 1 | 1 | - | - | | |
| 19 | 80120-MEL-000 | FENDER C, RR. ---------- | 1 | 1 | - | - | | |
| 20 | 84706-163-670 | COLLAR, TAILLIGHT MOUNTING -- | 4 | - | - | - | | |
| | 52159-KB7-000 | COLLAR, CHAIN GUARD --------- | - | 4 | - | - | | |

# REAR FENDER (CBR1000RR4/5)



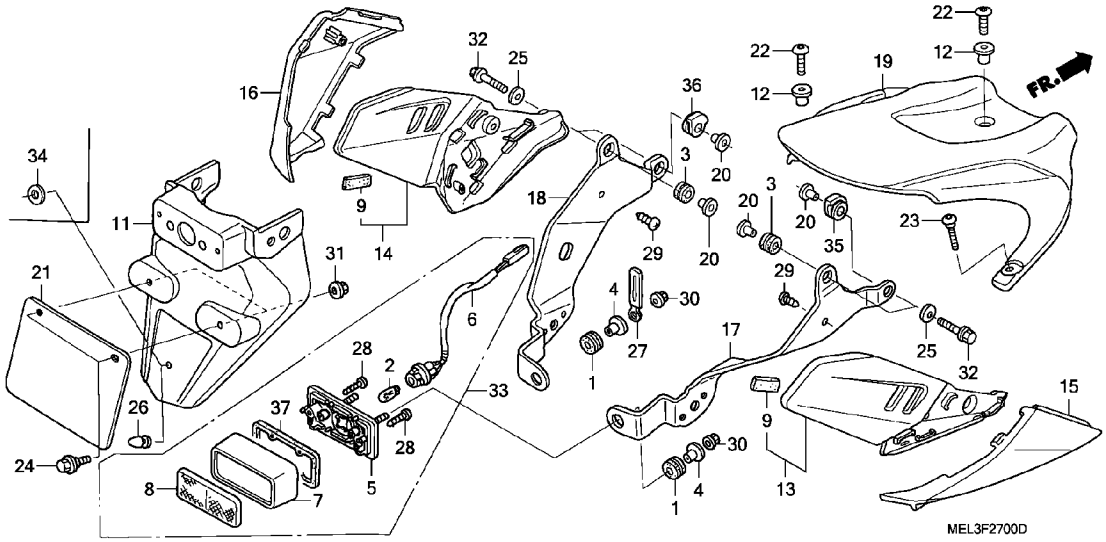


| Ref. No. | Part No. | Description | Reqd. QTY CBR1000RR 4 | 5 | 6 | 7 | Serial No. | Parts catalogue code |
|---|---|---|---|---|---|---|---|---|
| 21 | 84710-MEE-650 | PLATE, NUMBER PLATE BACK | 1 | 1 | - | - | -------- -------- | U,2U |
| 22 | 90103-MBG-000 | SCREW, PAN, 5X20 | 2 | 2 | - | - | | |
| 23 | 90108-MAT-000 | SCREW, PAN, 5X21 | 1 | 1 | - | - | | |
| 24 | 90122-752-000 | BOLT, SPECIAL, 6MM | 2 | 2 | - | - | -------- -------- | U,2U |
| 25 | 90525-428-900 | WASHER, PLAIN, 6MM | 4 | 4 | - | - | | |
| 26 | 90899-422-610 | PLUG, CONE TYPE | 1 | 1 | - | - | -------- -------- | BR,KO,MX,U,2KO,2U |
| 27 | 91410-679-000 | CLIP, 2X60 | 1 | 1 | - | - | | |
| 28 | 93901-34410 | SCREW, TAPPING, 4X16 | 2 | 2 | - | - | | |
| 29 | 93903-25280 | SCREW, TAPPING, 5X12 | 2 | 2 | - | - | | |
| 30 | 94050-05000 | NUT, FLANGE, 5MM | 2 | 2 | - | - | | |
| 31 | 94050-06070 | NUT, FLANGE, 6MM | 2 | 2 | - | - | -------- -------- | U,2U |
| 32 | 96001-06020-00 | BOLT, FLANGE, 6X20 | 4 | 4 | - | - | | |
| 33 | 33720-MEL-000 | LIGHT ASSY., LICENSE | 1 | 1 | - | - | | |
| 34 | 90581-GB5-610 | WASHER, PLAIN, 6MM | 1 | 1 | - | - | -------- -------- | E,ED,EK,F,G,2ED,2F,2G,3E,4EK |
| 35 | 33712-KT1-670 | RUBBER, TAILLIGHT | 1 | - | - | - | | |
| | 80121-MEL-000 | RUBBER, R. FENDER SETTING (A) | - | 1 | - | - | | |
| 36 | 33712-KT1-670 | RUBBER, TAILLIGHT | 1 | - | - | - | | |
| | 80122-MEL-000 | RUBBER, L. FENDER SETTING (A) | - | 1 | - | - | | |
| 37 | 33729-MEE-003 | PACKING, LENS | 1 | 1 | - | - | | |

# REAR FENDER (CBR1000RR6/7)



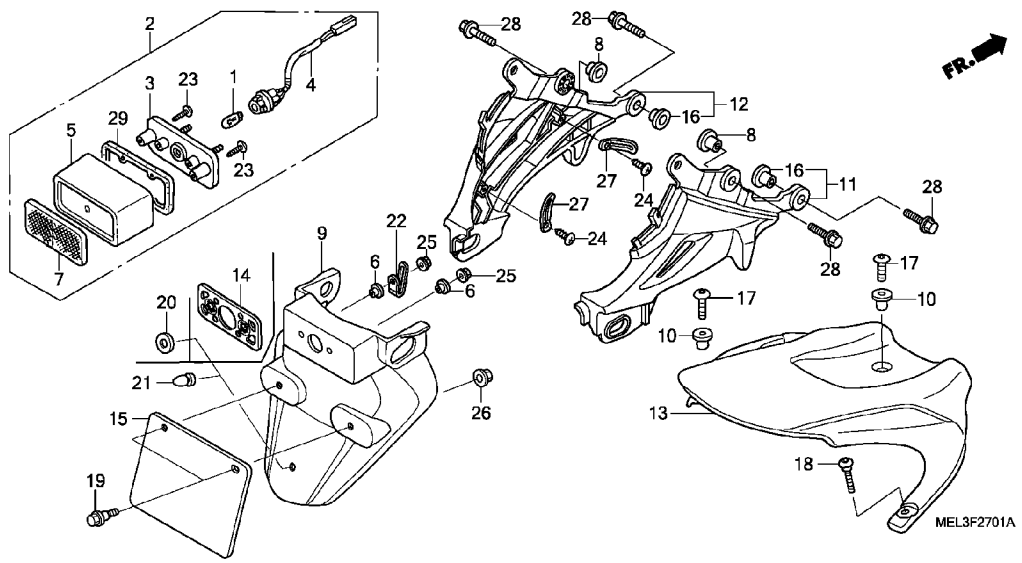


| Ref. No. | L.O.N. | (Relative ref. Number) Description | F.R.T. |
|---|---|---|---|
| 1 | 6161F3 | BULB, LICENSE LIGHT ---------- | 0.2 |
| 2 | 6161D8 | LIGHT, LICENSE ---------- | 0.4 |
| 4 | 6161E9 | SOCKET, LICENSE LIGHT -------- | 0.3 |
| 9 | 413105 | FENDER A, REAR ---------- | 0.5 |
| 11 | 4131C4 | STAY, REAR FENDER :RIGHT ----- | 0.5 |
| | 4131L9 | STAY, REAR FENDER :BOTH ------ | 0.5 |
| 12 | 4131C3 | STAY, REAR FENDER :LEFT ------ | 0.5 |
| | 4131L9 | STAY, REAR FENDER :BOTH ------ | 0.5 |
| 13 | 413111 | FENDER C, REAR ---------- | 0.2 |

| Ref. No. | Part No. | Description | Reqd. QTY CBR1000RR 4 | 5 | 6 | 7 | Serial No. | | Parts catalogue code |
|---|---|---|---|---|---|---|---|---|---|
| 1 | 33301-SA0-741 | BULB (12V 5W)(STANLEY) ------ | - | - | 1 | 1 | | | |
| 2 | 33720-MEL-D20 | LIGHT ASSY., LICENSE (12V5W) | - | - | 1 | 1 | | | |
| 3 | 33721-MEE-003 | BASE COMP., LICENSE --------- | - | - | 1 | 1 | | | |
| 4 | 33722-MEL-D20 | SOCKET COMP., LICENSE ------- | - | - | 1 | 1 | | | |
| 5 | 33723-MEE-003 | COVER COMP., LICENSE LIGHT -- | - | - | 1 | 1 | | | |
| 6 | 33731-MJ0-940 | COLLAR, REGULATOR MOUNTING -- | - | - | 2 | 2 | | | |
| 7 | 33741-MZ7-003 | REFLECTOR, REFLEX ---------- | - | - | 1 | 1 | | | |
| 8 | 40514-310-000 | COLLAR, CHAIN CASE ---------- | - | - | 2 | 2 | | | |
| 9 | 80100-MEE-A00 | FENDER A, RR. ---------- | - | - | 1 | - | -------- | -------- MX | |
| | 80100-MEE-D00 | ---------- | - | - | 1 | 1 | -------- | -------- BR,E,ED,EK,F,KO,2ED,2F,3E,4EK | |
| | | | - | - | - | 1 | -------- | -------- MX | |
| | 80100-MEE-J00 | ---------- | - | - | 1 | 1 | -------- | -------- U | |
| 10 | 80103-MCJ-750 | COLLAR, FENDER SETTING ------ | - | - | 2 | 2 | | | |
| 11 | 80115-MEL-D20 | STAY, R. FENDER A ---------- | - | - | 1 | 1 | | | |
| 12 | 80116-MEL-D20 | STAY, L. FENDER A ---------- | - | - | 1 | 1 | | | |
| 13 | 80120-MEL-000 | FENDER C, RR. ---------- | - | - | 1 | 1 | | | |
| 14 | 84703-MEE-D00 | RUBBER, LICENSE LIGHT ------- | - | - | 1 | - | -------- | -------- KO,MX,U | |
| | | | - | - | - | 1 | | | |
| 15 | 84710-MEE-650 | PLATE, NUMBER PLATE BACK ---- | - | - | 1 | 1 | -------- | -------- U | |
| 16 | 90001-961-670 | COLLAR, SIDE MOUNTING ------- | - | - | 2 | 2 | | | |
| 17 | 90103-MBG-000 | SCREW, PAN, 5X20 ---------- | - | - | 2 | 2 | | | |
| 18 | 90108-MAT-000 | SCREW, PAN, 5X21 ---------- | - | - | 1 | 1 | | | |
| 19 | 90122-752-000 | BOLT, SPECIAL, 6MM ---------- | - | - | 2 | 2 | -------- | -------- U | |
| 20 | 90581-GB5-610 | WASHER, PLAIN, 6MM ---------- | - | - | 1 | 1 | -------- | -------- E,ED,EK,F,2ED,2F,3E,4EK | |
| 21 | 90899-422-610 | PLUG, CONE TYPE ---------- | - | - | 1 | 1 | -------- | -------- BR,KO,MX,U | |

# REAR FENDER (CBR1000RR6/7)



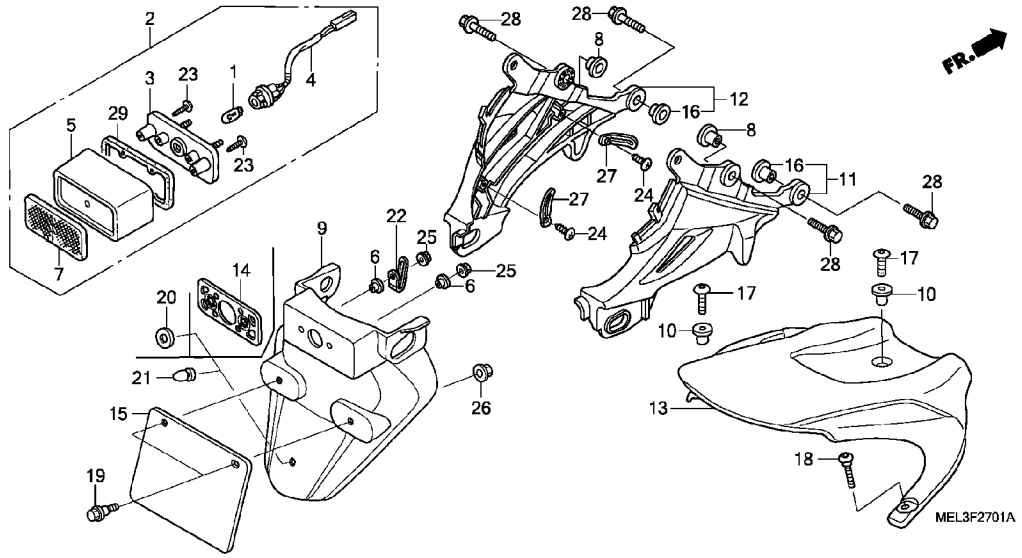


| Ref. No. | Part No. | Description | Reqd. QTY CBR1000RR 4 | 5 | 6 | 7 | Serial No. | Parts catalogue code |
|---|---|---|---|---|---|---|---|---|
| 22 | 91410-679-000 | CLIP, 2X60 | - | - | 1 | 1 | | |
| 23 | 93901-34410 | SCREW, TAPPING, 4X16 | - | - | 2 | 2 | | |
| 24 | 93913-14180 | SCREW, TAPPING, 4X10(PO) | - | - | 2 | - | -------- -------- | BR,E,ED,EK,F |
| | 93913-24280 | SCREW, TAPPING, 4X12(PO) | - | - | 2 | - | -------- -------- | KO,MX,U |
| | 93903-24280 | SCREW, TAPPING, 4X10 | - | - | - | 2 | | |
| 25 | 94050-05000 | NUT, FLANGE, 5MM | - | - | 2 | 2 | | |
| 26 | 94050-06070 | NUT, FLANGE, 6MM | - | - | 2 | 2 | -------- -------- | U |
| 27 | 94591-24000 | CLIP, WIRE, 2X40 | - | - | 2 | 2 | | |
| 28 | 96300-06020-00 | BOLT, FLANGE, 6X20 | - | - | 4 | 4 | | |
| 29 | 33729-MEE-003 | PACKING, LENS | - | - | 1 | 1 | | |

# WINKER (CBR1000RR4/5)



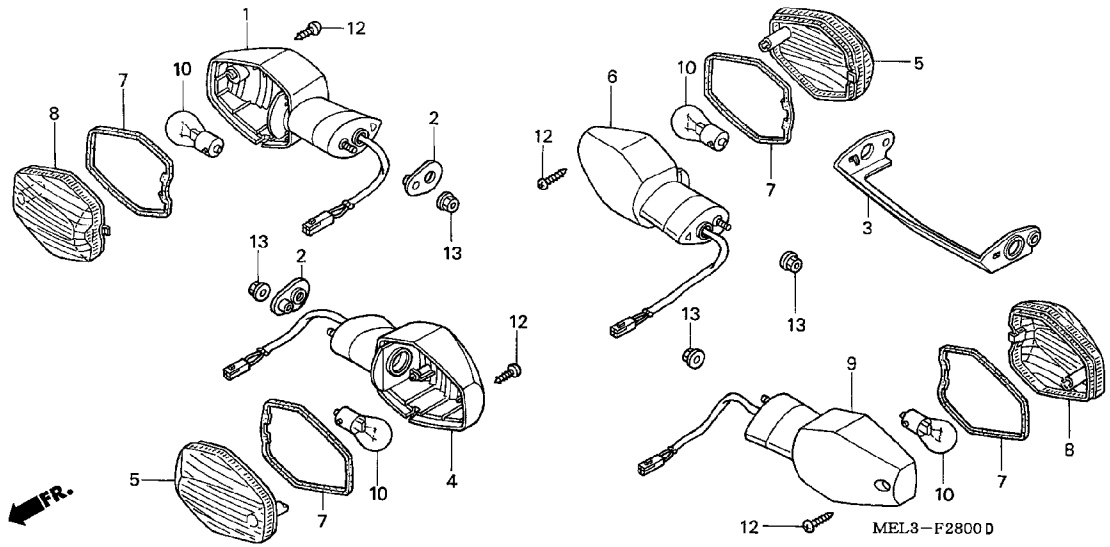


| Ref. No. | L.O.N. | (Relative ref. Number) Description | F.R.T. |
|---|---|---|---|
| 1 | 6161D0 | BASE, WINKER :RIGHT FRONT ···· | 0.2 |
| 4 | 6161C9 | BASE, WINKER :LEFT FRONT ····· | 0.2 |
| | 6161D1 | BASE, WINKER :BOTH FRONT ····· | 0.3 |
| 6 | 6161D3 | BASE, WINKER :RIGHT REAR ····· | 0.4 |
| 9 | 6161D2 | BASE, WINKER :LEFT REAR ····· | 0.4 |
| | 6161D4 | BASE, WINKER :BOTH REAR ····· | 0.5 |
| 10 | | (5,7,8) | |
| | 616133 | BULB, WINKER :FRONT ····· | 0.1 |
| | | .NOTE: Same time for two units | |
| | 616139 | BULB, WINKER :REAR ····· | 0.1 |
| | | .NOTE: Same time for two units | |
| | 6161G0 | BULB, WINKER :FOR 1 VEHICLE ·· | 0.2 |

| Ref. No. | Part No. | Description | Reqd. QTY CBR1000RR 4 | 5 | 6 | 7 | Serial No. | Parts catalogue code |
|---|---|---|---|---|---|---|---|---|
| 1 | 33403-MEL-640 | BASE COMP., R. FR. WINKER ··· | 1 | - | - | - | -------- -------- | BR,E,ED,F,G,MX,U |
| | | | - | 1 | - | - | | |
| | 33403-MEL-700 | ····· | 1 | - | - | - | -------- -------- | KO |
| 2 | 33409-MBW-000 | PLATE, WINKER SETTING ····· | 2 | 2 | - | - | | |
| 3 | 33409-MEL-000 | PLATE, WINKER SETTING ····· | 1 | 1 | - | - | | |
| 4 | 33453-MEL-640 | BASE COMP., L. FR. WINKER ··· | 1 | - | - | - | -------- -------- | BR,E,ED,F,G,MX,U |
| | | | - | 1 | - | - | | |
| | 33453-MEL-700 | ····· | 1 | - | - | - | -------- -------- | KO |
| 5 | 33602-MAT-E21 | LENS, WINKER ····· | 2 | 2 | - | - | | |
| 6 | 33603-MEL-640 | BASE COMP., R. RR. WINKER ··· | 1 | 1 | - | - | | |
| 7 | 33607-MAT-E21 | PACKING, LENS ····· | 4 | 4 | - | - | | |
| 8 | 33652-MAT-E21 | LENS, WINKER ····· | 2 | 2 | - | - | | |
| 9 | 33653-MEL-640 | BASE COMP., L. RR. WINKER ··· | 1 | 1 | - | - | | |
| 10 | 34905-MAS-601 | BULB, WINKER (12V 21W) ····· | 4 | 4 | - | - | | |
| 12 | 93911-24380 | SCREW, TAPPING, 4X14 ····· | 4 | 4 | - | - | | |
| 13 | 94050-06070 | NUT, FLANGE, 6MM ····· | 4 | 4 | - | - | | |

# WINKER (CBR1000RR6/7)



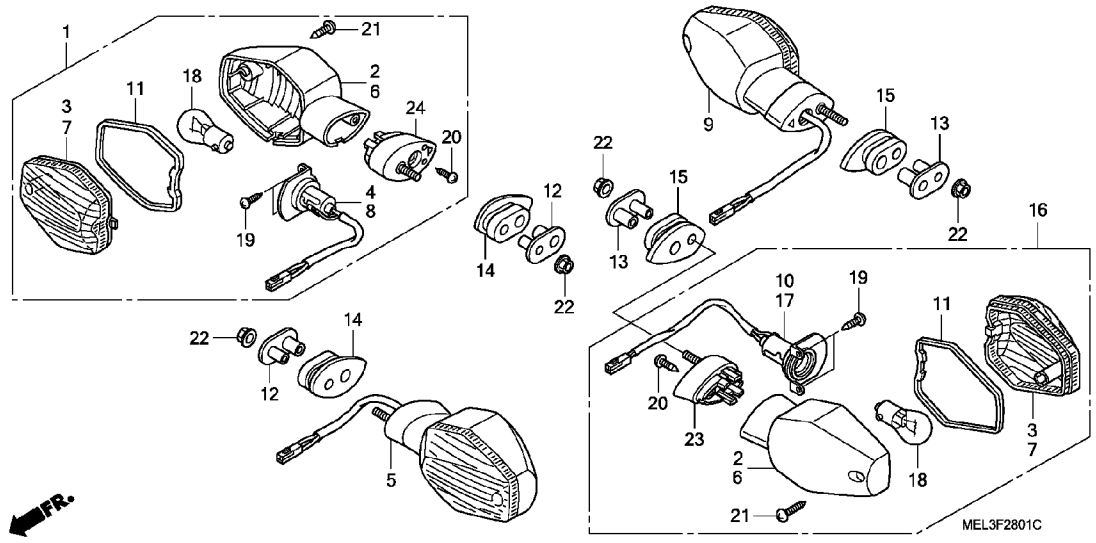


| Ref. No. | L.O.N. | (Relative ref. Number) Description | F.R.T. |
|---|---|---|---|
| 1 | 6161C4 | WINKER :RIGHT FRONT ---------- | 0.2 |
| | 6161C5 | WINKER :BOTH FRONT ---------- | 0.4 |
| 4 | | (2,24) | |
| | 6161B6 | SOCKET, WINKER :RIGHT FRONT -- | 0.3 |
| | 6161B7 | SOCKET, WINKER :BOTH FRONT --- | 0.5 |
| 5 | 6161C3 | WINKER :LEFT FRONT ---------- | 0.2 |
| 8 | | (6,24) | |
| | 6161B5 | SOCKET, WINKER :LEFT FRONT --- | 0.3 |
| 9 | 6161C7 | WINKER :RIGHT REAR ---------- | 0.4 |
| | 6161C8 | WINKER :BOTH REAR ---------- | 0.5 |
| 10 | | (2,23) | |
| | 6161R9 | SOCKET, WINKER :RIGHT REAR --- | 0.5 |
| | 6161S0 | SOCKET, WINKER :BOTH REAR ---- | 0.6 |
| 16 | 6161C6 | WINKER :LEFT REAR ---------- | 0.4 |
| 17 | | (6,23) | |
| | 6161R8 | SOCKET, WINKER :LEFT REAR ---- | 0.5 |
| 18 | | (3,7,11) | |
| | 616133 | BULB, WINKER :FRONT ---------- | 0.1 |
| | | .NOTE: Same time for two units | |
| | 616139 | BULB, WINKER :REAR ---------- | 0.1 |
| | | .NOTE: Same time for two units | |
| | 6161G0 | BULB, WINKER :FOR 1 VEHICLE -- | 0.2 |

| Ref. No. | Part No. | Description | Reqd. QTY CBR1000RR 4 | 5 | 6 | 7 | Serial No. | Parts catalogue code |
|---|---|---|---|---|---|---|---|---|
| 1 | 33400-MEL-D20 | WINKER ASSY., R. FR. (12V 21W) | - | - | 1 | 1 | | |
| 2 | 33401-MEJ-900 | BASE, R. WINKER ---------- (R. FR./L. RR.) | - | - | 2 | 2 | | |
| 3 | 33402-MEJ-900 | LENS, R. WINKER ---------- (R. FR./L. RR.) | - | - | 2 | 2 | | |
| 4 | 33403-MEL-D20 | SOCKET SET, R. WINKER ------- | - | - | 1 | 1 | | |
| 5 | 33450-MEL-D20 | WINKER ASSY., L. FR. (12V 21W) | - | - | 1 | 1 | | |
| 6 | 33451-MEJ-900 | BASE, L. WINKER ---------- (L. FR./R. RR.) | - | - | 2 | 2 | | |
| 7 | 33452-MEJ-900 | LENS, L. WINKER ---------- (L. FR./R. RR.) | - | - | 2 | 2 | | |
| 8 | 33453-MEL-D20 | SOCKET SET, L. WINKER ------- | - | - | 1 | 1 | | |
| 9 | 33600-MEL-D20 | WINKER ASSY., R. RR. (12V 21W) | - | - | 1 | 1 | | |
| 10 | 33603-MEL-D20 | SOCKET SET, R. WINKER ------- | - | - | 1 | 1 | | |
| 11 | 33607-MAT-E21 | PACKING, LENS ---------- | - | - | 4 | 4 | | |
| 12 | 33611-MEE-D00 | COLLAR, WINKER ---------- | - | - | 2 | 2 | | |
| 13 | 33611-MEL-D20 | COLLAR, WINKER ---------- | - | - | 2 | 2 | | |
| 14 | 33612-MEE-D00 | RUBBER, WINKER MOUNTING ----- | - | - | 2 | 2 | | |
| 15 | 33612-MEL-D20 | RUBBER, WINKER MOUNTING ----- | - | - | 2 | 2 | | |
| 16 | 33650-MEL-D20 | WINKER ASSY., L. RR. (12V 21W) | - | - | 1 | 1 | | |
| 17 | 33653-MEL-D20 | SOCKET SET, L. WINKER ------- | - | - | 1 | 1 | | |
| 18 | 34905-MEJ-671 | BULB, WINKER (12V 21W) ------ | - | - | 4 | 4 | | |
| 19 | 93901-32120 | SCREW, TAPPING, 3X8 --------- | - | - | 8 | 8 | | |
| 20 | 93911-24320 | SCREW, TAPPING, 4X14(PO) ---- | - | - | 4 | 4 | | |
| 21 | 93911-24380 | SCREW, TAPPING, 4X14 -------- | - | - | 4 | 4 | | |

# WINKER (CBR1000RR6/7)



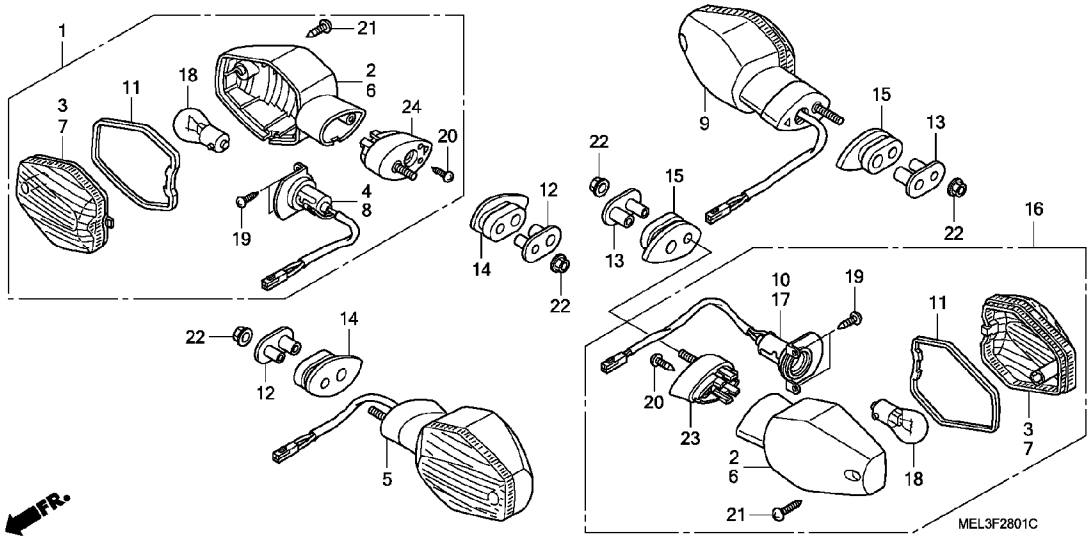


| Ref. No. | Part No. | Description | Reqd. QTY CBR1000RR 4 | 5 | 6 | 7 | Serial No. | Parts catalogue code |
|---|---|---|---|---|---|---|---|---|
| 22 | 94050-06070 | NUT, FLANGE, 6MM | - | - | 4 | 4 | | |
| 23 | 33691-MEL-D20 | STAY, WINKER (RR.) | - | - | 2 | 2 | | |
| 24 | 33691-MEE-D00 | STAY, WINKER (FR.) | - | - | 2 | 2 | | |

# TAILLIGHT



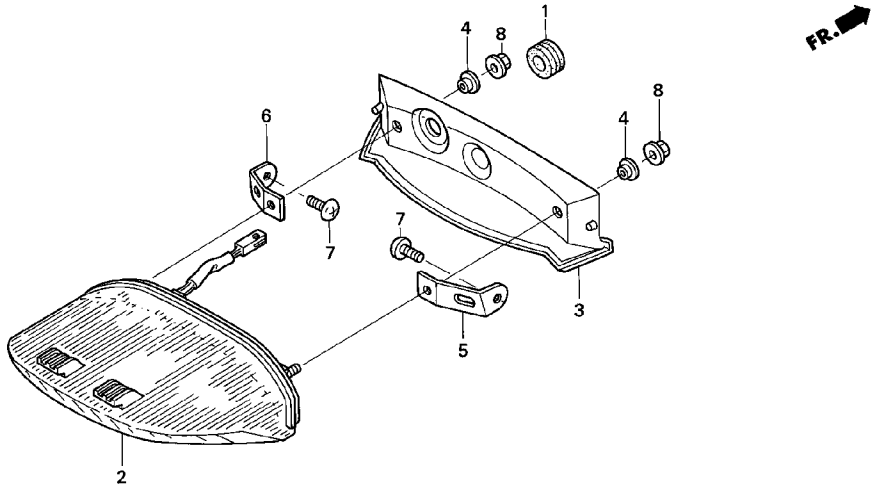


| Ref. No. | L.O.N. | (Relative ref. Number) Description | F.R.T. |
|---|---|---|---|
| 2 | | (3,5,6) | |
| | 6161D5 | TAILLIGHT UNIT | 0.3 |

| Ref. No. | Part No. | Description | Reqd. QTY CBR1000RR 4 | 5 | 6 | 7 | Serial No. | Parts catalogue code |
|---|---|---|---|---|---|---|---|---|
| 1 | 19111-MF5-000 | GROMMET, RESERVE TANK | 1 | 1 | 1 | 1 | | |
| 2 | 33701-MEL-640 | TAILLIGHT UNIT | 1 | 1 | - | - | | |
| | 33701-MEL-D21 | | - | - | 1 | 1 | | |
| 3 | 33715-MEE-000 | COVER, TAILLIGHT | 1 | 1 | 1 | 1 | | |
| 4 | 61101-MK4-620 | COLLAR | 2 | 2 | 2 | 2 | | |
| 5 | 77216-MEL-000 | STAY, R. TAILLIGHT SIDE | 1 | 1 | - | - | | |
| | 77216-MEL-D20 | | - | - | 1 | 1 | | |
| 6 | 77217-MEL-000 | STAY, L. TAILLIGHT SIDE | 1 | 1 | - | - | | |
| | 77217-MEL-D20 | | - | - | 1 | 1 | | |
| 7 | 90114-KW7-900 | SCREW, VISOR SETTING | 2 | 2 | 2 | 2 | | |
| 8 | 94050-05000 | NUT, FLANGE, 5MM | 2 | 2 | 2 | 2 | | |

# BATTERY (CBR1000RR4/5)



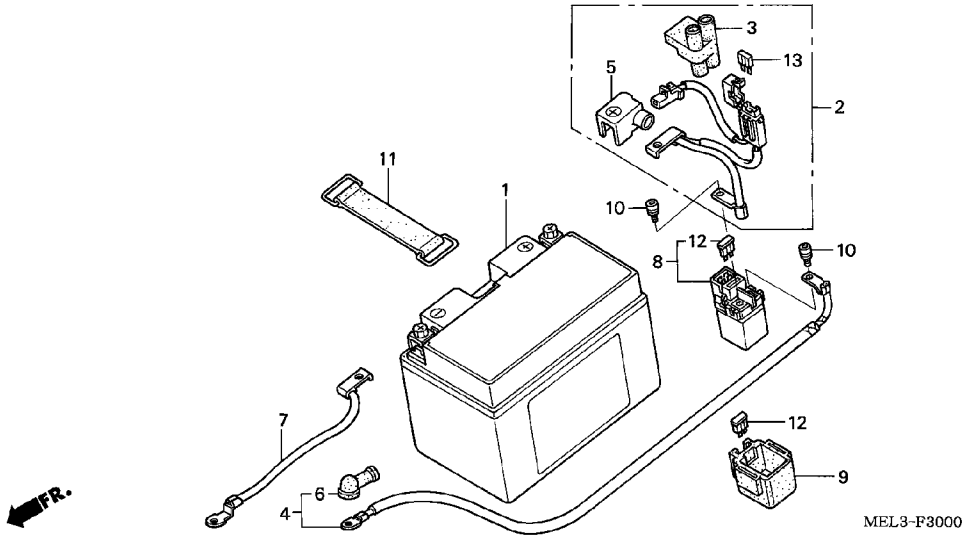


| Ref. No. | L.O.N. | (Relative ref. Number) Description | F.R.T. |
|---|---|---|---|
| 1 | 610100 | BATTERY ····· | 0.2 |
| 2 | 610105 | CABLE, POSITIVE BATTERY ····· | 0.2 |
| 4 | 612115 | CABLE, STARTER MOTOR ····· | 0.7 |
| 7 | 610110 | CABLE, NEGATIVE BATTERY ····· | 0.6 |
| 8 | 615113 | SWITCH, STARTER MAGNETIC ····· | 0.3 |

| Ref. No. | Part No. | Description | Reqd. QTY CBR1000RR 4 | 5 | 6 | 7 | Serial No. | | Parts catalogue code |
|---|---|---|---|---|---|---|---|---|---|
| 1 | 31500-MCJ-642 | BATTERY (YTZ10S)(YUASA) ····· | 1 | 1 | - | - | -------- | -------- | BR,E,ED,EK,F,G,MX,U,2ED,2F,2G,2U,3E,4EK |
| | 31500-MCJ-K00 | ····· | 1 | 1 | - | - | -------- | -------- | K0,2K0 |
| 2 | 32401-MEL-000 | CABLE, STARTER BATTERY ····· | 1 | 1 | - | - | | | |
| 3 | 32406-MEL-300 | COVER, STARTER MAGNETIC TERMINAL | 1 | 1 | - | - | | | |
| 4 | 32410-MEL-000 | CABLE, STARTER MOTOR ····· | 1 | - | - | - | | | |
| | | | - | 1 | - | - | -------- | -------- | BR,E,ED,EK,F,G,K0,MX,U,2ED,2F,2G,2U,3E,4EK |
| | | | - | 1 | - | - | -------- | -------- | 2K0 |
| 5 | 32411-MBW-D20 | COVER, BATTERY TERMINAL ····· | 1 | 1 | - | - | | | |
| 6 | 32411-253-000 | COVER, STARTER MOTOR TERMINAL | 1 | 1 | - | - | | | |
| 7 | 32601-MEL-000 | CABLE, BATTERY EARTH ····· | 1 | - | - | - | -------- | -------- | F,G,K0 |
| | 32601-MEL-010 | ····· | 1 | - | - | - | -------- | -------- | BR,E,ED,MX,U |
| | | | - | 1 | - | - | | | |
| 8 | 35850-MR5-007 | SWITCH ASSY., STARTER MAGNETIC | 1 | 1 | - | - | | | |
| 9 | 35856-MBG-003 | RUBBER, SHOCK ····· | 1 | 1 | - | - | | | |
| 10 | 90111-MR5-000 | BOLT, SOCKET, 5X9 ····· | 2 | 2 | - | - | | | |
| 11 | 95012-13001 | BAND B2, BATTERY ····· | 1 | 1 | - | - | | | |
| 12 | 98200-33000 | FUSE, BLADE (30A) ····· | 2 | 2 | - | - | | | |
| 13 | 98200-42000 | FUSE, MINI (20A) ····· | 1 | 1 | - | - | | | |

# BATTERY (CBR1000RR6/7)



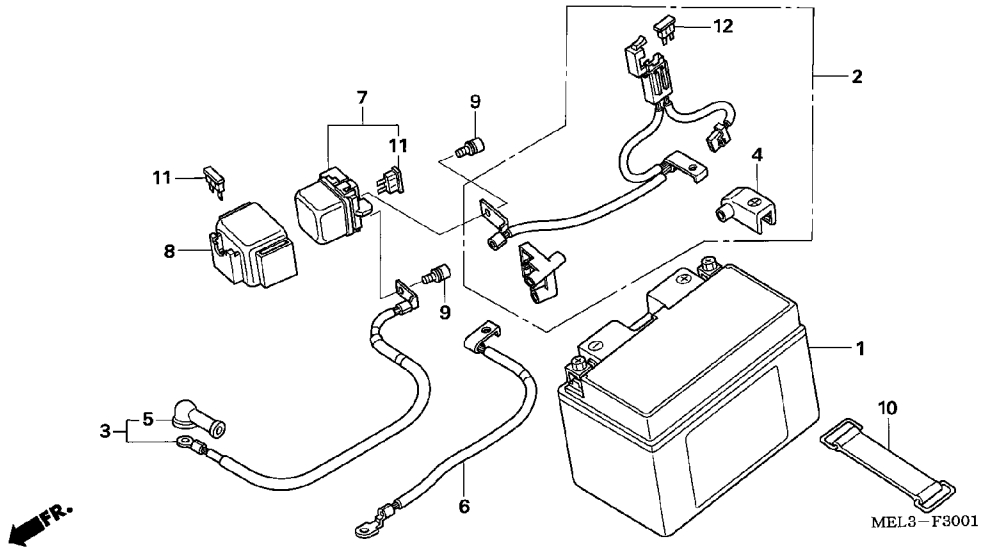


| Ref. No. | L.O.N. | (Relative ref. Number) Description | F.R.T. |
|---|---|---|---|
| 1 | 610100 | BATTERY ..... | 0.2 |
| 2 | 610105 | CABLE, POSITIVE BATTERY ..... | 0.2 |
| 3 | 612115 | CABLE, STARTER MOTOR ..... | 0.7 |
| 6 | 610110 | CABLE, NEGATIVE BATTERY ..... | 0.6 |
| 7 | 615113 | SWITCH, STARTER MAGNETIC ..... | 0.3 |

| Ref. No. | Part No. | Description | Reqd. QTY CBR1000RR 4 | 5 | 6 | 7 | Serial No. | Parts catalogue code |
|---|---|---|---|---|---|---|---|---|
| 1 | 31500-MCJ-642 | BATTERY (YTZ10S)(YUASA) ..... | - | - | 1 | 1 | -------- -------- | BR,E,ED,EK,F,MX,U,2ED,2F,3E,4EK |
| | 31500-MEE-D02 | BATTERY (FTZ10S)(FURUKAWA) .. | - | - | 1 | 1 | -------- -------- | BR,E,ED,EK,F,MX,U,2ED,2F,3E,4EK |
| | 31500-MEE-K02 | ..... | - | - | 1 | 1 | -------- -------- | K0 |
| | 31500-MCJ-K00 | BATTERY (YTZ10S)(YUASA) ..... | - | - | - | 1 | -------- -------- | K0 |
| 2 | 32401-MEL-D20 | CABLE, STARTER BATTERY ..... | - | - | 1 | 1 | | |
| 3 | 32410-MEL-D20 | CABLE, STARTER MOTOR ..... | - | - | 1 | - | | |
| | 32410-MEL-D30 | ..... | - | - | - | 1 | | |
| 4 | 32411-MEL-D20 | COVER, BATTERY TERMINAL ..... | - | - | 1 | 1 | | |
| 5 | 32411-253-000 | COVER, STARTER MOTOR TERMINAL | - | - | 1 | 1 | | |
| 6 | 32601-MEL-D20 | CABLE, BATTERY EARTH ..... | - | - | 1 | 1 | | |
| 7 | 35850-MR5-007 | SWITCH ASSY., STARTER MAGNETIC | - | - | 1 | 1 | | |
| 8 | 35856-KBH-000 | RUBBER, SHOCK ..... | - | - | 1 | 1 | | |
| 9 | 90111-MR5-000 | BOLT, SOCKET, 5X9 ..... | - | - | 2 | 2 | | |
| 10 | 95012-13001 | BAND B2, BATTERY ..... | - | - | 1 | 1 | | |
| 11 | 98200-33000 | FUSE, BLADE (30A) ..... | - | - | 2 | 2 | | |
| 12 | 98200-42000 | FUSE, MINI (20A) ..... | - | - | 1 | 1 | | |

# SERVO MOTOR (CBR1000RR4/5)



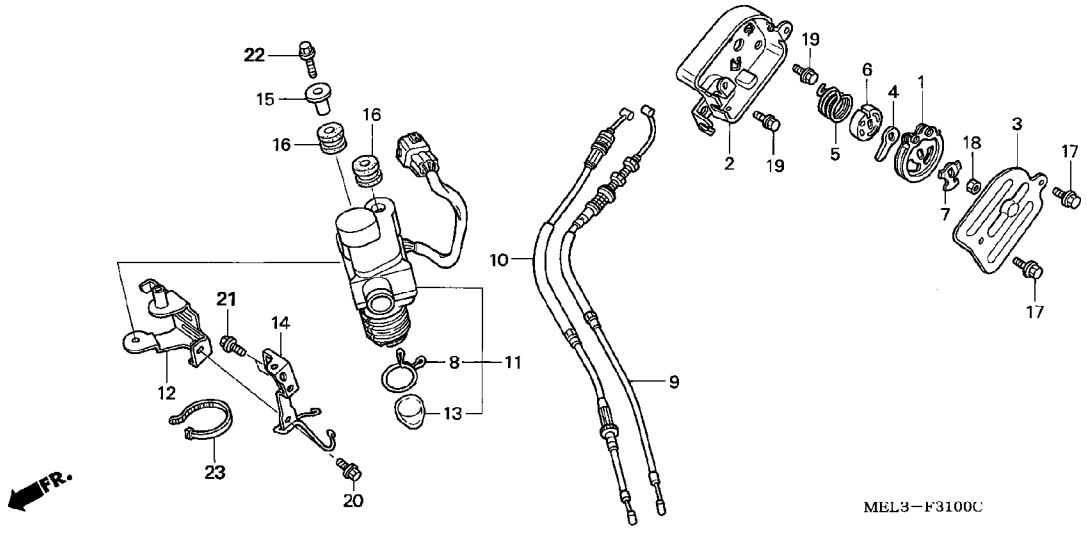


| Ref. No. | L.O.N. | (Relative ref. Number) Description | F.R.T. |
|---|---|---|---|
| 1 | | (4,5,6) | |
| | 313118 | GUIDE, EXHAUST VALVE CABLE ··· | 1.6 |
| | | .INCLUDES: Exhaust gas control valve cable adjustment | |
| 2 | 3131D5 | BODY, EXHAUST VALVE CABLE GUIDE ····· | 1.7 |
| | | .INCLUDES: Exhaust gas control valve cable adjustment | |
| 3 | 3131E8 | COVER, EXHAUST VALVE CABLE GUIDE ····· | 0.1 |
| 9 | 811193 | CABLE A, EXHAUST VALVE ····· | 1.1 |
| | | .NOTE: Same time for two units | |
| | | .INCLUDES: Exhaust gas control valve cable adjustment | |
| 10 | 811195 | CABLE B, EXHAUST VALVE ····· | 1.1 |
| | | .INCLUDES: Exhaust gas control valve cable adjustment | |
| 11 | 313119 | MOTOR, EXHAUST BUTTERFLY VALVE SERVO ····· | 1.0 |

| Ref. No. | Part No. | Description | Reqd. QTY CBR1000RR 4 | 5 | 6 | 7 | Serial No. | Parts catalogue code |
|---|---|---|---|---|---|---|---|---|
| 1 | 18180-MEL-000 | GUIDE, VALVE CABLE ····· | 1 | 1 | - | - | | |
| 2 | 18183-MEL-000 | BODY, VALVE GUIDE ····· | 1 | 1 | - | - | | |
| 3 | 18184-MEL-000 | COVER, VALVE GUIDE ····· | 1 | 1 | - | - | | |
| 4 | 18185-MEL-000 | STOPPER, EX. VALVE ····· | 1 | 1 | - | - | | |
| 5 | 18186-MEL-000 | SPRING, RETURN ····· | 1 | 1 | - | - | | |
| 6 | 18189-MEL-000 | HOLDER, SPRING ····· | 1 | 1 | - | - | | |
| 7 | 18195-MEL-000 | WASHER B, LOCK ····· | 1 | 1 | - | - | | |
| 8 | 18532-634-670 | CLIP, AIR HOSE, 21.5 ····· | 1 | 1 | - | - | | |
| 9 | 18910-MEL-000 | CABLE COMP. A, EX. VALVE ···· | 1 | 1 | - | - | | |
| 10 | 18920-MEL-000 | CABLE COMP. B, EX. VALVE ···· | 1 | 1 | - | - | | |
| 11 | 31420-MEL-000 | MOTOR ASSY., SERVO ····· | 1 | 1 | - | - | | |
| 12 | 31421-MEL-000 | STAY A, SERVO MOTOR ····· | 1 | 1 | - | - | | |
| 13 | 31425-KAE-004 | CAP ····· | 1 | 1 | - | - | | |
| 14 | 31425-MEL-000 | STAY B, SERVO MOTOR ····· | 1 | - | - | - | | |
| | 31425-MEL-D00 | ····· | - | 1 | - | - | | |
| 15 | 50324-425-010 | COLLAR, 6.3X13 ····· | 1 | 1 | - | - | | |
| 16 | 77205-KM4-000 | GROMMET, SEAT SETTING ····· | 2 | 2 | - | - | | |
| 17 | 90002-ZG3-000 | BOLT, FLANGE, 5X8 ····· | 2 | 2 | - | - | | |
| 18 | 94001-06020-0S | NUT, HEX., 6MM ····· | 1 | 1 | - | - | | |
| 19 | 96001-06008-02 | BOLT, FLANGE, 6X8 ····· | 2 | 2 | - | - | | |
| 20 | 96001-06010-07 | BOLT, FLANGE, 6X10 ····· | 1 | 1 | - | - | | |
| 21 | 96001-06010-07 | BOLT, FLANGE, 6X10 ····· | 2 | 2 | - | - | | |
| 22 | 96001-06022-07 | BOLT, FLANGE, 6X22 ····· | 1 | 1 | - | - | | |
| 23 | 35701-MG9-950 | BAND ····· | 1 | 1 | - | - | | |

# F-31-1 SERVO MOTOR (CBR1000RR6/7)

M12

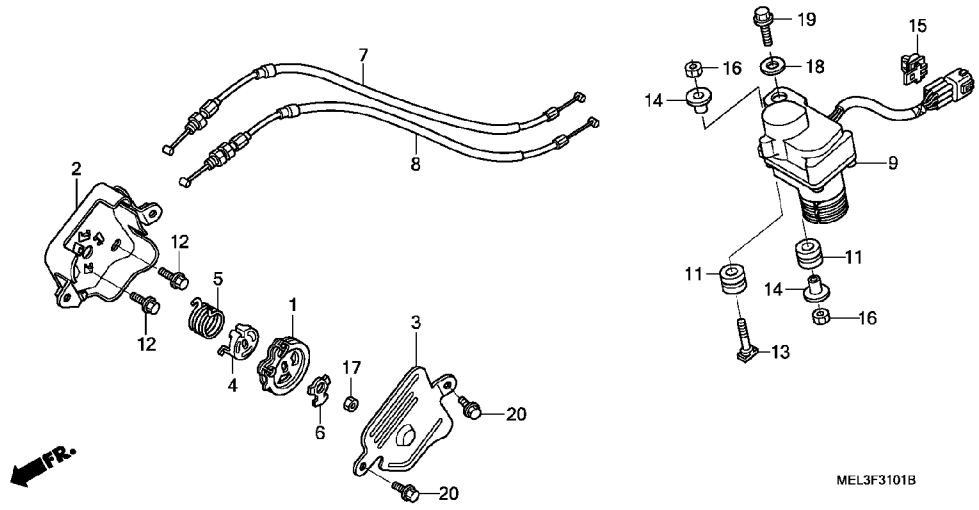


| Ref. No. | L.O.N. | (Relative ref. Number) Description | F.R.T. |
|---|---|---|---|
| 1 | | (4,5,6) | |
| | 313118 | GUIDE, EXHAUST VALVE CABLE --- | 1.3 |
| | | .INCLUDES: Exhaust gas control valve cable adjustment | |
| 2 | 3131D5 | BODY, EXHAUST VALVE CABLE GUIDE ---------- | 1.4 |
| | | .INCLUDES: Exhaust gas control valve cable adjustment | |
| 3 | 3131E8 | COVER, EXHAUST VALVE CABLE GUIDE ---------- | 0.1 |
| 7 | 811193 | CABLE A, EXHAUST VALVE ------- | 0.8 |
| | | .NOTE: Same time for two units | |
| | | .INCLUDES: Exhaust gas control valve cable adjustment | |
| 8 | 811195 | CABLE B, EXHAUST VALVE ------- | 0.8 |
| | | .INCLUDES: Exhaust gas control valve cable adjustment | |
| 9 | 313119 | MOTOR, EXHAUST BUTTERFLY VALVE SERVO ---------- | 0.7 |

| Ref. No. | Part No. | Description | Reqd. QTY CBR1000RR 4 | 5 | 6 | 7 | Serial No. | Parts catalogue code |
|---|---|---|---|---|---|---|---|---|
| 1 | 18180-MEL-D20 | GUIDE, VALVE CABLE ---------- | - | - | 1 | 1 | | |
| 2 | 18183-MEL-D20 | BODY, VALVE GUIDE ---------- | - | - | 1 | 1 | | |
| 3 | 18184-MEL-D20 | COVER, VALVE GUIDE ---------- | - | - | 1 | 1 | | |
| 4 | 18185-MEL-D20 | STOPPER, EX. VALVE ---------- | - | - | 1 | 1 | | |
| 5 | 18186-MEL-D20 | SPRING, RETURN ---------- | - | - | 1 | 1 | | |
| 6 | 18195-MEL-D20 | WASHER B, LOCK ---------- | - | - | 1 | 1 | | |
| 7 | 18910-MEL-D20 | CABLE COMP. A, EX. VALVE ---- | - | - | 1 | 1 | | |
| 8 | 18920-MEL-D20 | CABLE COMP. B, EX. VALVE ---- | - | - | 1 | 1 | | |
| 9 | 31420-MEL-D21 | MOTOR ASSY., SERVO ---------- | - | - | 1 | 1 | | |
| 11 | 77205-KM4-000 | GROMMET, SEAT SETTING ------- | - | - | 2 | 2 | | |
| 12 | 90002-ZG3-000 | BOLT, FLANGE, 5X8 ---------- | - | - | 2 | 2 | | |
| 13 | 90015-MEL-D20 | BOLT, SERVO MOTOR CASE, 6X28 | - | - | 1 | 1 | | |
| 14 | 90503-KAE-000 | COLLAR, 6.3X14.5 ---------- | - | - | 2 | 2 | | |
| 15 | 91565-SEL-003 | CLIP, COUPLER (BLACK) ------- | - | - | 1 | 1 | | |
| 16 | 94001-06000-0S | NUT, HEX., 6MM ---------- | - | - | 2 | - | | |
| | 94050-06000 | NUT, FLANGE, 6MM ---------- | - | - | - | 2 | | |
| 17 | 94001-06020-0S | NUT, HEX., 6MM ---------- | - | - | 1 | 1 | | |
| 18 | 94101-06000 | WASHER, PLAIN, 6MM ---------- | - | - | 1 | 1 | | |
| 19 | 96001-06025-00 | BOLT, FLANGE, 6X25 ---------- | - | - | 1 | 1 | | |
| 20 | 90002-ZG3-000 | BOLT, FLANGE, 5X8 ---------- | - | - | 2 | - | -------- -------- | BR,E,ED,EK,F |
| | 16546-HW4-680 | SCREW-WASHER, 5X12 ---------- | - | - | 2 | - | -------- -------- | KO,MX,U |
| | | | - | - | - | 2 | | |

3

# WIRE HARNESS (CBR1000RR4/5)



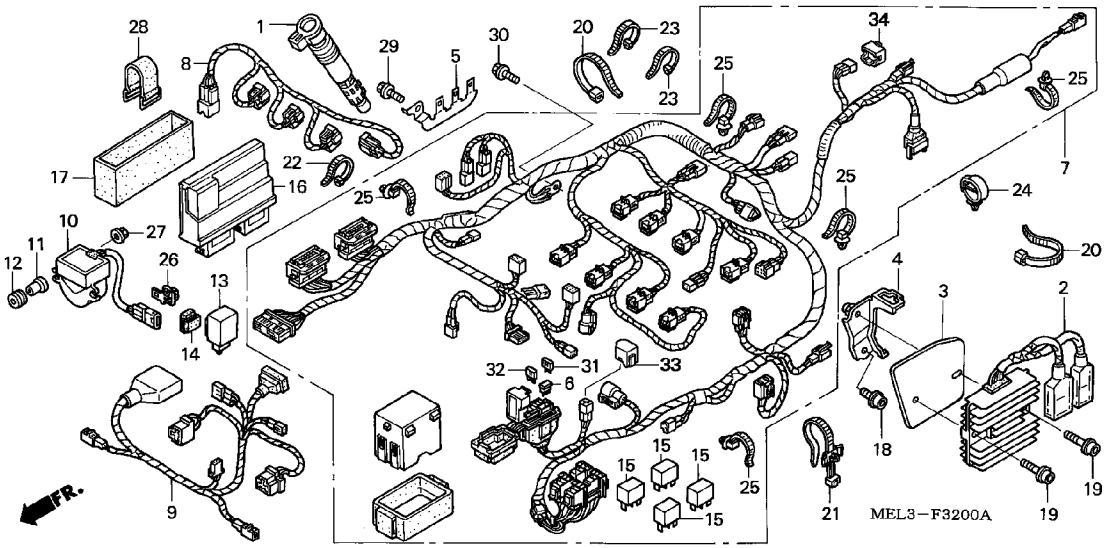


| Ref. No. | L.O.N. | (Relative ref. Number) Description | F.R.T. |
|---|---|---|---|
| 1 | 6141B8 | COIL, DIRECT IGNITION ····· | 1.0 |
| | 6141B8A | .Replace 1 direct ignition coil add ····· | 0.1 |
| | 6141B8B | .Replace 2 direct ignition coils add ····· | 0.2 |
| | 6141C0 | COIL, DIRECT IGNITION :FOR 1 VEHICLE ····· | 1.3 |
| 2 | 6131B2 | RECTIFIER, REGULATE ····· | 0.4 |
| 7 | 611100 | HARNESS, WIRE ····· | 2.2 |
| 8 | 611145 | SUB HARNESS, IGNITION ····· | 1.0 |
| 9 | 6111D7 | SUB HARNESS, FRONT ····· | 0.7 |
| 10 | 617125 | SENSOR, BANK ANGLE ····· | 0.7 |
| 13 | 6111C3 | RELAY, WINKER ····· | 0.7 |
| 15 | 6111B6 | RELAY, ENGINE STOP ····· | 0.3 |
| | 6111D9 | RELAY, FAN CONTROL ····· | 0.3 |
| | 6111E0 | RELAY, FUEL CUT-OFF ····· | 0.3 |
| | 6111D8 | RELAY, HEADLIGHT ····· | 0.3 |
| 16 | 618135 | ENGINE CONTROL MODULE(ECM) ··· | 0.6 |

| Ref. No. | Part No. | Description | Reqd. QTY CBR1000RR 4 | 5 | 6 | 7 | Serial No. | Parts catalogue code |
|---|---|---|---|---|---|---|---|---|
| 1 | 30700-MEL-003 | COIL, CAP & IGNITION ····· | 4 | 4 | - | - | | |
| 2 | 31600-MEL-003 | RECTIFIER ASSY., REGULATE ··· | 1 | - | - | - | -------- -------- | BR,F,G,KO,MX,U |
| | 31600-MEL-013 | ····· | 1 | - | - | - | -------- -------- | E,ED |
| | | | - | 1 | - | - | | |
| 3 | 31605-MEL-010 | SPACER, REGULATOR RECTIFIER · | 1 | - | - | - | | |
| | 31605-MEL-D00 | ····· | - | 1 | - | - | | |
| 4 | 31606-MEL-010 | STAY, REGULATE RECTIFIER ···· | 1 | - | - | - | -------- -------- | BR,F,G,KO,MX,U |
| | 31606-MEL-020 | ····· | 1 | - | - | - | -------- -------- | E,ED |
| | | | - | 1 | - | - | | |
| 5 | 31607-MEL-000 | STAY, R. COUPLER ····· | 1 | - | - | - | -------- -------- | BR,F,G,KO,MX,U |
| | 31607-MEL-010 | ····· | 1 | - | - | - | -------- -------- | E,ED |
| | | | - | 1 | - | - | | |
| 6 | 31730-MAS-601 | DIODE ASSY., THREE WAY (SUMITOMO) | 1 | 1 | - | - | | |
| 7 | 32100-MEL-610 | HARNESS, WIRE ····· | 1 | - | - | - | -------- -------- | G |
| | 32100-MEL-640 | ····· | 1 | - | - | - | -------- -------- | BR,E,ED,F,KO,U |
| | 32100-MEL-670 | ····· | 1 | - | - | - | -------- -------- | MX |
| | 32100-MEL-A00 | ····· | - | 1 | - | - | -------- -------- | MX |
| | 32100-MEL-D00 | ····· | - | 1 | - | - | -------- -------- | BR,E,ED,EK,F,KO,U,2ED,2F,2KO,2U,3E,4EK |
| | 32100-MEL-G00 | ····· | - | 1 | - | - | -------- -------- | G,2G |
| 8 | 32102-MEL-000 | SUB HARNESS, IGNITION ····· | 1 | 1 | - | - | | |
| 9 | 32103-MEL-600 | SUB HARNESS, FR. ····· | 1 | - | - | - | -------- -------- | E |
| | 32103-MEL-640 | ····· | 1 | - | - | - | -------- -------- | BR,ED,F,G,KO,MX,U |
| | 32103-MEL-D00 | ····· | - | 1 | - | - | -------- -------- | BR,ED,F,G,KO,MX,2ED,2F,2G,2KO |
| | 32103-MEL-E00 | ····· | - | 1 | - | - | -------- -------- | E,EK,U,2U,3E,4EK |
| 10 | 35161-MEL-003 | SENSOR COMP., BANK ANGLE ···· | 1 | 1 | - | - | | |
| 11 | 35162-MN5-003 | COLLAR ····· | 2 | 2 | - | - | | |

# WIRE HARNESS (CBR1000RR4/5)



| Ref. No. | Part No. | Description | Reqd. QTY CBR1000RR 4 | 5 | 6 | 7 | Serial No. | Parts catalogue code |
|---|---|---|---|---|---|---|---|---|
| 12 | 35163-MN5-003 | GROMMET | 2 | 2 | - | - | | |
| 13 | 38301-MBW-D21 | RELAY COMP., WINKER (DENSO) | 1 | 1 | - | - | | |
| 14 | 38306-GE7-000 | SUSPENSION, WINKER RELAY | 1 | 1 | - | - | | |
| 15 | 38501-MEL-000 | RELAY ASSY., POWER (MICRO ISO 4P) | 4 | - | - | - | | |
| | 38501-MEL-003 | | - | 4 | - | - | | |
| 16 | 38770-MEL-622 | PGM-FI UNIT | 1 | 1 | - | - | -------- -------- | F,2F |
| | 38770-MEL-613 | | 1 | 1 | - | - | -------- -------- | G,2G |
| | 38770-MEL-643 | | 1 | - | - | - | -------- -------- | E,ED,KO,U |
| | 38770-MEL-631 | | 1 | 1 | - | - | -------- -------- | BR |
| | 38770-MEL-661 | | 1 | - | - | - | -------- -------- | MX |
| | 38770-MEL-D01 | | - | 1 | - | - | -------- -------- | E,ED,EK,KO,U,2ED,2KO,2U,3E,4EK |
| | 38770-MEL-M01 | | - | 1 | - | - | -------- -------- | MX |
| 17 | 38776-MEL-000 | CUSHION, PGM-FI UNIT | 1 | 1 | - | - | | |
| 18 | 90009-MF5-000 | BOLT, FLANGE SOCKET, 6X12 | 1 | 1 | - | - | | |
| 19 | 90091-MM5-640 | BOLT, SOCKET, 6X22 | 2 | 2 | - | - | | |
| 20 | 90620-SB2-003 | BAND, WIRE HARNESS | 2 | 2 | - | - | | |
| 21 | 90649-SC2-003 | BAND, WIRE HARNESS (NATURAL) (150MM) | 1 | 1 | - | - | | |
| 22 | 90650-KV6-003 | BAND, WIRE | 1 | 1 | - | - | | |
| 23 | 90652-KT1-771 | BAND, WIRE (BLACK) | 2 | 2 | - | - | | |
| 24 | 90681-763-A01 | CLIP, WIRE HARNESS | 1 | 1 | - | - | | |
| 25 | 91541-SOA-003 | CLIP, HARNESS BAND (BLACK) (145MM) | 5 | 5 | - | - | | |
| 26 | 91565-SEL-003 | CLIP, COUPLER (BLACK) | 1 | 1 | - | - | | |
| 27 | 94050-04000 | NUT, FLANGE, 4MM | 2 | 2 | - | - | | |
| 28 | 95012-11001 | BAND A, BATTERY | 1 | 1 | - | - | | |
| 29 | 96001-06012-00 | BOLT, FLANGE, 6X12 | 1 | 1 | - | - | | |
| 30 | 96300-06012-00 | BOLT, FLANGE, 6X12 | 1 | 1 | - | - | | |
| 31 | 98200-41000 | FUSE, MINI (10A) | 5 | 5 | - | - | | |
| 32 | 98200-42000 | FUSE, MINI (20A) | 3 | 3 | - | - | | |
| 33 | 32606-GEV-761 | CAP, DUMMY (4P)(RED) | - | 1 | - | - | | |
| 34 | 32606-MEL-D01 | CAP, DUMMY (6P) | - | 1 | - | - | -------- -------- | BR,E,ED,EK,F,G,KO,U,2ED,2F,2G,2KO,2U,3E,4EK |

# WIRE HARNESS (CBR1000RR6/7)



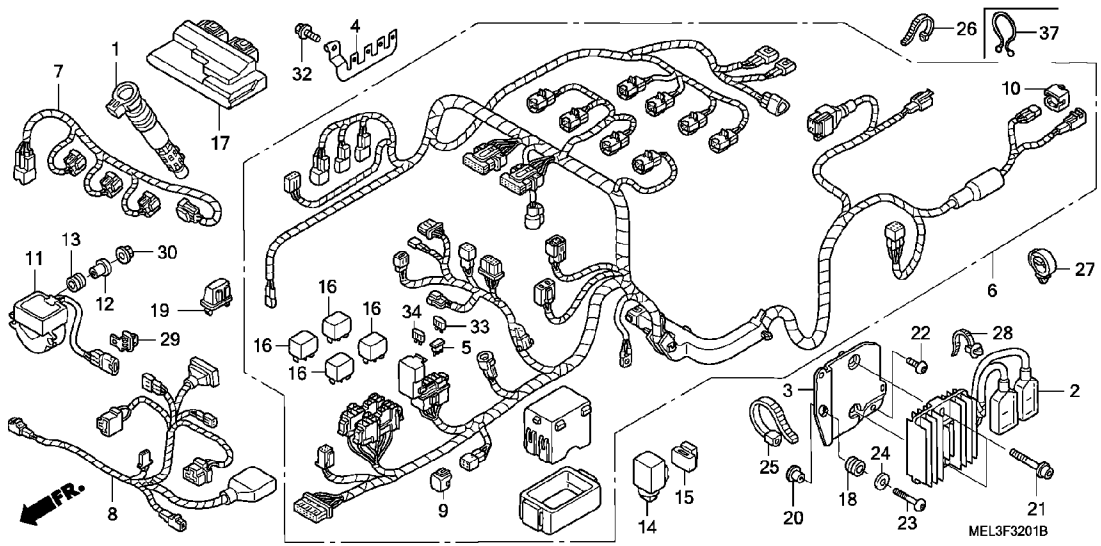


| Ref. No. | L.O.N. | (Relative ref. Number) Description | F.R.T. |
|---|---|---|---|
| 1 | 6141B8 | COIL, DIRECT IGNITION ····· | 1.3 |
| | 6141B8A | .Replace 1 direct ignition coil add ····· | 0.1 |
| | 6141B8B | .Replace 2 direct ignition coils add ····· | 0.2 |
| | 6141C0 | COIL, DIRECT IGNITION :FOR 1 VEHICLE ····· | 1.6 |
| 2 | 6131B2 | RECTIFIER, REGULATE ····· | 0.5 |
| 6 | 611100 | HARNESS, WIRE ····· | 2.2 |
| 7 | 611145 | SUB HARNESS, IGNITION ····· | 1.3 |
| 8 | 6111D7 | SUB HARNESS, FRONT ····· | 0.9 |
| 11 | 617125 | SENSOR, BANK ANGLE ····· | 0.9 |
| 14 | 6111C3 | RELAY, WINKER ····· | 0.4 |
| 16 | 6111B6 | RELAY, ENGINE STOP ····· | 0.4 |
| | 6111D9 | RELAY, FAN CONTROL ····· | 0.4 |
| | 6111E0 | RELAY, FUEL CUT-OFF ····· | 0.4 |
| | 6111E4 | RELAY, HEADLIGHT :HI BEAM ···· | 0.4 |
| 17 | 618135 | ENGINE CONTROL MODULE(ECM) ··· | 0.5 |

3

| Ref. No. | Part No. | Description | Reqd. QTY CBR1000RR 4 | 5 | 6 | 7 | Serial No. | | Parts catalogue code |
|---|---|---|---|---|---|---|---|---|---|
| 1 | 30700-MEL-003 | COIL, CAP & IGNITION ····· | - | - | 4 | 4 | | | |
| 2 | 31600-MEL-A21 | RECTIFIER ASSY., REGULATE ··· | - | - | 1 | 1 | -------- | -------- | MX |
| | 31600-MEL-D21 | ····· | - | - | 1 | 1 | -------- | -------- | BR,E,ED,EK,F,KO,U,2ED,2F,3E,4EK |
| 3 | 31605-MEL-D20 | SPACER, REGULATOR RECTIFIER · | - | - | 1 | 1 | | | |
| 4 | 31607-MEL-D20 | BRACKET, R. CONNECTER ····· | - | - | 1 | 1 | | | |
| 5 | 31730-MAS-601 | DIODE ASSY., THREE WAY (SUMITOMO) | - | - | 1 | 1 | | | |
| 6 | 32100-MEL-D20 | HARNESS, WIRE ····· | - | - | 1 | - | -------- | -------- | F |
| | | | - | - | 1 | - | -------- | 6M200081 | KO |
| | | | - | - | 1 | - | -------- | 6M200626 | U |
| | | | - | - | 1 | - | -------- | 6M200662 | BR |
| | | | - | - | 1 | - | -------- | 6M214499 | E,ED,EK |
| | 32100-MEL-D21 | ····· | - | - | 1 | - | 6M200082 | -------- | KO |
| | | | - | - | 1 | - | 6M200627 | -------- | U |
| | | | - | - | 1 | - | 6M200663 | -------- | BR |
| | | | - | - | 1 | - | 6M214500 | -------- | E,ED,EK |
| | 32100-MEL-M22 | ····· | - | - | 1 | - | -------- | -------- | MX |
| | 32100-MEL-D30 | ····· | - | - | - | 1 | -------- | -------- | BR,E,ED,EK,F,KO,U,2ED,2F,3E,4EK |
| | 32100-MEL-M30 | ····· | - | - | - | 1 | -------- | -------- | MX |
| 7 | 32102-MEL-D20 | SUB HARNESS, IGNITION ····· | - | - | 1 | 1 | | | |
| 8 | 32103-MEL-D20 | SUB HARNESS, FR. ····· | - | - | 1 | - | -------- | -------- | BR,ED,F,KO,MX |
| | 32103-MEL-E20 | ····· | - | - | 1 | - | -------- | -------- | E,EK,U |
| | 32103-MEL-D30 | ····· | - | - | - | 1 | -------- | -------- | BR,ED,F,KO,MX,2ED,2F |
| | 32103-MEL-E30 | ····· | - | - | - | 1 | -------- | -------- | E,EK,U,3E,4EK |
| 9 | 32606-GEV-761 | CAP, DUMMY (4P)(RED) ····· | - | - | 1 | 1 | | | |
| 10 | 32606-MEL-D01 | CAP, DUMMY (6P) ····· | - | - | 1 | 1 | -------- | -------- | BR,E,ED,EK,F,KO,U,2ED,2F,3E,4EK |
| 11 | 35161-MEL-003 | SENSOR COMP., BANK ANGLE ···· | - | - | 1 | 1 | | | |

# WIRE HARNESS (CBR1000RR6/7)



| Ref. No. | Part No. | Description | Reqd. QTY CBR1000RR 4 | 5 | 6 | 7 | Serial No. | Parts catalogue code |
|---|---|---|---|---|---|---|---|---|
| 12 | 35162-MN5-003 | COLLAR | - | - | 2 | 2 | | |
| 13 | 35163-MN5-003 | GROMMET | - | - | 2 | 2 | | |
| 14 | 38301-MBW-D21 | RELAY COMP., WINKER (DENSO) | - | - | 1 | 1 | -------- -------- | MX |
| | 38301-MEW-921 | RELAY COMP., WINKER | - | - | 1 | 1 | -------- -------- | BR,E,ED,EK,F,KO,U,2ED,2F,3E,4EK |
| 15 | 38306-GE7-000 | SUSPENSION, WINKER RELAY | - | - | 1 | 1 | | |
| 16 | 38501-MEL-000 | RELAY ASSY., POWER (MICRO ISO 4P) | - | - | 4 | 4 | | |
| 17 | 38770-MEL-B21 | PGM-FI UNIT | - | - | 1 | 1 | -------- -------- | BR |
| | 38770-MEL-D21 | | - | - | 1 | 1 | -------- -------- | E,ED,EK,U,2ED,3E,4EK |
| | 38770-MEL-F21 | | - | - | 1 | 1 | -------- -------- | F,2F |
| | 38770-MEL-K21 | | - | - | 1 | 1 | -------- -------- | KO |
| | 38770-MEL-M22 | | - | - | 1 | - | -------- -------- | MX |
| | 38770-MEL-M23 | | - | - | - | 1 | -------- -------- | MX |
| 18 | 80101-283-000 | RUBBER, RR. FENDER CUSHION | - | - | 1 | 1 | | |
| 19 | 80105-MW3-600 | STAY, FUSE BOX | - | - | 1 | 1 | | |
| 20 | 84706-163-670 | COLLAR, TAILLIGHT MOUNTING | - | - | 1 | 1 | | |
| 21 | 90076-MG8-000 | BOLT, FLANGE SOCKET, 6X28 | - | - | 2 | 2 | | |
| 22 | 90106-MCE-000 | SCREW, PAN, 6X12 | - | - | 1 | 1 | | |
| 23 | 90118-MEL-000 | SCREW, PAN, 6X20 | - | - | 1 | 1 | | |
| 24 | 90525-428-900 | WASHER, PLAIN, 6MM | - | - | 1 | 1 | | |
| 25 | 90620-SB2-003 | BAND, WIRE HARNESS | - | - | 1 | - | -------- -------- | BR,E,ED,EK,F,KO,U |
| | | | - | - | 2 | - | -------- -------- | MX |
| | | | - | - | - | 1 | | |
| 26 | 90652-KT1-771 | BAND, WIRE (BLACK) | - | - | 1 | - | | |
| 27 | 90681-763-A01 | CLIP, WIRE HARNESS | - | - | 1 | 1 | | |
| 28 | 91541-SOA-003 | CLIP, HARNESS BAND (BLACK) (145MM) | - | - | 1 | - | -------- -------- | MX |
| | 90650-MA6-720 | BAND, WIRE HARNESS | - | - | - | 1 | -------- -------- | MX |
| 29 | 91565-SEL-003 | CLIP, COUPLER (BLACK) | - | - | 1 | 1 | | |
| 30 | 94050-04000 | NUT, FLANGE, 4MM | - | - | 2 | 2 | | |
| 32 | 96300-06012-07 | BOLT, FLANGE, 6X12 | - | - | 1 | - | | |
| | 96001-06012-07 | | - | - | - | 1 | | |
| 33 | 98200-41000 | FUSE, MINI (10A) | - | - | 5 | 5 | | |
| 34 | 98200-42000 | FUSE, MINI (20A) | - | - | 3 | 3 | | |
| 37 | 32171-MEB-670 | PURSE, LOCK | - | - | - | 1 | | |

# FRAME BODY

N 1

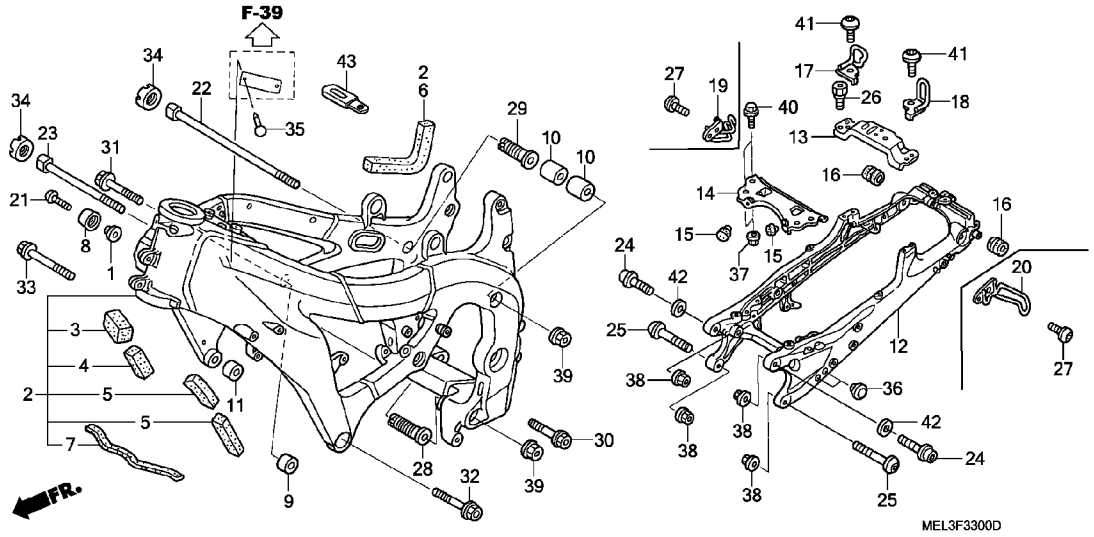


| Ref. No. | L.O.N. | (Relative ref. Number) Description | F.R.T. |
|---|---|---|---|
| 2 | 410100 | BODY, FRAME ..... | 8.8 |
| | | .INCLUDES: Engine removal and installation | |
| 12 | 410157 | SEAT RAIL ..... | 2.5 |
| 13 | 4101J6 | PLATE, CENTER CROSS ..... | 0.2 |
| 14 | 4131B1 | PLATE, FRONT CROSS ..... | 0.4 |
| 19 | 4101J7 | GUIDE, HOOK :RIGHT ..... | 0.2 |
| | 4101S8 | GUIDE, HOOK :BOTH ..... | 0.2 |
| 20 | 4101J8 | GUIDE, HOOK :LEFT ..... | 0.2 |
| | 4101S8 | GUIDE, HOOK :BOTH ..... | 0.2 |

| Ref. No. | Part No. | Description | Reqd. QTY CBR1000RR 4 | 5 | 6 | 7 | Serial No. | | Parts catalogue code |
|---|---|---|---|---|---|---|---|---|---|
| 1 | 19621-ZG3-880 | COLLAR, FAN COVER ..... | 1 | 1 | 1 | 1 | | | |
| 2 | 50010-MEL-670ZA | BODY ASSY., FRAME | | | | | | | |
| | | *NH461M*TEMPLE BLACK METALLIC | 1 | - | - | - | -------- | -------- | BR,KO,MX |
| | | | - | 1 | - | - | -------- | 5M100137 | BR,KO,MX,2KO |
| | 50010-MEL-000ZA | *NH461M*TEMPLE BLACK METALLIC | 1 | - | - | - | -------- | -------- | E,ED,F,G,U |
| | | | - | 1 | - | - | -------- | 5M100639 | U,2U |
| | | | - | 1 | - | - | -------- | 5M100791 | F,2F |
| | | | - | 1 | - | - | -------- | 5M102525 | G,2G |
| | | | - | 1 | - | - | -------- | 5M107940 | E,ED,EK,2ED,3E,4EK |
| | 50010-MEL-671ZA | *NH461M*TEMPLE BLACK METALLIC | - | 1 | - | - | 5M100138 | -------- | BR,KO,MX,2KO |
| | 50010-MEL-010ZA | *NH461M*TEMPLE BLACK METALLIC | - | 1 | - | - | 5M100640 | -------- | U,2U |
| | | | - | 1 | - | - | 5M100792 | -------- | F,2F |
| | | | - | 1 | - | - | 5M102526 | -------- | G,2G |
| | | | - | 1 | - | - | 5M107941 | -------- | E,ED,EK,2ED,3E,4EK |
| | 50010-MEL-B20ZA | BODY SET, FRAME | | | | | | | |
| | | *NH461M*TEMPLE BLACK METALLIC | - | - | 1 | - | -------- | -------- | BR,KO,MX |
| | 50010-MEL-D20ZA | *NH461M*TEMPLE BLACK METALLIC | - | - | 1 | - | -------- | -------- | E,ED,EK,F,U |
| | 50010-MEL-B30ZA | *NH461M*TEMPLE BLACK METALLIC | - | - | - | 1 | -------- | -------- | BR,KO,MX |
| | 50010-MEL-D30ZA | *NH461M*TEMPLE BLACK METALLIC | - | - | - | 1 | -------- | -------- | E,ED,EK,F,U,2ED,2F,3E,4EK |
| 3 | 50131-MEL-300 | MAT A, R. ENGINE HANGER ..... | 1 | 1 | 1 | 1 | | | |
| 4 | 50132-MEL-300 | MAT B, R. ENGINE HANGER ..... | 1 | 1 | 1 | 1 | | | |
| 5 | 50133-MEL-300 | MAT, L. ENGINE HANGER ..... | 2 | 2 | 2 | 2 | | | |
| 6 | 50134-MEL-300 | MAT, R. PIVOT PLATE ..... | 1 | 1 | 1 | 1 | | | |
| 7 | 50135-MEL-300 | MAT, RAM DUCT ..... | 1 | 1 | 1 | 1 | | | |
| 8 | 50141-MEL-000 | GUARD, WATER PIPE ..... | 1 | 1 | 1 | 1 | | | |
| 9 | 50191-MEL-000 | COLLAR B, ENGINE HANGER ..... | 1 | 1 | - | - | | | |
| | 50193-MEL-000 | COLLAR A, ENGINE HANGER ..... | - | - | 1 | 1 | | | |
| 10 | 50192-MEL-000 | COLLAR C, ENGINE HANGER ..... | 2 | 2 | 2 | 2 | | | |

# F-33 FRAME BODY

N 2

| Ref. No. | Part No. | Description | Reqd. QTY CBR1000RR 4 | 5 | 6 | 7 | Serial No. | Parts catalogue code |
|---|---|---|---|---|---|---|---|---|
| 11 | 50193-MEL-000 | COLLAR A, ENGINE HANGER ····· | 1 | 1 | 1 | 1 | | |
| 12 | 50200-MEL-010ZA | RAIL ASSY., SEAT | | | | | | |
| | | *NH461M*TEMPLE BLACK METALLIC | 1 | 1 | - | - | | |
| | 50200-MEL-D20ZA | *NH461M*TEMPLE BLACK METALLIC | - | - | 1 | 1 | | |
| 13 | 50204-MEL-000 | PLATE, CENTER CROSS ····· | 1 | 1 | 1 | 1 | | |
| 14 | 50214-MEL-000 | PLATE, FR. CROSS ····· | 1 | 1 | 1 | 1 | | |
| 15 | 50352-GS6-000 | RUBBER, LINK STOPPER ····· | 2 | 2 | 2 | 2 | | |
| 16 | 45146-300-000 | GROMMET, BRAKE HOSE ····· | 2 | - | - | - | | |
| | 45146-MEL-D00 | ····· | - | 2 | 2 | 2 | | |
| 17 | 77105-MEL-000 | GUIDE, R. HOOK ····· | 1 | 1 | - | - | | |
| | 77105-MEL-D20 | ····· | - | - | 1 | 1 | | |
| 18 | 77106-MEL-000 | GUIDE, L. HOOK ····· | 1 | 1 | - | - | | |
| | 77106-MEL-D20 | ····· | - | - | 1 | 1 | | |
| 19 | 84110-MEL-000 | HOOK, R. ROPE ····· | 1 | 1 | - | - | | |
| 20 | 84120-MEL-000 | HOOK, L. ROPE ····· | 1 | 1 | - | - | | |
| 21 | 90085-MAJ-A20 | BOLT, SPECIAL, 6X22 ····· | 1 | 1 | 1 | 1 | | |
| 22 | 90101-MEL-000 | BOLT, SPECIAL, 12X311 ····· | 1 | 1 | 1 | 1 | | |
| 23 | 90102-MEL-000 | BOLT, SPECIAL, 12X280 ····· | 1 | 1 | 1 | 1 | | |
| 24 | 90109-MEL-000 | BOLT, FLANGE SOCKET, 10X38 ·· | 2 | 2 | 2 | 2 | | |
| 25 | 90110-MEL-000 | BOLT, SPECIAL, 10X41.5 ····· | 2 | 2 | 2 | 2 | | |
| 26 | 90115-MJ1-830 | BOLT, SPECIAL, 8MM ····· | 2 | 2 | 2 | 2 | | |
| 27 | 90128-KBP-900 | BOLT, SOCKET, 8X16 ····· | 2 | 2 | - | - | | |
| 28 | 90151-MEL-000 | BOLT, ADJUSTING, 20X68.5 ···· | 1 | 1 | 1 | 1 | | |
| 29 | 90152-MEL-000 | BOLT, ADJUSTING, 20X51.5 ···· | 1 | 1 | 1 | 1 | | |
| 30 | 90161-MEL-000 | BOLT, FLANGE, 12X55 ····· | 1 | 1 | - | - | | |
| | 90161-MEL-D20 | ····· | - | - | 1 | 1 | | |
| 31 | 90162-MEL-000 | BOLT, FLANGE, 12X70 ····· | 1 | 1 | - | - | | |
| | 90162-MEL-D20 | ····· | - | - | 1 | 1 | | |
| 32 | 90163-MEL-000 | BOLT, FLANGE, 12X50 ····· | 1 | 1 | 1 | 1 | | |
| 33 | 90164-MEL-000 | BOLT, FLANGE, 12X60 ····· | 1 | 1 | 1 | 1 | | |
| 34 | 90201-MW0-000 | NUT, LOCK, 20MM ····· | 2 | 2 | 2 | 2 | | |
| 35 | 90841-001-000 | SCREW, RIVET, 1.8X5 ····· | 2 | 2 | 2 | 2 | -------- -------- | E,ED,EK,F,G,2ED,2F,2G,3E,4EK |
| 36 | 91456-ME1-670 | CAP, SOCKET BOLT, 10MM ····· | 4 | 4 | 4 | 4 | | |
| 37 | 94050-06000 | NUT, FLANGE, 6MM ····· | 4 | 4 | - | - | | |
| 38 | 94050-10000 | NUT, FLANGE, 10MM ····· | 4 | 4 | 4 | 4 | | |
| 39 | 94050-12000 | NUT, FLANGE, 12MM ····· | 2 | 2 | 2 | 2 | | |
| 40 | 96300-06018-00 | BOLT, FLANGE, 6X18 ····· | 4 | 4 | - | - | | |
| | 96300-06014-00 | BOLT, FLANGE, 6X14 ····· | - | - | 4 | 4 | | |
| 41 | 96300-08022-00 | BOLT, FLANGE, 8X22 ····· | 2 | - | - | - | -------- -------- | KO |
| | 90128-KET-900 | BOLT, SOCKET, 8X22 ····· | 2 | - | - | - | -------- -------- | BR,E,ED,F,G,MX,U |
| | | | - | 2 | 2 | 2 | | |
| 42 | 90401-430-000 | WASHER, 10.2MM ····· | - | - | 2 | - | -------- -------- | KO,MX,U |
| | | | - | - | - | 2 | | |
| 43 | 32925-958-000 | CLIP, PULSER CORD ····· | - | - | - | 1 | | |

3

# TOOLS



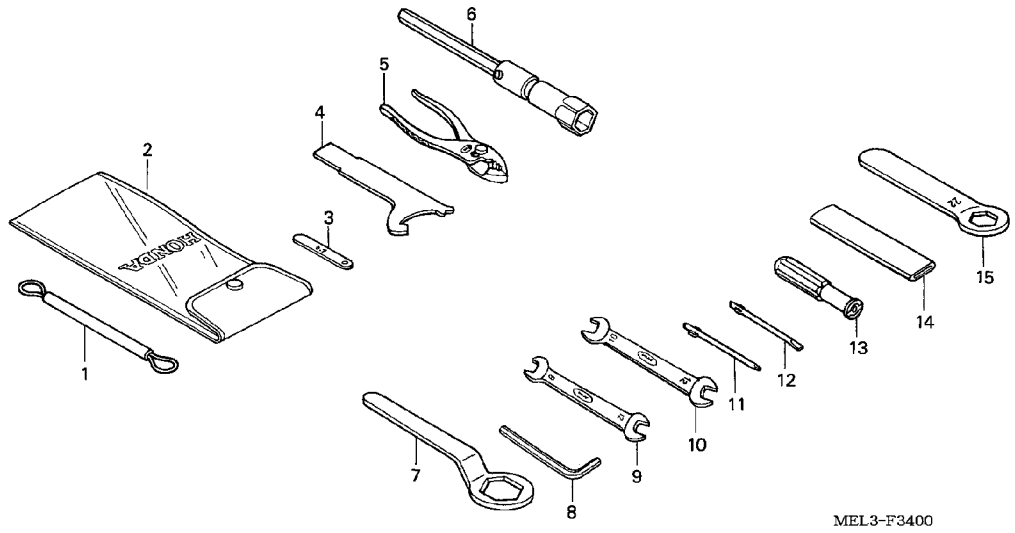


| Ref. No. | L.O.N. | (Relative ref. Number) Description | F.R.T. |
|---|---|---|---|
| | | NO INFORMATION ····· | |

| Ref. No. | Part No. | Description | Reqd. QTY CBR1000RR 4 | 5 | 6 | 7 | Serial No. | Parts catalogue code |
|---|---|---|---|---|---|---|---|---|
| 1 | 77236-KAZ-780 | WIRE, HELMET SET ····· | 1 | 1 | 1 | 1 | | |
| 2 | 89101-300-010 | BAG, TOOL ····· | 1 | 1 | 1 | 1 | | |
| 3 | 89103-371-000 | GAUGE, FEELER, 0.7MM ····· | 1 | 1 | 1 | 1 | | |
| 4 | 89202-KY1-700 | SPANNER, PIN ····· | 1 | 1 | 1 | 1 | | |
| 5 | 89210-GBJ-J00 | PLIERS, 135(RIKEN) ····· | 1 | 1 | 1 | 1 | | |
| | 89210-GBJ-J10 | PLIERS, 135(KOWA) ····· | 1 | 1 | 1 | 1 | | |
| | 99002-13500 | PLIERS, 135 ····· | 1 | 1 | 1 | 1 | | |
| 6 | 89216-MBG-000 | WRENCH, PLUG, 16.5 ····· | 1 | 1 | 1 | 1 | | |
| 7 | 89218-MAZ-000 | WRENCH, EYE, 32 ····· | 1 | 1 | 1 | 1 | | |
| 8 | 89221-429-000 | WRENCH, HEX., 5MM ····· | 1 | 1 | 1 | 1 | | |
| 9 | 99001-08120 | SPANNER, 8X12 ····· | 1 | 1 | 1 | 1 | | |
| 10 | 99001-10120 | SPANNER, 10X12 ····· | 1 | 1 | 1 | 1 | | |
| 11 | 99003-10000 | DRIVER PLUS SCREW 1,(NO.2) ·· | 1 | 1 | 1 | 1 | | |
| 12 | 99003-30000 | DRIVER MINUS SCREW 3,(NO.2) · | 1 | 1 | 1 | 1 | | |
| 13 | 99003-50000 | GRIP, SCREW DRIVER ····· | 1 | 1 | 1 | 1 | | |
| 14 | 99006-12000 | HANDLE, EYE WRENCH, 12MM ···· | 1 | 1 | 1 | 1 | | |
| 15 | 99006-22000 | WRENCH, EYE, 22MM ····· | 1 | 1 | 1 | 1 | | |

# F-35 RADIATOR (CBR1000RR4/5)

N 4

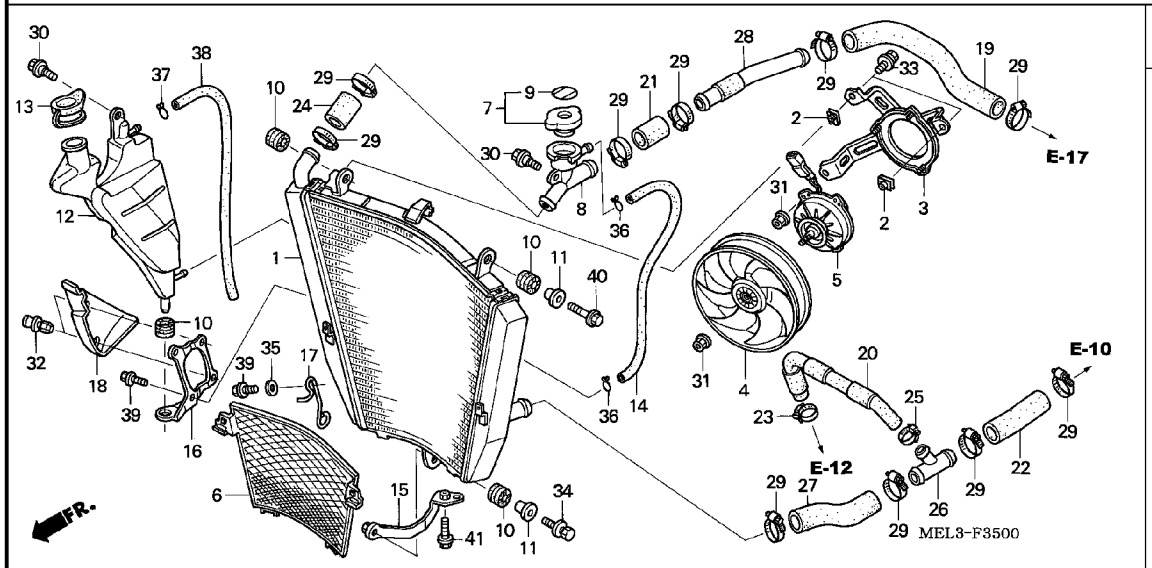


| Ref. No. | L.O.N. | (Relative ref. Number) Description | F.R.T. |
|---|---|---|---|
| 1 | 1151C3 | RADIATOR | 1.0 |
| 3 | 115125 | SHROUD, RADIATOR | 0.7 |
| 4 | 1151A6 | FAN, COOLING | 0.7 |
| 5 | 1151A7 | MOTOR, FAN | 0.8 |
| 6 | 1151B1 | GRILLE, RADIATOR | 0.3 |
| 7 | 1151B8 | CAP, RADIATOR | 0.2 |
| 8 | 1151D4 | NECK, FILLER | 0.8 |
| 12 | 115110 | TANK, RADIATOR RESERVE | 0.4 |
| 14 | 1151E5 | TUBE, RADIATOR RESERVE TANK | 0.7 |
| 19 | 1151A3 | HOSE A, RADIATOR :RIGHT | 1.1 |
| 20 | 1131B1 | HOSE, OIL COOLER WATER | 0.8 |
| 21 | 114130 | HOSE A, WATER | 0.7 |
| 22 | 1151A4 | HOSE A, RADIATOR :LEFT | 0.7 |
| 24 | 1151B9 | HOSE, FILLER NECK | 0.7 |
| 26 | 1151F1 | JOINT, 3WAY HOSE :LOWER | 0.7 |
| 27 | 1151A1 | HOSE B, RADIATOR :LEFT | 0.7 |
| 28 | 1141A2 | PIPE, WATER :RIGHT | 0.7 |

| Ref. No. | Part No. | Description | Reqd. QTY CBR1000RR 4 | 5 | 6 | 7 | Serial No. | Parts catalogue code |
|---|---|---|---|---|---|---|---|---|
| 1 | 19010-MEL-003 | RADIATOR COMP. | 1 | - | - | - | | |
| | 19010-MEL-D01 | | - | 1 | - | - | | |
| 2 | 19014-KEA-003 | NUT, SETTING | 2 | 2 | - | - | | |
| 3 | 19015-MEL-003 | SHROUD COMP. | 1 | 1 | - | - | | |
| 4 | 19020-MAT-E02 | FAN COMP., COOLING | 1 | 1 | - | - | | |
| 5 | 19030-MEL-003 | MOTOR ASSY., FAN | 1 | 1 | - | - | | |
| 6 | 19032-MEL-000 | GRILLE, RADIATOR | 1 | 1 | - | - | | |
| 7 | 19037-GEE-710 | CAP COMP., RADIATOR | 1 | 1 | - | - | | |
| 8 | 19039-MEL-003 | NECK, FILLER | 1 | 1 | - | - | | |
| 9 | 19046-PAA-A00 | LABEL, RADIATOR CAP | 1 | 1 | - | - | | |
| 10 | 19051-KA3-830 | RUBBER, RADIATOR MOUNTING | 4 | 4 | - | - | | |
| 11 | 19052-MAC-680 | COLLAR, RADIATOR MOUNTING | 2 | 2 | - | - | | |
| 12 | 19101-MEL-000 | TANK, RADIATOR RESERVE | 1 | 1 | - | - | | |
| 13 | 19104-MB0-700 | CAP, RESERVE TANK | 1 | 1 | - | - | | |
| 14 | 19104-MEL-000 | TUBE, RESERVE TANK FILLER | 1 | 1 | - | - | | |
| 15 | 19113-MEL-000 | STAY, RADIATOR LOWER | 1 | 1 | - | - | | |
| 16 | 19117-MEL-000 | BRACKET, RESERVE TANK | 1 | 1 | - | - | | |
| 17 | 19119-MEL-000 | CLAMP, OVER FLOW | 1 | 1 | - | - | | |
| 18 | 19125-MEL-000 | GUIDE, FAN AIR | 1 | 1 | - | - | | |
| 19 | 19501-MEL-000 | HOSE A, R. RADIATOR | 1 | 1 | - | - | | |
| 20 | 19502-MEL-000 | HOSE, OIL COOLER | 1 | 1 | - | - | | |
| 21 | 19503-MCT-000 | HOSE A, WATER | 1 | 1 | - | - | | |
| 22 | 19503-MEL-000 | HOSE A, L. RADIATOR | 1 | 1 | - | - | | |
| 23 | 19504-KT7-751 | CLAMP, HOSE, 25MM | 1 | 1 | - | - | | |
| 24 | 19504-MEL-000 | HOSE, FILLER NECK | 1 | 1 | - | - | | |

3

# RADIATOR (CBR1000RR4/5)



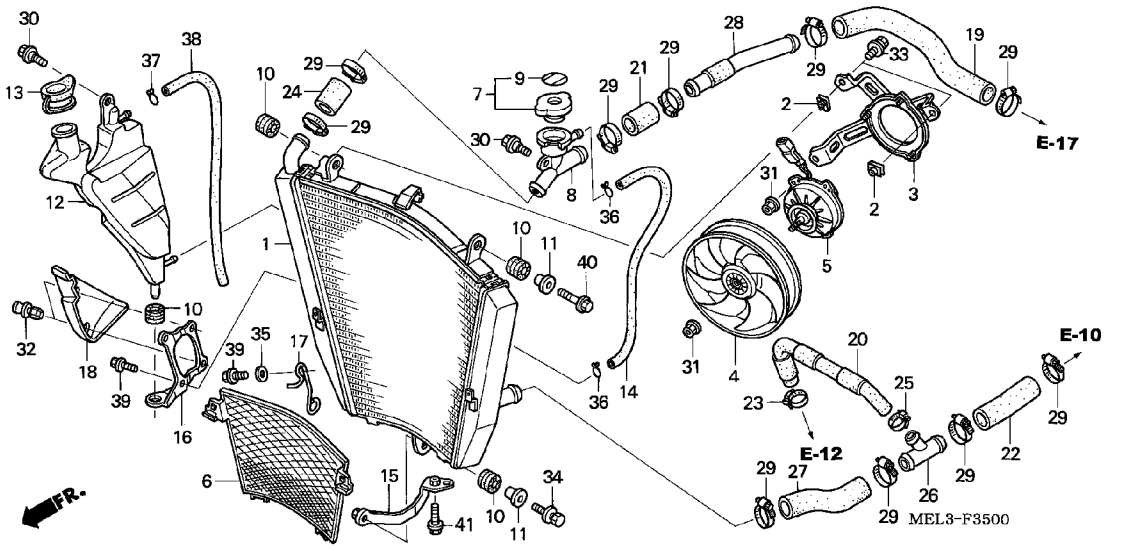


| Ref. No. | Part No. | Description | Reqd. QTY CBR1000RR 4 | 5 | 6 | 7 | Serial No. | Parts catalogue code |
|---|---|---|---|---|---|---|---|---|
| 25 | 19505-KS6-700 | CLAMP A, WATER HOSE ..... | 1 | 1 | - | - | | |
| 26 | 19507-MEE-000 | JOINT, HOSE THREE-WAY ..... | 1 | 1 | - | - | | |
| 27 | 19508-MEL-000 | HOSE B, L. RADIATOR ..... | 1 | 1 | - | - | | |
| 28 | 19509-MEL-000 | PIPE, WATER ..... | 1 | 1 | - | - | | |
| 29 | 19516-GAG-003 | CLAMP, HOSE, 30-37MM ..... | 10 | 10 | - | - | | |
| 30 | 90111-187-000 | BOLT, FLANGE, 6MM ..... | 2 | 2 | - | - | | |
| 31 | 90315-MK3-003 | NUT, SERRATE, 5MM ..... | 4 | 4 | - | - | | |
| 32 | 91549-MW0-790ZA | CLIP, PANEL FIXING *NH1*.....BLACK | 2 | 2 | - | - | | |
| 33 | 93401-06012-08 | BOLT-WASHER, 6X12 ..... | 3 | 3 | - | - | | |
| 34 | 93404-06025-00 | BOLT-WASHER, 6X25 ..... | 1 | 1 | - | - | | |
| 35 | 94101-06000 | WASHER, PLAIN, 6MM ..... | 1 | 1 | - | - | | |
| 36 | 95002-02100 | CLIP, TUBE (B10) ..... | 2 | 2 | - | - | | |
| 37 | 95002-50000 | CLIP, TUBE (C9) ..... | 1 | 1 | - | - | | |
| 38 | 95005-50550-30 | TUBE, 5X550(95005-50001-30M) | 1 | - | - | - | -------- -------- | F,G |
| | | | 1 | - | - | - | -------- 4M000291 | BR,KO,MX |
| | | | 1 | - | - | - | -------- 4M000847 | U |
| | | | 1 | - | - | - | -------- 4M010931 | E,ED |
| | 95005-50540-30 | TUBE, 5X540(95005-50001-30M) | 1 | - | - | - | 4M000292 -------- | BR,KO,MX |
| | | | 1 | - | - | - | 4M000848 -------- | U |
| | | | 1 | - | - | - | 4M010932 -------- | E,ED |
| | | | - | 1 | - | - | | |
| 39 | 96001-06010-00 | BOLT, FLANGE, 6X10 ..... | 3 | 3 | - | - | | |
| 40 | 96001-06025-00 | BOLT, FLANGE, 6X25 ..... | 1 | 1 | - | - | | |
| 41 | 96300-06020-00 | BOLT, FLANGE, 6X20 ..... | 1 | 1 | - | - | | |

# F-35-1 RADIATOR (CBR1000RR6/7)

N 6

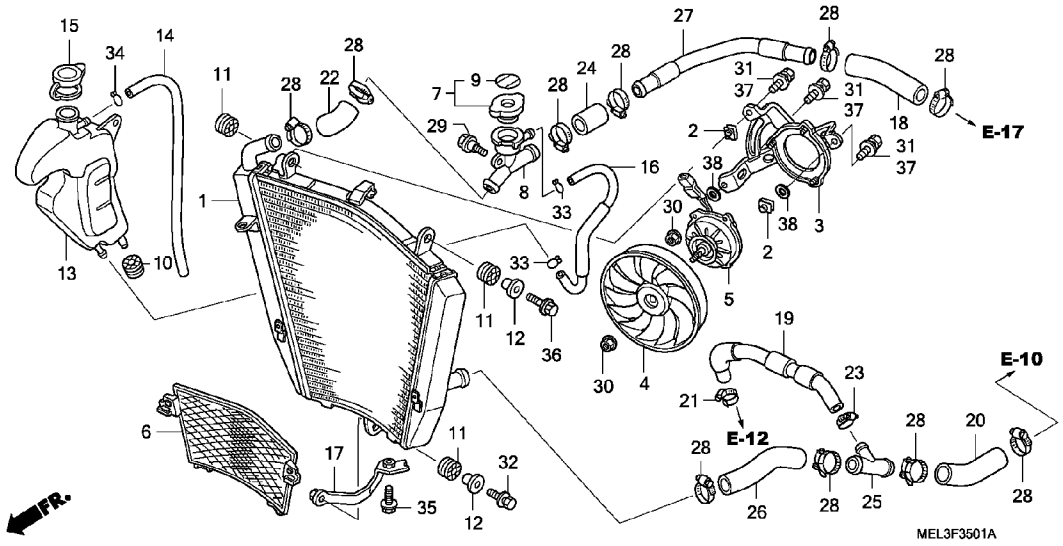


| Ref. No. | L.O.N. | (Relative ref. Number) Description | F.R.T. |
|---|---|---|---|
| 1 | 1151C3 | RADIATOR | 1.1 |
| 3 | 115125 | SHROUD, RADIATOR | 0.7 |
| 4 | 1151A6 | FAN, COOLING | 0.7 |
| 5 | 1151A7 | MOTOR, FAN | 0.8 |
| 6 | 1151B1 | GRILLE, RADIATOR | 0.3 |
| 8 | 1151D4 | NECK, FILLER | 0.9 |
| 13 | 11511O | TANK, RADIATOR RESERVE | 0.5 |
| 16 | 1151E5 | TUBE, RADIATOR RESERVE TANK | 0.8 |
| 18 | 1151A3 | HOSE A, RADIATOR :RIGHT | 1.2 |
| 19 | 1131B1 | HOSE, OIL COOLER WATER | 0.9 |
| 20 | 1151A4 | HOSE A, RADIATOR :LEFT | 0.8 |
| 22 | 1151B9 | HOSE, FILLER NECK | 0.8 |
| 24 | 114132 | HOSE C, WATER | 0.8 |
| 25 | 1151F1 | JOINT, 3WAY HOSE :LOWER | 0.8 |
| 26 | 1151A1 | HOSE B, RADIATOR :LEFT | 1.0 |
| 27 | 1141A2 | PIPE, WATER :RIGHT | 0.8 |

| Ref. No. | Part No. | Description | Reqd. QTY CBR1000RR 4 | 5 | 6 | 7 | Serial No. | Parts catalogue code |
|---|---|---|---|---|---|---|---|---|
| 1 | 19010-MEL-D21 | RADIATOR COMP. | - | - | 1 | 1 | | |
| 2 | 19014-KEA-003 | NUT, SETTING | - | - | 2 | 2 | | |
| 3 | 19015-MEL-D21 | SHROUD COMP. | - | - | 1 | 1 | | |
| 4 | 19020-MFA-D01 | FAN COMP., COOLING | - | - | 1 | 1 | | |
| 5 | 19030-MEL-D21 | MOTOR ASSY., FAN | - | - | 1 | 1 | | |
| 6 | 19032-MEL-D20 | GRILL, RADIATOR | - | - | 1 | 1 | | |
| 7 | 19037-GEE-710 | CAP COMP., RADIATOR | - | - | 1 | 1 | | |
| 8 | 19039-MEL-003 | NECK, FILLER | - | - | 1 | 1 | | |
| 9 | 19046-PAA-A00 | LABEL, RADIATOR CAP | - | - | 1 | 1 | | |
| 10 | 19051-KA3-710 | RUBBER, RADIATOR MOUNTING | - | - | 1 | 1 | | |
| 11 | 19051-KA3-830 | RUBBER, RADIATOR MOUNTING | - | - | 3 | 3 | | |
| 12 | 19052-MAC-680 | COLLAR, RADIATOR MOUNTING | - | - | 2 | 2 | | |
| 13 | 19101-MEL-D20 | TANK, RADIATOR RESERVE | - | - | 1 | 1 | | |
| 14 | 19103-MEL-D20 | TUBE, OVERFLOW | - | - | 1 | 1 | | |
| 15 | 19104-MB0-700 | CAP, RESERVE TANK | - | - | 1 | 1 | | |
| 16 | 19104-MEL-D20 | TUBE, RESERVE TANK FILLER | - | - | 1 | 1 | | |
| 17 | 19113-MEL-D20 | STAY, RADIATOR LOWER | - | - | 1 | 1 | | |
| 18 | 19501-MEL-D20 | HOSE A, R. RADIATOR | - | - | 1 | 1 | | |
| 19 | 19502-MEL-D20 | HOSE, OIL COOLER | - | - | 1 | 1 | | |
| 20 | 19503-MEL-D20 | HOSE A, L. RADIATOR | - | - | 1 | 1 | | |
| 21 | 19504-KT7-751 | CLAMP, HOSE, 25MM | - | - | 1 | 1 | | |
| 22 | 19504-MEL-D20 | HOSE, FILLER NECK | - | - | 1 | 1 | | |
| 23 | 19505-KS6-700 | CLAMP A, WATER HOSE | - | - | 1 | 1 | | |
| 24 | 19506-MEL-D20 | HOSE C, WATER | - | - | 1 | 1 | | |
| 25 | 19507-MEE-000 | JOINT, HOSE THREE-WAY | - | - | 1 | 1 | | |

3

# RADIATOR (CBR1000RR6/7)



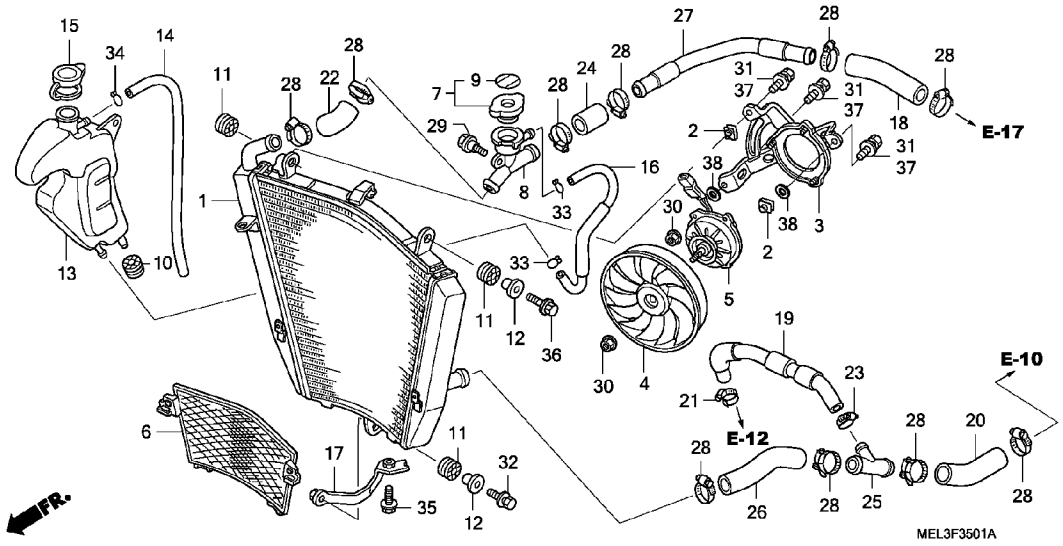


| Ref. No. | Part No. | Description | Reqd. QTY CBR1000RR 4 | 5 | 6 | 7 | Serial No. | Parts catalogue code |
|---|---|---|---|---|---|---|---|---|
| 26 | 19508-MEL-D20 | HOSE B, L. RADIATOR ..... | - | - | 1 | 1 | | |
| 27 | 19509-MEL-D20 | PIPE, WATER ..... | - | - | 1 | 1 | | |
| 28 | 19516-GAG-003 | CLAMP, HOSE, 30-37MM ..... | - | - | 10 | 10 | | |
| 29 | 90111-187-000 | BOLT, FLANGE, 6MM ..... | - | - | 1 | - | | |
| | 90111-162-000 | ..... | - | - | - | 1 | | |
| 30 | 90315-MK3-003 | NUT, SERRATE, 5MM ..... | - | - | 4 | 4 | | |
| 31 | 93401-06012-08 | BOLT-WASHER, 6X12 ..... | - | - | (3) | - | -------- 6M200096 | KO |
| | | | - | - | (3) | - | -------- 6M200726 | U |
| | | | - | - | (3) | - | -------- 6M200791 | BR,MX |
| | | | - | - | (3) | - | -------- 6M201396 | F |
| | | | - | - | (3) | - | -------- 6M214729 | E,ED,EK |
| | | | - | - | 3 | - | 6M200097 -------- | KO |
| | | | - | - | 3 | - | 6M200727 -------- | U |
| | | | - | - | 3 | - | 6M200792 -------- | BR,MX |
| | | | - | - | 3 | - | 6M201397 -------- | F |
| | | | - | - | 3 | - | 6M214730 -------- | E,ED,EK |
| | | | - | - | - | 3 | | |
| 32 | 93404-06025-00 | BOLT-WASHER, 6X25 ..... | - | - | 1 | 1 | | |
| 33 | 95002-02100 | CLIP, TUBE (B10) ..... | - | - | 2 | 2 | | |
| 34 | 95002-50000 | CLIP, TUBE (C9) ..... | - | - | 1 | 1 | | |
| 35 | 96001-06020-00 | BOLT, FLANGE, 6X20 ..... | - | - | 1 | 1 | | |
| 36 | 96001-06025-00 | BOLT, FLANGE, 6X25 ..... | - | - | 1 | 1 | | |
| 37 | 90104-MEL-305 | BOLT, WASHER, 6X14 ..... | - | - | (3) | - | -------- 6M200096 | KO |
| | | | - | - | (3) | - | -------- 6M200726 | U |
| | | | - | - | (3) | - | -------- 6M200791 | BR,MX |
| | | | - | - | (3) | - | -------- 6M201396 | F |
| | | | - | - | (3) | - | -------- 6M214729 | E,ED,EK |

# RADIATOR (CBR1000RR6/7)



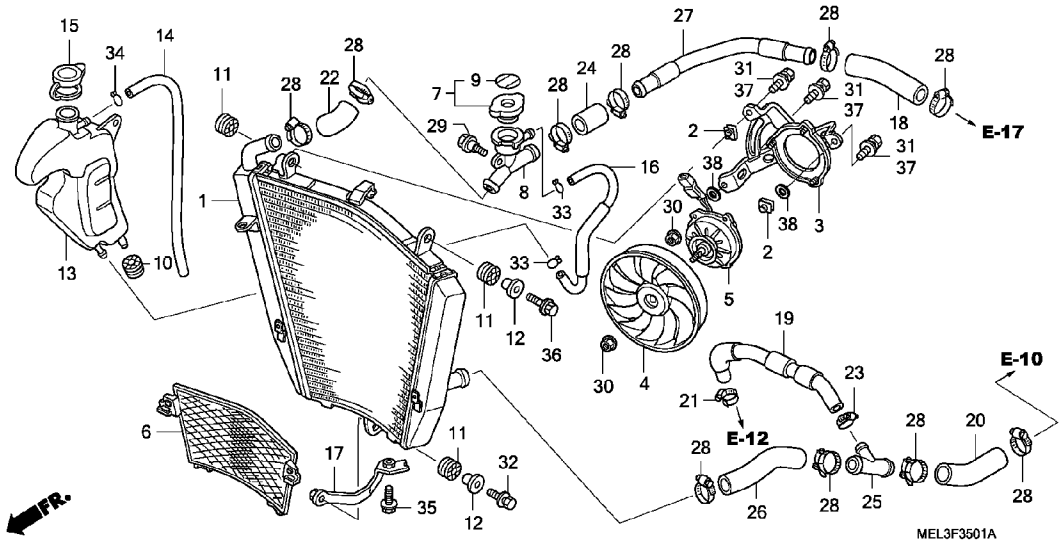


| Ref. No. | Part No. | Description | Reqd. QTY CBR1000RR 4 | 5 | 6 | 7 | Serial No. | Parts catalogue code |
|---|---|---|---|---|---|---|---|---|
| 38 | 90502-MEL-305 | WASHER, 6MM ---------- | - | - | (2) | - | -------- | 6M200096 KO |
| | | | - | - | (2) | - | -------- | 6M200726 U |
| | | | - | - | (2) | - | -------- | 6M200791 BR,MX |
| | | | - | - | (2) | - | -------- | 6M201396 F |
| | | | - | - | (2) | - | -------- | 6M214729 E,ED,EK |

# UPPER COWL (CBR1000RR4/5)



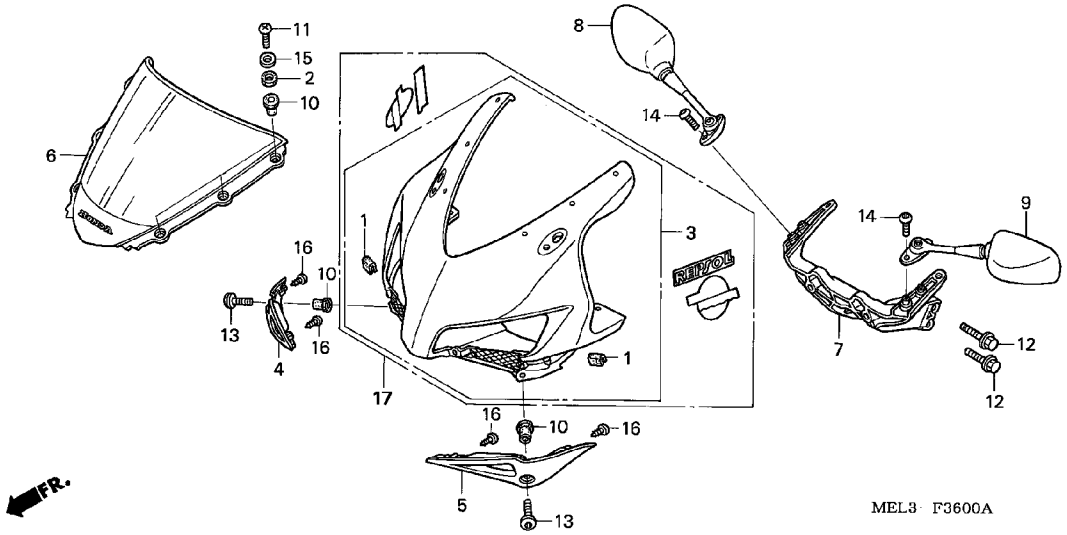


| Ref. No. | L.O.N. | (Relative ref. Number) Description | F.R.T. |
|---|---|---|---|
| 3 | | (17) | |
| | 4111B4 | COWL, UPPER ---------- | 0.8 |
| 4 | 4111G5 | COVER, AIR INTAKE :RIGHT ----- | 0.6 |
| | 4111N2 | COVER, AIR INTAKE :BOTH ------ | 0.6 |
| 5 | 4111G4 | COVER, AIR INTAKE :LEFT ------ | 0.6 |
| | 4111N2 | COVER, AIR INTAKE :BOTH ------ | 0.6 |
| 6 | 411115 | WINDSCREEN SET ---------- | 0.2 |
| 7 | 4111G6 | STAY A, UPPER COWL ---------- | 0.6 |
| 8 | 4131L0 | MIRROR, BACK :RIGHT ---------- | 0.1 |
| | 4131S3 | MIRROR, BACK :BOTH ---------- | 0.1 |
| 9 | 4131K9 | MIRROR, BACK :LEFT ---------- | 0.1 |
| | 4131S3 | MIRROR, BACK :BOTH ---------- | 0.1 |

| Ref. No. | Part No. | Description | Reqd. QTY CBR1000RR 4 | 5 | 6 | 7 | Serial No. | | Parts catalogue code |
|---|---|---|---|---|---|---|---|---|---|
| 1 | 64121-MEJ-000 | RUBBER, PROTECTOR ---------- | 2 | 2 | - | - | | | |
| 2 | 64205-166-610 | WASHER, SCREEN SETTING ------ | 6 | 6 | - | - | | | |
| 3 | 64211-MEL-000ZA | COWL COMP., UPPER | | | | | | | |
| | | *NH1*.....BLACK | 1 | - | - | - | -------- | -------- | E,ED,F,G,KO,MX,U |
| | 64211-MEL-000ZB | *R258*.....WINNING RED | 1 | - | - | - | | | |
| | 64211-MEL-000ZC | *NH411M*FORCE SILVER METALLIC | 1 | - | - | - | -------- | -------- | BR,MX |
| | 64211-MEL-D00ZA | *NH1*.....BLACK | - | 1 | - | - | -------- | -------- | BR,E,ED,EK,F,G,KO,MX,U |
| | 64211-MEL-D00ZB | *R258*.....WINNING RED | - | 1 | - | - | -------- | -------- | BR,E,ED,EK,F,G,KO,MX,U |
| | 64211-MEL-D00ZC | *YR183M*....TITANIUM METALLIC | - | 1 | - | - | -------- | -------- | BR,MX,U |
| | 64211-MEL-D00ZD | *PB215C*..CANDY TAHITIAN BLUE | - | 1 | - | - | -------- | -------- | E,ED,EK,F,G |
| 4 | 64230-MEL-000 | COVER, R. AIR INTAKE -------- | 1 | 1 | - | - | | | |
| 5 | 64240-MEL-000 | COVER, L. AIR INTAKE -------- | 1 | 1 | - | - | | | |
| 6 | 64250-MEL-000ZA | WINDSCREEN SET *TYPE1*(WL) -- | 1 | - | - | - | | | |
| | | | - | 1 | - | - | -------- | -------- | BR,E,ED,EK,F,G,KO,MX,U |
| | 64250-MEL-D10ZA | ---------- | - | 1 | - | - | -------- | -------- | 2ED,2F,2G,2KO,2U,3E,4EK |
| 7 | 64501-MEL-010 | STAY A, UPPER COWL ---------- | 1 | 1 | - | - | | | |
| 8 | 88110-MEL-003 | MIRROR ASSY., R. BACK ------- | 1 | - | - | - | -------- | -------- | F,G |
| | | | 1 | - | - | - | -------- | 4M000291 | BR,KO,MX |
| | | | 1 | - | - | - | -------- | 4M000847 | U |
| | | | 1 | - | - | - | -------- | 4M010948 | E,ED |
| | 88110-MEL-013 | ---------- | 1 | - | - | - | 4M000292 | -------- | BR,KO,MX |
| | | | 1 | - | - | - | 4M000848 | -------- | U |
| | | | 1 | - | - | - | 4M010949 | -------- | E,ED |
| | | | - | 1 | - | - | | | |
| 9 | 88120-MEL-003 | MIRROR ASSY., L. BACK ------- | 1 | - | - | - | -------- | -------- | F,G |
| | | | 1 | - | - | - | -------- | 4M000291 | BR,KO,MX |
| | | | 1 | - | - | - | -------- | 4M000847 | U |
| | | | 1 | - | - | - | -------- | 4M010948 | E,ED |

# UPPER COWL (CBR1000RR4/5)



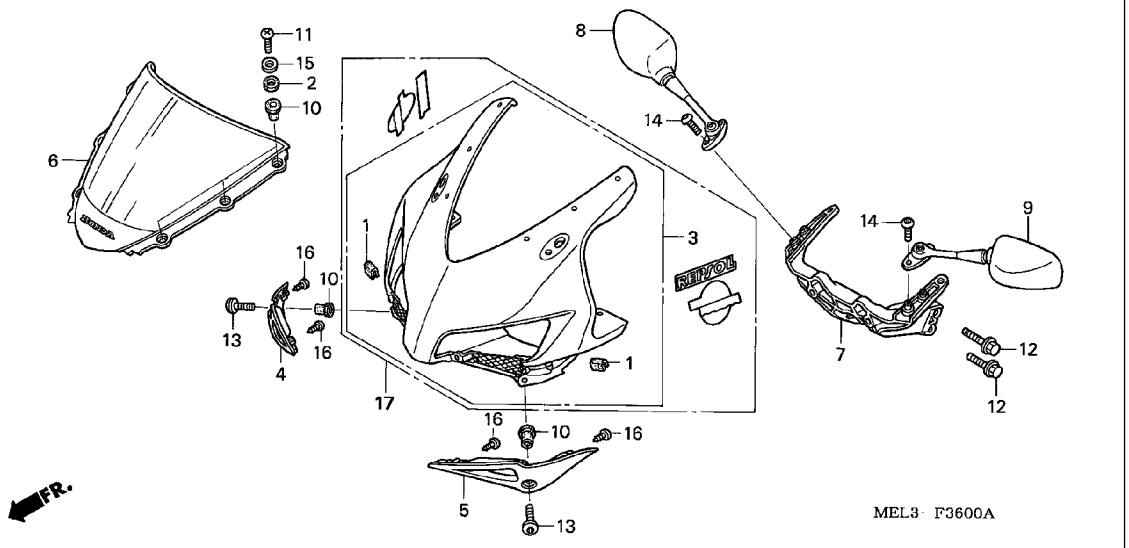


| Ref. No. | Part No. | Description | Reqd. QTY CBR1000RR 4 | 5 | 6 | 7 | Serial No. | Parts catalogue code |
|---|---|---|---|---|---|---|---|---|
| (9) | 88120-MEL-013 | MIRROR ASSY., L. BACK ····· | 1 | - | - | - | 4M000292 -------- | BR,KO,MX |
| | | | 1 | - | - | - | 4M000848 -------- | U |
| | | | 1 | - | - | - | 4M010949 -------- | E,ED |
| | | | - | 1 | - | - | | |
| 10 | 90111-KW3-003 | NUT, COWL SETTING, 5MM ····· | 8 | 8 | - | - | | |
| 11 | 90111-MEL-000 | SCREW, TRUSS, 5X18 ····· | 6 | 6 | - | - | | |
| 12 | 90120-MEE-000 | BOLT, FLANGE, 8X28 ····· | 2 | 2 | - | - | | |
| 13 | 90120-MEL-000 | SCREW, PAN, 5X20 ····· | 2 | 2 | - | - | | |
| 14 | 90130-MEE-000 | BOLT, SOCKET, 6X13 ····· | 4 | 4 | - | - | | |
| 15 | 90504-964-000 | WASHER, THRUST, 5MM ····· | 6 | 6 | - | - | | |
| 16 | 93903-24280 | SCREW, TAPPING, 4X10 ····· | 4 | 4 | - | - | | |
| 17 | 64100-MEL-D10ZA | COWL SET, UPPER *TYPE1*(WL) · | - | 1 | - | - | -------- -------- | 2ED,2F,2G,2KO,2U,3E,4EK |

# UPPER COWL (CBR1000RR6/7)



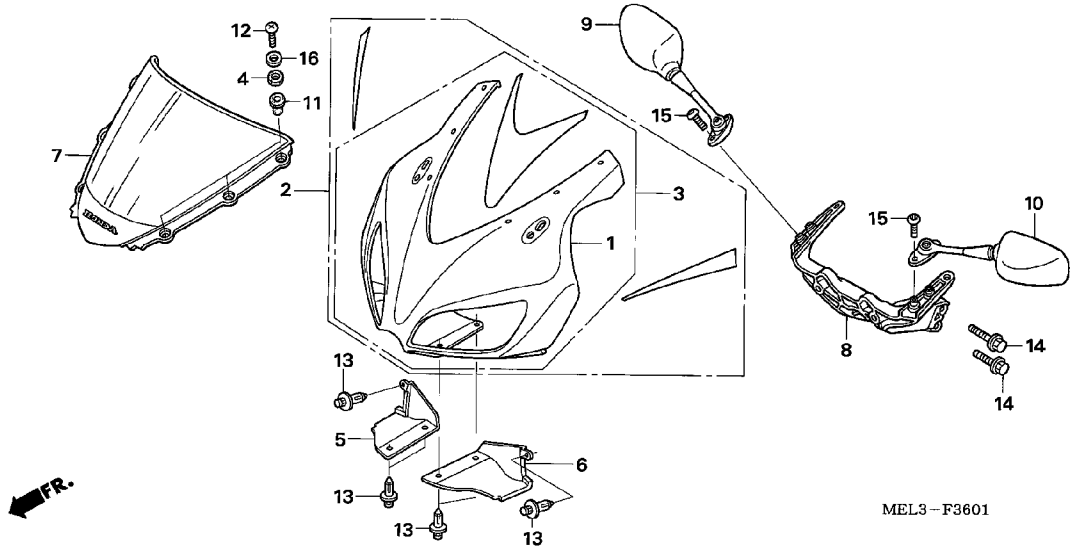


| Ref. No. | L.O.N. | (Relative ref. Number) Description | F.R.T. |
|---|---|---|---|
| 2 | | (1,3) | |
| | 4111B4 | COWL, UPPER | 0.9 |
| 5 | 4111T2 | SPOILER, FRONT :RIGHT | 0.1 |
| | 4111T3 | SPOILER, FRONT :BOTH | 0.1 |
| 6 | 4111T1 | SPOILER, FRONT :LEFT | 0.1 |
| | 4111T3 | SPOILER, FRONT :BOTH | 0.1 |
| 7 | 411115 | WINDSCREEN SET | 0.2 |
| 8 | 4111G6 | STAY A, UPPER COWL | 0.8 |
| 9 | 4131L0 | MIRROR, BACK :RIGHT | 0.1 |
| | 4131S3 | MIRROR, BACK :BOTH | 0.1 |
| 10 | 4131K9 | MIRROR, BACK :LEFT | 0.1 |
| | 4131S3 | MIRROR, BACK :BOTH | 0.1 |

| Ref. No. | Part No. | Description | Reqd. QTY CBR1000RR 4 | 5 | 6 | 7 | Serial No. | | Parts catalogue code |
|---|---|---|---|---|---|---|---|---|---|
| 1 | 64100-MEL-A20ZA | COWL SET, UPPER *TYPE1* | - | - | 1 | - | -------- | -------- | MX,U |
| | 64100-MEL-D20ZC | | - | - | 1 | - | -------- | -------- | E,ED,EK,F,KO |
| | 64100-MEL-A30ZD | COWL SET, UPPER *TYPE4* | - | - | - | 1 | -------- | -------- | MX,U |
| 2 | 64100-MEL-A20ZB | COWL SET, UPPER *TYPE3*(WL) | - | - | 1 | - | -------- | -------- | MX,U |
| | 64100-MEL-A20ZC | COWL SET, UPPER *TYPE4*(WL) | - | - | 1 | - | -------- | -------- | MX,U |
| | 64100-MEL-A20ZF | COWL SET, UPPER *TYPE5 1* (WL) | - | - | 1 | - | -------- | -------- | MX,U |
| | 64100-MEL-A30ZA | COWL SET, UPPER *TYPE1*(WL) | - | - | - | 1 | -------- | -------- | BR,MX,U |
| | 64100-MEL-A30ZB | COWL SET, UPPER *TYPE2*(WL) | - | - | - | 1 | -------- | -------- | BR,MX,U |
| 3 | 64100-MEL-D20ZD | COWL SET, UPPER *TYPE2*(WL) | - | - | 1 | - | -------- | -------- | BR,E,ED,EK,F,KO |
| | 64100-MEL-D20ZE | COWL SET, UPPER *TYPE3*(WL) | - | - | 1 | - | -------- | -------- | BR,E,ED,EK,F |
| | 64100-MEL-D30ZA | COWL SET, UPPER *TYPE1*(WL) | - | - | - | 1 | -------- | -------- | E,ED,EK,F,KO |
| | 64100-MEL-D30ZB | COWL SET, UPPER *TYPE2*(WL) | - | - | - | 1 | -------- | -------- | E,ED,EK,F,KO |
| | 64100-MEL-D40ZA | COWL SET, UPPER *TYPE1*(WL) | - | - | - | 1 | -------- | -------- | 2ED,2F,3E,4EK |
| 4 | 64205-166-610 | WASHER, SCREEN SETTING | - | - | 6 | 6 | | | |
| 5 | 64230-MEL-D20 | SPOILER, R. FR. | - | - | 1 | 1 | | | |
| 6 | 64240-MEL-D20 | SPOILER, L. FR. | - | - | 1 | 1 | | | |
| 7 | 64250-MEL-000ZA | WINDSCREEN SET *TYPE1*(WL) | - | - | 1 | - | | | |
| | | | - | - | - | 1 | -------- | -------- | BR,E,ED,EK,F,KO,MX,U |
| | 64250-MEL-D40ZA | | - | - | - | 1 | -------- | -------- | 2ED,2F,3E,4EK |
| 8 | 64501-MEL-010 | STAY A, UPPER COWL | - | - | 1 | 1 | | | |
| 9 | 88110-MEL-013 | MIRROR ASSY., R. BACK | - | - | 1 | 1 | | | |
| 10 | 88120-MEL-013 | MIRROR ASSY., L. BACK | - | - | 1 | 1 | | | |
| 11 | 90111-KW3-003 | NUT, COWL SETTING, 5MM | - | - | 6 | 6 | | | |
| 12 | 90111-MEL-000 | SCREW, TRUSS, 5X18 | - | - | 6 | 6 | | | |
| 13 | 90116-MCS-G00 | RIVET, PUSH | - | - | 6 | 6 | | | |
| 14 | 90120-MEE-000 | BOLT, FLANGE, 8X28 | - | - | 2 | 2 | | | |

# UPPER COWL (CBR1000RR6/7)



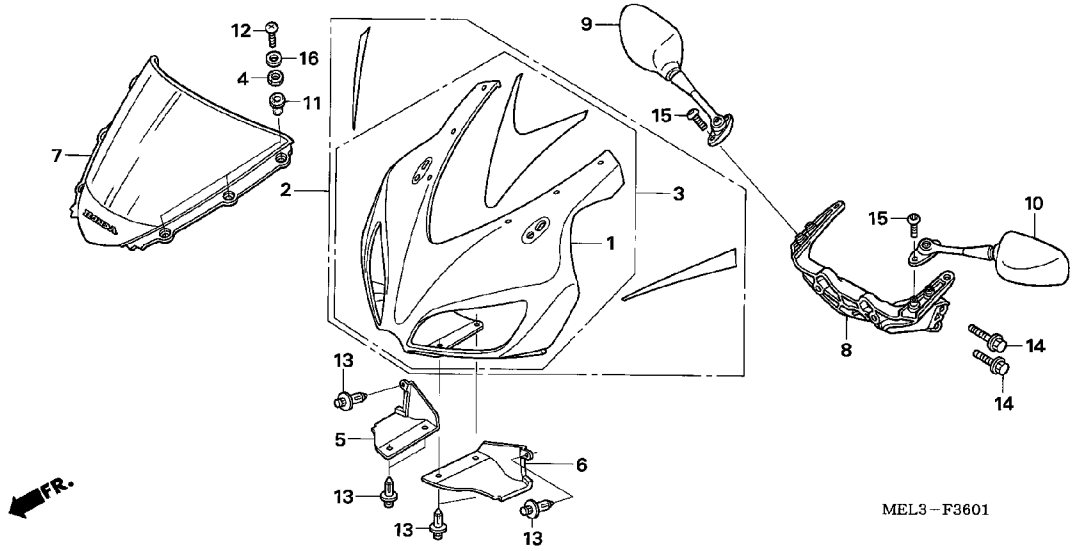


| Ref. No. | Part No. | Description | Reqd. QTY CBR1000RR 4 | 5 | 6 | 7 | Serial No. | Parts catalogue code |
|---|---|---|---|---|---|---|---|---|
| 15 | 90130-MEE-000 | BOLT, SOCKET, 6X13 ..... | - | - | 4 | 4 | | |
| 16 | 90504-964-000 | WASHER, THRUST, 5MM ..... | - | - | 6 | 6 | | |

# MIDDLE COWL (CBR1000RR4/5)



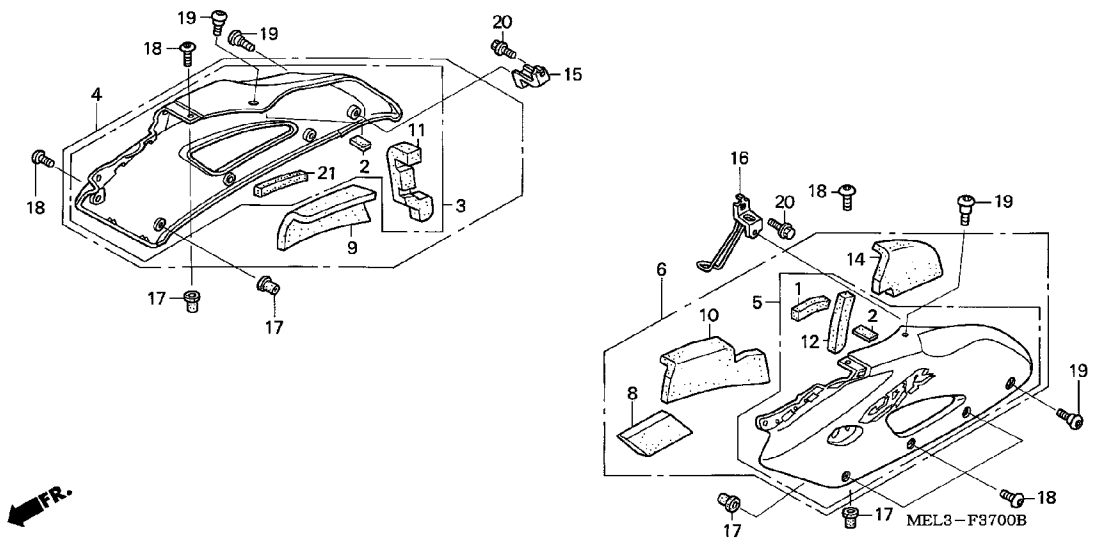


| Ref. No. | L.O.N. | (Relative ref. Number) Description | F.R.T. |
|---|---|---|---|
| 4 | | (3) | |
| | 4111D4 | COWL, MIDDLE :RIGHT ---------- | 0.2 |
| | 4111D5 | COWL, MIDDLE :BOTH ---------- | 0.4 |
| 6 | | (5) | |
| | 4111D3 | COWL, MIDDLE :LEFT ---------- | 0.2 |
| | 4111D5 | COWL, MIDDLE :BOTH ---------- | 0.4 |

| Ref. No. | Part No. | Description | | Reqd. QTY CBR1000RR 4 | 5 | 6 | 7 | Serial No. | Parts catalogue code |
|---|---|---|---|---|---|---|---|---|---|
| 1 | 50133-MEL-300 | MAT, L. ENGINE HANGER ------- | | 1 | 1 | - | - | | |
| 2 | 64121-MBG-000 | RUBBER, PROTECTOR ---------- | | 2 | - | - | - | -------- 4M000003 | BR,MX,U |
| | | | | 2 | - | - | - | -------- 4M000007 | F |
| | | | | 2 | - | - | - | -------- 4M001936 | G |
| | | | | 2 | - | - | - | -------- 4M006221 | E,ED |
| | 64311-MEL-300 | ---------- | | 2 | - | - | - | -------- -------- | KO |
| | | | | 2 | - | - | - | 4M000004 -------- | BR,MX,U |
| | | | | 2 | - | - | - | 4M000008 -------- | F |
| | | | | 2 | - | - | - | 4M001937 -------- | G |
| | | | | 2 | - | - | - | 4M006222 -------- | E,ED |
| | | | | - | 2 | - | - | | |
| 3 | 64300-MEL-000ZG | COWL SET, R. MIDDLE | | | | | | | |
| | | *TYPE1 | 1*(WL) | 1 | - | - | - | -------- 4M000210 | F |
| | | | | 1 | - | - | - | -------- 4M000377 | U |
| | | | | 1 | - | - | - | -------- 4M002851 | G |
| | 64300-MEL-000ZH | COWL SET, R. MIDDLE | | | | | | | |
| | | *TYPE2 | 1*(WL) | 1 | - | - | - | -------- 4M000210 | F |
| | | | | 1 | - | - | - | -------- 4M000377 | U |
| | | | | 1 | - | - | - | -------- 4M002851 | G |
| | 64300-MEL-000ZJ | COWL SET, R. MIDDLE | | | | | | | |
| | | *TYPE3 | 1*(WL) | 1 | - | - | - | -------- 4M000210 | F |
| | | | | 1 | - | - | - | -------- 4M000377 | U |
| | | | | 1 | - | - | - | -------- 4M002851 | G |
| | 64300-MEL-010ZG | COWL SET, R. MIDDLE | | | | | | | |
| | | *TYPE1 | 1*(WL) | 1 | - | - | - | -------- 4M006438 | E,ED |
| | 64300-MEL-010ZH | COWL SET, R. MIDDLE | | | | | | | |
| | | *TYPE2 | 1*(WL) | 1 | - | - | - | -------- 4M006438 | E,ED |
| | 64300-MEL-010ZJ | COWL SET, R. MIDDLE | | | | | | | |
| | | *TYPE3 | 1*(WL) | 1 | - | - | - | -------- 4M006438 | E,ED |

# MIDDLE COWL (CBR1000RR4/5)



| Ref. No. | Part No. | Description | Reqd. QTY CBR1000RR 4 | 5 | 6 | 7 | Serial No. | | Parts catalogue code |
|---|---|---|---|---|---|---|---|---|---|
| (3) | 64300-MEL-020ZG | COWL SET, R. MIDDLE *TYPE1* 1*(WL) | 1 | - | - | - | -------- | -------- | KO |
| | | | 1 | - | - | - | 4M000211 | -------- | F |
| | | | 1 | - | - | - | 4M000378 | -------- | U |
| | | | 1 | - | - | - | 4M002852 | -------- | G |
| | | | 1 | - | - | - | 4M006439 | 4M011418 | E,ED |
| | 64300-MEL-020ZH | COWL SET, R. MIDDLE *TYPE2* 1*(WL) | 1 | - | - | - | -------- | -------- | KO |
| | | | 1 | - | - | - | 4M000211 | -------- | F |
| | | | 1 | - | - | - | 4M000378 | -------- | U |
| | | | 1 | - | - | - | 4M002852 | -------- | G |
| | | | 1 | - | - | - | 4M006439 | 4M011418 | E,ED |
| | 64300-MEL-020ZJ | COWL SET, R. MIDDLE *TYPE3* 1*(WL) | 1 | - | - | - | -------- | -------- | KO |
| | | | 1 | - | - | - | 4M000211 | -------- | F |
| | | | 1 | - | - | - | 4M000378 | -------- | U |
| | | | 1 | - | - | - | 4M002852 | -------- | G |
| | | | 1 | - | - | - | 4M006439 | 4M011418 | E,ED |
| | 64300-MEL-030ZG | COWL SET, R. MIDDLE *TYPE1* 1*(WL) | 1 | - | - | - | 4M011419 | -------- | E,ED |
| | 64300-MEL-030ZH | COWL SET, R. MIDDLE *TYPE2* 1*(WL) | 1 | - | - | - | 4M011419 | -------- | E,ED |
| | 64300-MEL-030ZJ | COWL SET, R. MIDDLE *TYPE3* 1*(WL) | 1 | - | - | - | 4M011419 | -------- | E,ED |
| | 64300-MEL-D00ZA | COWL SET, R. MIDDLE *TYPE1* (WL) | - | 1 | - | - | -------- | -------- | E,ED,EK,F,G,KO |
| | 64300-MEL-D00ZB | COWL SET, R. MIDDLE *TYPE2* (WL) | - | 1 | - | - | -------- | -------- | E,ED,EK,F,G,KO |
| | 64300-MEL-D00ZD | COWL SET, R. MIDDLE *TYPE3* 1*(WL) | - | 1 | - | - | -------- | -------- | E,ED,EK,F,G |
| | 64300-MEL-U00ZA | COWL SET, R. MIDDLE *TYPE1* (WL) | - | 1 | - | - | -------- | 5M100189 | U |
| | 64300-MEL-U00ZD | COWL SET, R. MIDDLE *TYPE2* 1*(WL) | - | 1 | - | - | -------- | 5M100189 | U |
| | 64300-MEL-U00ZE | COWL SET, R. MIDDLE *TYPE3* 1*(WL) | - | 1 | - | - | -------- | 5M100189 | U |
| | 64300-MEL-D10ZB | COWL SET, R. MIDDLE *TYPE1* 1*(WL) | - | 1 | - | - | -------- | 5M100255 | 2F |
| | | | - | 1 | - | - | -------- | 5M100601 | 2G |
| | | | - | 1 | - | - | -------- | 5M102657 | 2ED,3E,4EK |
| | 64300-MEL-U01ZA | COWL SET, R. MIDDLE *TYPE1* (WL) | - | 1 | - | - | 5M100190 | -------- | U |
| | 64300-MEL-U01ZD | COWL SET, R. MIDDLE *TYPE2* 1*(WL) | - | 1 | - | - | 5M100190 | -------- | U |
| | 64300-MEL-U01ZE | COWL SET, R. MIDDLE *TYPE3* 1*(WL) | - | 1 | - | - | 5M100190 | -------- | U |
| | 64300-MEL-U10ZA | COWL SET, R. MIDDLE *TYPE1* (WL) | - | 1 | - | - | -------- | 5M100235 | 2U |
| | 64300-MEL-D11ZB | COWL SET, R. MIDDLE *TYPE1* 1*(WL) | - | 1 | - | - | -------- | -------- | 2KO |
| | | | - | 1 | - | - | 5M100236 | -------- | 2U |
| | | | - | 1 | - | - | 5M100256 | -------- | 2F |
| | | | - | 1 | - | - | 5M100602 | -------- | 2G |
| | | | - | 1 | - | - | 5M102658 | -------- | 2ED,3E,4EK |
| 4 | 64300-MEL-671ZA | COWL SET, R. MIDDLE *TYPE1* (WL) | 1 | - | - | - | -------- | 4M000349 | MX |
| | 64300-MEL-671ZD | COWL SET, R. MIDDLE *TYPE2* (WL) | 1 | - | - | - | -------- | 4M000349 | BR,MX |

# MIDDLE COWL (CBR1000RR4/5)



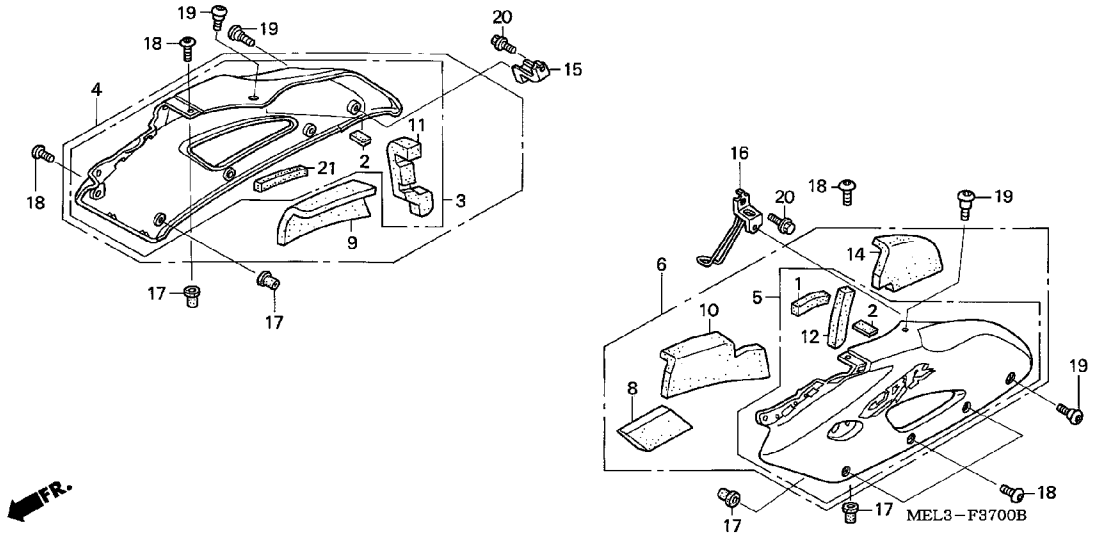


| Ref. No. | Part No. | Description | Reqd. QTY CBR1000RR 4 | 5 | 6 | 7 | Serial No. | Parts catalogue code |
|---|---|---|---|---|---|---|---|---|
| (4) | 64300-MEL-671ZE | COWL SET, R. MIDDLE *TYPE3* (WL) | 1 | - | - | - | -------- 4M000349 | BR,MX |
| | 64300-MEL-672ZA | COWL SET, R. MIDDLE *TYPE1* (WL) | 1 | - | - | - | 4M000350 -------- | MX |
| | 64300-MEL-672ZD | COWL SET, R. MIDDLE *TYPE2* (WL) | 1 | - | - | - | 4M000350 -------- | BR,MX |
| | 64300-MEL-672ZE | COWL SET, R. MIDDLE *TYPE3* (WL) | 1 | - | - | - | 4M000350 -------- | BR,MX |
| | 64300-MEL-A01ZA | COWL SET, R. MIDDLE *TYPE1* (WL) | - | 1 | - | - | -------- -------- | BR,MX |
| | 64300-MEL-A01ZD | COWL SET, R. MIDDLE *TYPE2* 1*(WL) | - | 1 | - | - | -------- -------- | BR,MX |
| | 64300-MEL-A01ZE | COWL SET, R. MIDDLE *TYPE3* 1*(WL) | - | 1 | - | - | -------- -------- | BR,MX |
| 5 | 64350-MEL-000ZG | COWL SET, L. MIDDLE *TYPE1* 1*(WL) | 1 | - | - | - | -------- -------- | F,G,KO,U |
| | 64350-MEL-000ZH | COWL SET, L. MIDDLE *TYPE2* 1*(WL) | 1 | - | - | - | -------- -------- | F,G,KO,U |
| | 64350-MEL-000ZJ | COWL SET, L. MIDDLE *TYPE3* 1*(WL) | 1 | - | - | - | -------- -------- | F,G,KO,U |
| | 64350-MEL-010ZG | COWL SET, L. MIDDLE *TYPE1* 1*(WL) | 1 | - | - | - | -------- 4M011418 | E,ED |
| | 64350-MEL-010ZH | COWL SET, L. MIDDLE *TYPE2* 1*(WL) | 1 | - | - | - | -------- 4M011418 | E,ED |
| | 64350-MEL-010ZJ | COWL SET, L. MIDDLE *TYPE3* 1*(WL) | 1 | - | - | - | -------- 4M011418 | E,ED |
| | 64350-MEL-020ZG | COWL SET, L. MIDDLE *TYPE1* 1*(WL) | 1 | - | - | - | 4M011419 -------- | E,ED |

# F-37 MIDDLE COWL (CBR1000RR4/5)

N16

| Ref. No. | Part No. | Description | Reqd. QTY CBR1000RR 4 | 5 | 6 | 7 | Serial No. | Parts catalogue code |
|---|---|---|---|---|---|---|---|---|
| (5) | 64350-MEL-020ZH | COWL SET, L. MIDDLE *TYPE2 1*(WL) | 1 | - | - | - | 4M011419 -------- | E,ED |
| | 64350-MEL-020ZJ | COWL SET, L. MIDDLE *TYPE3 1*(WL) | 1 | - | - | - | 4M011419 -------- | E,ED |
| | 64350-MEL-D00ZA | COWL SET, L. MIDDLE *TYPE1* (WL) | - | 1 | - | - | -------- -------- | E,ED,EK,F,G,KO |
| | 64350-MEL-D00ZB | COWL SET, L. MIDDLE *TYPE2* (WL) | - | 1 | - | - | -------- -------- | E,ED,EK,F,G,KO |
| | 64350-MEL-D00ZD | COWL SET, L. MIDDLE *TYPE3 1*(WL) | - | 1 | - | - | -------- -------- | E,ED,EK,F,G |
| | 64350-MEL-U00ZA | COWL SET, L. MIDDLE *TYPE1* (WL) | - | 1 | - | - | -------- -------- | U |
| | 64350-MEL-U00ZD | COWL SET, L. MIDDLE *TYPE2 1*(WL) | - | 1 | - | - | -------- -------- | U |
| | 64350-MEL-U00ZE | COWL SET, L. MIDDLE *TYPE3 1*(WL) | - | 1 | - | - | -------- -------- | U |
| | 64350-MEL-D10ZB | COWL SET, L. MIDDLE *TYPE1 1*(WL) | - | 1 | - | - | -------- -------- | 2ED,2F,2G,2KO,2U,3E,4EK |
| 6 | 64350-MEL-670ZA | COWL SET, L. MIDDLE *TYPE1* (WL) | 1 | - | - | - | -------- -------- | MX |
| | 64350-MEL-670ZD | COWL SET, L. MIDDLE *TYPE2* (WL) | 1 | - | - | - | -------- -------- | BR,MX |
| | 64350-MEL-670ZE | COWL SET, L. MIDDLE *TYPE3* (WL) | 1 | - | - | - | -------- -------- | BR,MX |
| | 64350-MEL-A00ZA | COWL SET, L. MIDDLE *TYPE1* (WL) | - | 1 | - | - | -------- -------- | BR,MX |
| | 64350-MEL-A00ZD | COWL SET, L. MIDDLE *TYPE2 1*(WL) | - | 1 | - | - | -------- -------- | BR,MX |
| | 64350-MEL-A00ZE | COWL SET, L. MIDDLE *TYPE3 1*(WL) | - | 1 | - | - | -------- -------- | BR,MX |
| 8 | 64391-MEL-670 | MAT A, L. MIDDLE COWL ····· | 1 | - | - | - | -------- -------- | BR,MX |
| | 64391-MEL-A00 | ····· | - | 1 | - | - | -------- -------- | BR,MX |
| 9 | 64392-MEL-670 | MAT B, R. MIDDLE COWL ····· | 1 | - | - | - | -------- -------- | BR,MX |
| | 64392-MEL-A00 | ····· | - | 1 | - | - | -------- -------- | BR,MX |
| 10 | 64393-MEL-670 | MAT B, L. MIDDLE COWL ····· | 1 | - | - | - | -------- -------- | BR,MX |
| | 64393-MEL-A00 | ····· | - | 1 | - | - | -------- -------- | BR,MX |
| 11 | 64401-MEL-300 | MAT C, R. MIDDLE COWL ····· | 1 | 1 | - | - | | |
| 12 | 64402-MEL-300 | MAT D, L. MIDDLE COWL ····· | 1 | 1 | - | - | | |
| 14 | 64406-MEL-670 | MAT E, L. MIDDLE COWL ····· | 1 | - | - | - | -------- -------- | BR,MX |
| | 64406-MEL-A00 | ····· | - | 1 | - | - | -------- -------- | BR,MX |
| 15 | 64543-MEL-000 | STAY, R. MIDDLE COWL ····· | 1 | 1 | - | - | | |
| 16 | 64544-MEL-000 | STAY, L. MIDDLE COWL ····· | 1 | - | - | - | -------- -------- | BR,F,G,MX,U |
| | 64544-MEL-010 | ····· | 1 | - | - | - | -------- -------- | E,ED,KO |
| | | | - | 1 | - | - | | |
| 17 | 90111-KW3-003 | NUT, COWL SETTING, 5MM ····· | 8 | 8 | - | - | | |
| 18 | 90113-MCJ-000 | SCREW, PAN, 5X15 ····· | 8 | 8 | - | - | | |
| 19 | 90114-MCJ-000 | SCREW, SPECIAL, 6X14 ····· | 4 | 4 | - | - | | |
| 20 | 96001-06012-07 | BOLT, FLANGE, 6X12 ····· | 2 | 2 | - | - | | |

3

# MIDDLE COWL (CBR1000RR4/5)



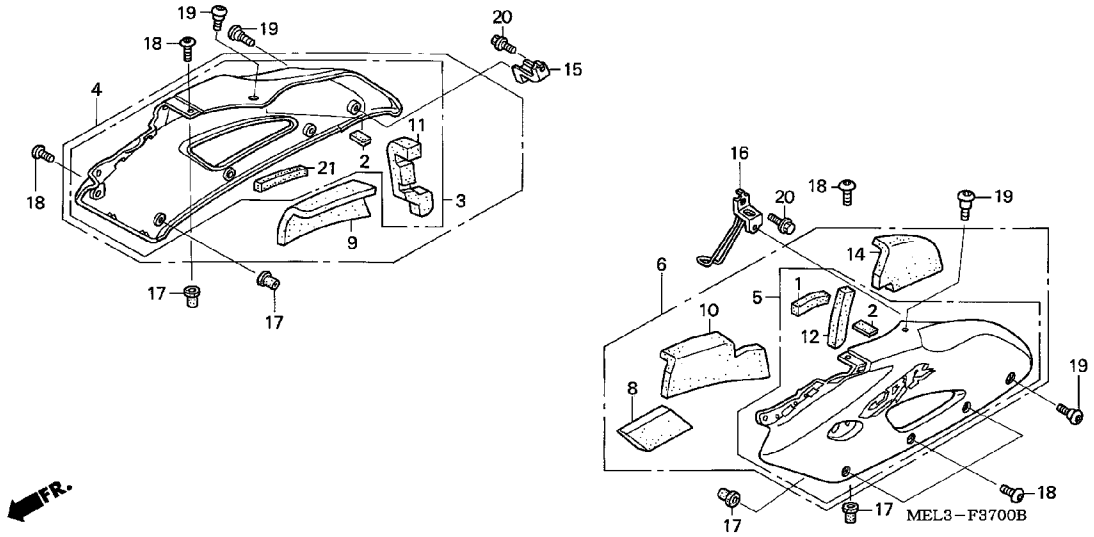


| Ref. No. | Part No. | Description | Reqd. QTY CBR1000RR 4 | 5 | 6 | 7 | Serial No. | | Parts catalogue code |
|---|---|---|---|---|---|---|---|---|---|
| 21 | 64409-MEL-300 | MAT G, R. MIDDLE COWL ····· | 1 | 1 | - | - | -------- | -------- | EK,KO |
| | | | 1 | - | - | - | 4M000211 | -------- | F |
| | | | 1 | - | - | - | 4M000378 | -------- | U |
| | | | 1 | - | - | - | 4M002852 | -------- | G |
| | | | 1 | - | - | - | 4M006439 | -------- | E,ED |
| | | | - | 1 | - | - | -------- | -------- | E,ED,F,G,U |
| | | | - | 1 | - | - | -------- | 5M100235 | 2U |
| | | | - | 1 | - | - | -------- | 5M100255 | 2F |
| | | | - | 1 | - | - | -------- | 5M100601 | 2G |
| | | | - | 1 | - | - | -------- | 5M102657 | 2ED,3E,4EK |
| | | | - | 2 | - | - | -------- | -------- | 2KO |
| | | | - | 2 | - | - | 5M100236 | -------- | 2U |
| | | | - | 2 | - | - | 5M100256 | -------- | 2F |
| | | | - | 2 | - | - | 5M100602 | -------- | 2G |
| | | | - | 2 | - | - | 5M102658 | -------- | 2ED,3E,4EK |

# F-37-1 MIDDLE COWL (CBR1000RR6/7)

2-B 2

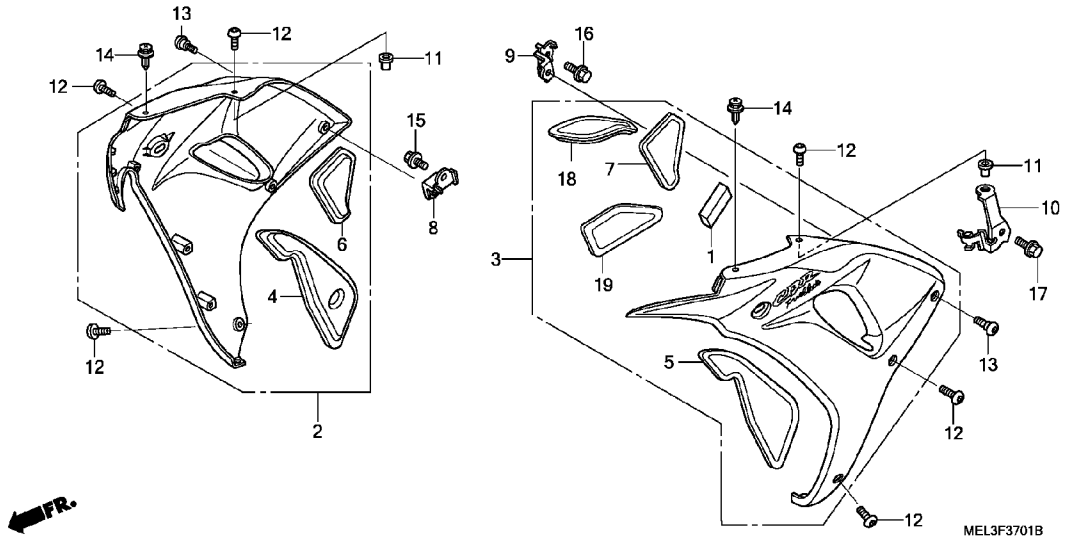


| Ref. No. | L.O.N. | (Relative ref. Number) Description | F.R.T. |
|---|---|---|---|
| 2 | 4111D4 | COWL, MIDDLE :RIGHT ---------- | 0.3 |
| | 4111D5 | COWL, MIDDLE :BOTH ---------- | 0.6 |
| 3 | 4111D3 | COWL, MIDDLE :LEFT ---------- | 0.3 |
| | 4111D5 | COWL, MIDDLE :BOTH ---------- | 0.6 |

| Ref. No. | Part No. | Description | Reqd. QTY CBR1000RR 4 | 5 | 6 | 7 | Serial No. | | Parts catalogue code |
|---|---|---|---|---|---|---|---|---|---|
| 1 | 50133-MEL-300 | MAT, L. ENGINE HANGER ------- | - | - | 1 | 1 | | | |
| 2 | 64300-MEL-A20ZA | COWL SET, R. MIDDLE *TYPE1* (WL) | - | - | 1 | - | -------- | -------- | MX,U |
| | 64300-MEL-A20ZB | COWL SET, R. MIDDLE *TYPE2* (WL) | - | - | 1 | - | -------- | -------- | MX,U |
| | 64300-MEL-A20ZC | COWL SET, R. MIDDLE *TYPE3* (WL) | - | - | 1 | - | -------- | -------- | MX,U |
| | 64300-MEL-A20ZD | COWL SET, R. MIDDLE *TYPE4* (WL) | - | - | 1 | - | -------- | -------- | MX,U |
| | 64300-MEL-D20ZA | COWL SET, R. MIDDLE *TYPE1* (WL) | - | - | 1 | - | -------- | -------- | E,ED,EK,F,KO |
| | 64300-MEL-D20ZB | COWL SET, R. MIDDLE *TYPE2* (WL) | - | - | 1 | - | -------- | -------- | BR,E,ED,EK,F,KO |
| | 64300-MEL-D20ZC | COWL SET, R. MIDDLE *TYPE3* (WL) | - | - | 1 | - | -------- | -------- | BR,E,ED,EK,F |
| | 64300-MEL-A30ZA | COWL SET, R. MIDDLE *TYPE1* (WL) | - | - | - | 1 | -------- | -------- | MX,U |
| | 64300-MEL-A30ZB | COWL SET, R. MIDDLE *TYPE2* (WL) | - | - | - | 1 | -------- | -------- | MX,U |
| | 64300-MEL-A30ZD | COWL SET, R. MIDDLE *TYPE4* (WL) | - | - | - | 1 | -------- | -------- | MX,U |
| | 64300-MEL-B30ZA | COWL SET, R. MIDDLE *TYPE1* (WL) | - | - | - | 1 | -------- | -------- | BR |
| | 64300-MEL-B30ZB | COWL SET, R. MIDDLE *TYPE2* (WL) | - | - | - | 1 | -------- | -------- | BR |
| | 64300-MEL-D30ZA | COWL SET, R. MIDDLE *TYPE1* (WL) | - | - | - | 1 | -------- | -------- | E,ED,EK,F,KO |
| | 64300-MEL-D30ZB | COWL SET, R. MIDDLE *TYPE2* (WL) | - | - | - | 1 | -------- | -------- | E,ED,EK,F,KO |

3

# MIDDLE COWL (CBR1000RR6/7)



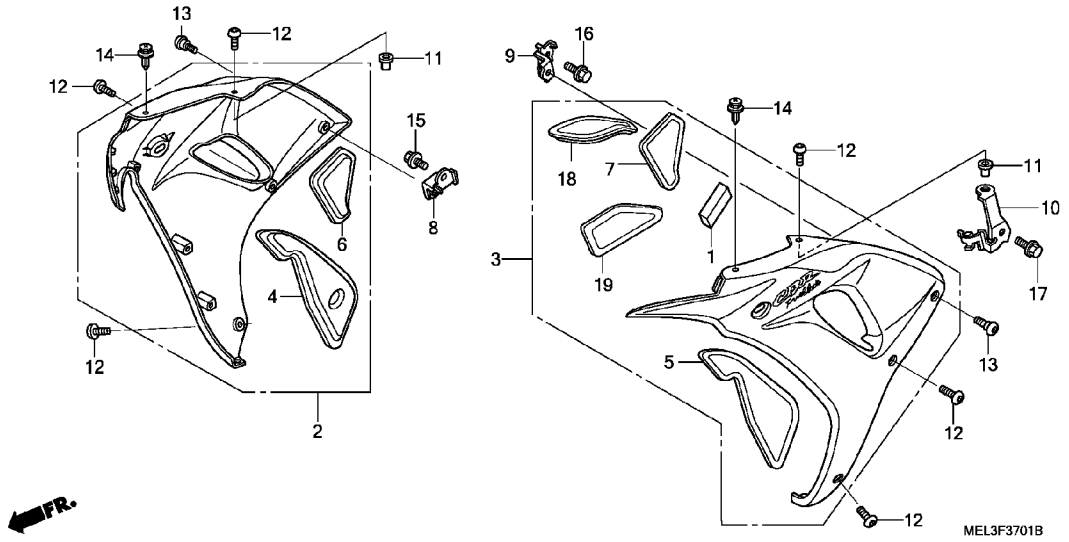


| Ref. No. | Part No. | Description | Reqd. QTY CBR1000RR 4 | 5 | 6 | 7 | Serial No. | | Parts catalogue code |
|---|---|---|---|---|---|---|---|---|---|
| (2) | 64300-MEL-D40ZA | COWL SET, R. MIDDLE *TYPE1* (WL) | - | - | - | 1 | -------- | -------- | 2ED,2F,3E,4EK |
| 3 | 64350-MEL-D20ZA | COWL SET, L. MIDDLE *TYPE1* (WL) | - | - | 1 | - | -------- | -------- | E,ED,EK,F,KO |
| | 64350-MEL-D20ZB | COWL SET, L. MIDDLE *TYPE2* (WL) | - | - | 1 | - | -------- | -------- | BR,E,ED,EK,F,KO |
| | 64350-MEL-D20ZC | COWL SET, L. MIDDLE *TYPE3* (WL) | - | - | 1 | - | -------- | -------- | BR,E,ED,EK,F |
| | 64350-MEL-U20ZA | COWL SET, L. MIDDLE *TYPE1* (WL) | - | - | 1 | - | -------- | -------- | U |
| | 64350-MEL-U20ZB | COWL SET, L. MIDDLE *TYPE2* (WL) | - | - | 1 | - | -------- | -------- | U |
| | 64350-MEL-U20ZC | COWL SET, L. MIDDLE *TYPE3* (WL) | - | - | 1 | - | -------- | -------- | U |
| | 64350-MEL-U20ZD | COWL SET, L. MIDDLE *TYPE4* (WL) | - | - | 1 | - | -------- | -------- | U |
| | 64350-MEL-A20ZA | COWL SET, L. MIDDLE *TYPE1* (WL) | - | - | 1 | - | -------- | -------- | MX |
| | 64350-MEL-A20ZB | COWL SET, L. MIDDLE *TYPE2* (WL) | - | - | 1 | - | -------- | -------- | MX |
| | 64350-MEL-A20ZC | COWL SET, L. MIDDLE *TYPE3* (WL) | - | - | 1 | - | -------- | -------- | MX |
| | 64350-MEL-A20ZD | COWL SET, L. MIDDLE *TYPE4* (WL) | - | - | 1 | - | -------- | -------- | MX |
| | 64350-MEL-A30ZA | COWL SET, L. MIDDLE *TYPE1* (WL) | - | - | - | 1 | -------- | -------- | MX,U |
| | 64350-MEL-A30ZB | COWL SET, L. MIDDLE *TYPE2* (WL) | - | - | - | 1 | -------- | -------- | MX,U |

# MIDDLE COWL (CBR1000RR6/7)



| Ref. No. | Part No. | Description | Reqd. QTY CBR1000RR 4 | 5 | 6 | 7 | Serial No. | Parts catalogue code |
|---|---|---|---|---|---|---|---|---|
| (3) | 64350-MEL-A30ZD | COWL SET, L. MIDDLE *TYPE4* (WL) | - | - | - | 1 | -------- -------- | MX,U |
| | 64350-MEL-B30ZA | COWL SET, L. MIDDLE *TYPE1* (WL) | - | - | - | 1 | -------- -------- | BR |
| | 64350-MEL-B30ZB | COWL SET, L. MIDDLE *TYPE2* (WL) | - | - | - | 1 | -------- -------- | BR |
| | 64350-MEL-D30ZA | COWL SET, L. MIDDLE *TYPE1* (WL) | - | - | - | 1 | -------- -------- | E,ED,EK,F,KO |
| | 64350-MEL-D30ZB | COWL SET, L. MIDDLE *TYPE2* (WL) | - | - | - | 1 | -------- -------- | E,ED,EK,F,KO |
| | 64350-MEL-D40ZA | COWL SET, L. MIDDLE *TYPE1* (WL) | - | - | - | 1 | -------- -------- | 2ED,2F,3E,4EK |
| 4 | 64390-MEL-D20 | MAT A, R. MIDDLE COWL ..... | - | - | 1 | 1 | | |
| 5 | 64391-MEL-D20 | MAT A, L. MIDDLE COWL ..... | - | - | 1 | 1 | | |
| 6 | 64392-MEL-D20 | MAT B, R. MIDDLE COWL ..... | - | - | 1 | 1 | | |
| 7 | 64393-MEL-D20 | MAT B, L. MIDDLE COWL ..... | - | - | 1 | 1 | | |
| 8 | 64543-MEL-D20 | STAY, R. MIDDLE COWL ..... | - | - | 1 | 1 | | |
| 9 | 64544-MEL-D20 | STAY, L. MIDDLE COWL ..... | - | - | 1 | 1 | | |
| 10 | 64547-MEL-D20 | STAY, MIDDLE COWL UPPER ..... | - | - | 1 | 1 | | |
| 11 | 90111-KW3-003 | NUT, COWL SETTING, 5MM ..... | - | - | 2 | 2 | | |
| 12 | 90113-MCJ-000 | SCREW, PAN, 5X15 ..... | - | - | 6 | 6 | | |
| 13 | 90114-MCJ-000 | SCREW, SPECIAL, 6X14 ..... | - | - | 2 | 2 | | |
| 14 | 90683-GR1-003 | CLIP, BODY COVER ..... | - | - | 2 | 2 | | |
| 15 | 96001-06012-07 | BOLT, FLANGE, 6X12 ..... | - | - | 1 | 1 | | |
| 16 | 96300-06012-00 | BOLT, FLANGE, 6X12 ..... | - | - | 1 | 1 | | |
| 17 | 96300-06012-07 | BOLT, FLANGE, 6X12 ..... | - | - | 1 | 1 | | |
| 18 | 64395-MEL-A20 | MAT, L. MIDDLE COWL (D) ..... | - | - | 1 | 1 | -------- -------- | MX |
| | | | - | - | - | 1 | -------- -------- | U |
| 19 | 64394-MEL-A20 | MAT, L. MIDDLE COWL (C) ..... | - | - | 1 | 1 | -------- -------- | MX |
| | | | - | - | - | 1 | -------- -------- | U |

# F-38 LOWER COWL (CBR1000RR4/5)

2-B 5

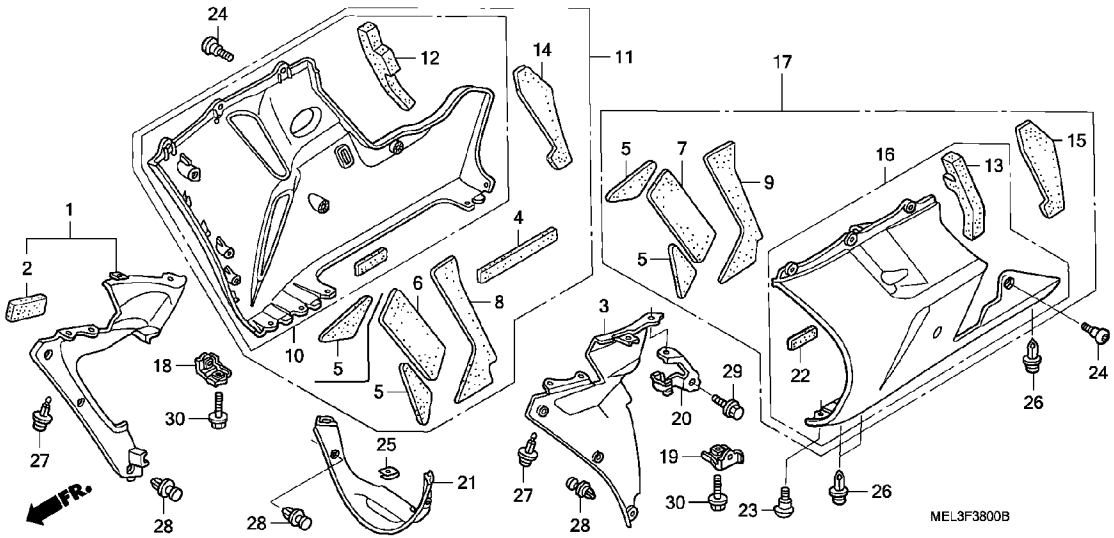


| Ref. No. | L.O.N. | (Relative ref. Number) Description | F.R.T. |
|---|---|---|---|
| 1 | 4111G8 | COWL, INNER MIDDLE :RIGHT ···· | 0.3 |
| | 4111H0 | COWL, INNER MIDDLE :BOTH ····· | 0.5 |
| 3 | 4111G9 | COWL, INNER MIDDLE :LEFT ····· | 0.3 |
| | 4111H0 | COWL, INNER MIDDLE :BOTH ····· | 0.5 |
| 11 | | (10) | |
| | 4111D7 | COWL, LOWER :RIGHT ····· | 0.2 |
| | 4111H1 | COWL, LOWER :BOTH ····· | 0.3 |
| 17 | | (16) | |
| | 4111D6 | COWL, LOWER :LEFT ····· | 0.2 |
| | 4111H1 | COWL, LOWER :BOTH ····· | 0.3 |
| 21 | 4111G7 | COWL, INNER LOWER ····· | 0.2 |

3

| Ref. No. | Part No. | Description | Reqd. QTY CBR1000RR 4 | 5 | 6 | 7 | Serial No. | | Parts catalogue code |
|---|---|---|---|---|---|---|---|---|---|
| 1 | 64325-MEL-000 | COWL, R. INNER MIDDLE ····· | 1 | - | - | - | -------- | -------- | BR,F,G,KO,MX,U |
| | 64325-MEL-010 | ····· | 1 | - | - | - | -------- | -------- | E,ED |
| | | | - | 1 | - | - | | | |
| 2 | 64326-MEL-300 | MAT, INNER MIDDLE COWL ····· | 1 | 1 | - | - | | | |
| 3 | 64375-MEL-000 | COWL, L. INNER MIDDLE ····· | 1 | - | - | - | -------- | -------- | BR,F,G,KO,MX,U |
| | 64375-MEL-010 | ····· | 1 | - | - | - | -------- | -------- | E,ED |
| | | | - | 1 | - | - | | | |
| 4 | 64394-MEL-670 | MAT, R. UNDER COWL ····· | 1 | - | - | - | -------- | -------- | BR,MX |
| | 64394-MEL-A00 | ····· | - | 1 | - | - | -------- | -------- | BR,MX |
| 5 | 64395-MEL-670 | MAT A, UNDER COWL ····· | 4 | - | - | - | -------- | -------- | BR,MX |
| | 64395-MEL-A00 | ····· | - | 3 | - | - | -------- | -------- | BR,MX |
| 6 | 64396-MEL-670 | MAT B, R. UNDER COWL ····· | 1 | - | - | - | -------- | -------- | BR,MX |
| | 64396-MEL-A00 | ····· | - | 1 | - | - | -------- | -------- | BR,MX |
| 7 | 64397-MEL-670 | MAT B, L. UNDER COWL ····· | 1 | - | - | - | -------- | -------- | BR,MX |
| | 64397-MEL-A00 | ····· | - | 1 | - | - | -------- | -------- | BR,MX |
| 8 | 64398-MEL-670 | MAT C, R. UNDER COWL ····· | 1 | - | - | - | -------- | -------- | BR,MX |
| | 64398-MEL-A00 | ····· | - | 1 | - | - | -------- | -------- | BR,MX |
| 9 | 64399-MEL-670 | MAT C, L. UNDER COWL ····· | 1 | - | - | - | -------- | -------- | BR,MX |
| | 64399-MEL-A00 | ····· | - | 1 | - | - | -------- | -------- | BR,MX |
| 10 | 64400-MEL-010ZC | COWL SET, R. UNDER *TYPE3*(WL) | 1 | - | - | - | -------- | -------- | E,ED,F,G,KO,U |
| | 64400-MEL-010ZF | COWL SET, R. UNDER *TYPE1 1*(WL) | 1 | - | - | - | -------- | -------- | E,ED,F,G,KO,U |
| | 64400-MEL-010ZG | COWL SET, R. UNDER *TYPE2 1*(WL) | 1 | - | - | - | -------- | -------- | E,ED,F,G,KO,U |
| | 64400-MEL-D00ZA | COWL SET, R. UNDER *TYPE1*(WL) | - | 1 | - | - | -------- | -------- | E,ED,EK,F,G,KO |
| | 64400-MEL-D00ZB | COWL SET, R. UNDER *TYPE2*(WL) | - | 1 | - | - | -------- | -------- | E,ED,EK,F,G,KO |
| | 64400-MEL-D00ZC | COWL SET, R. UNDER *TYPE3*(WL) | - | 1 | - | - | -------- | -------- | E,ED,EK,F,G |
| | 64400-MEL-U00ZA | COWL SET, R. UNDER *TYPE1*(WL) | - | 1 | - | - | -------- | -------- | U |

# LOWER COWL (CBR1000RR4/5)



| Ref. No. | Part No. | Description | Reqd. QTY CBR1000RR 4 | 5 | 6 | 7 | Serial No. | | Parts catalogue code |
|---|---|---|---|---|---|---|---|---|---|
| 10) | 64400-MEL-U00ZB | COWL SET, R. UNDER *TYPE2*(WL) | - | 1 | - | - | -------- | -------- | U |
| | 64400-MEL-U00ZC | COWL SET, R. UNDER *TYPE3*(WL) | - | 1 | - | - | -------- | -------- | U |
| | 64400-MEL-D11ZA | COWL SET, R. UNDER *TYPE1*(WL) | - | 1 | - | - | -------- | -------- | 2ED,2F,2G,2KO,2U,3E,4EK |
| 11 | 64400-MEL-670ZF | COWL SET, R. UNDER *TYPE1 1*(WL) | 1 | - | - | - | -------- | -------- | MX |
| | 64400-MEL-670ZG | COWL SET, R. UNDER *TYPE2 1*(WL) | 1 | - | - | - | -------- | -------- | BR,MX |
| | 64400-MEL-670ZH | COWL SET, R. UNDER *TYPE3 1*(WL) | 1 | - | - | - | -------- | -------- | BR,MX |
| | 64400-MEL-A00ZA | COWL SET, R. UNDER *TYPE1*(WL) | - | 1 | - | - | -------- | -------- | BR,MX |
| | 64400-MEL-A00ZB | COWL SET, R. UNDER *TYPE2*(WL) | - | 1 | - | - | -------- | -------- | BR,MX |
| | 64400-MEL-A00ZC | COWL SET, R. UNDER *TYPE3*(WL) | - | 1 | - | - | -------- | -------- | BR,MX |
| 12 | 64403-MEL-300 | MAT D, R. UNDER COWL ..... | 1 | 1 | - | - | | | |
| 13 | 64404-MEL-300 | MAT E, L. UNDER COWL ..... | 1 | 1 | - | - | | | |
| 14 | 64407-MEL-670 | MAT F, R. UNDER COWL ..... | 1 | - | - | - | -------- | -------- | BR,MX |
| | 64407-MEL-A00 | ..... | - | 1 | - | - | -------- | -------- | BR,MX |
| 15 | 64408-MEL-670 | MAT F, L. UNDER COWL ..... | 1 | - | - | - | -------- | -------- | BR,MX |
| | 64408-MEL-A00 | ..... | - | 1 | - | - | -------- | -------- | BR,MX |
| 16 | 64450-MEL-010ZC | COWL SET, L. UNDER *TYPE3* .. | 1 | - | - | - | -------- | -------- | E,ED,F,G,KO,U |
| | 64450-MEL-010ZF | COWL SET, L. UNDER *TYPE1 1* | 1 | - | - | - | -------- | -------- | E,ED,F,G,KO,U |
| | 64450-MEL-010ZG | COWL SET, L. UNDER *TYPE2 1* | 1 | - | - | - | -------- | -------- | E,ED,F,G,KO,U |
| | 64450-MEL-D00ZA | COWL SET, L. UNDER *TYPE1*(WL) | - | 1 | - | - | -------- | -------- | E,ED,EK,F,G,KO |
| | 64450-MEL-D00ZB | COWL SET, L. UNDER *TYPE2*(WL) | - | 1 | - | - | -------- | -------- | E,ED,EK,F,G,KO |
| | 64450-MEL-D00ZC | COWL SET, L. UNDER *TYPE3*(WL) | - | 1 | - | - | -------- | -------- | E,ED,EK,F,G |
| | 64450-MEL-U00ZA | COWL SET, L. UNDER *TYPE1*(WL) | - | 1 | - | - | -------- | -------- | U |
| | 64450-MEL-U00ZB | COWL SET, L. UNDER *TYPE2*(WL) | - | 1 | - | - | -------- | -------- | U |
| | 64450-MEL-U00ZC | COWL SET, L. UNDER *TYPE3*(WL) | - | 1 | - | - | -------- | -------- | U |
| | 64450-MEL-D11ZA | COWL SET, L. UNDER *TYPE1*(WL) | - | 1 | - | - | -------- | -------- | 2ED,2F,2G,2KO,2U,3E,4EK |
| 17 | 64450-MEL-670ZF | COWL SET, L. UNDER *TYPE1 1* | 1 | - | - | - | -------- | -------- | MX |
| | 64450-MEL-670ZG | COWL SET, L. UNDER *TYPE2 1* | 1 | - | - | - | -------- | -------- | BR,MX |
| | 64450-MEL-670ZH | COWL SET, L. UNDER *TYPE3 1* | 1 | - | - | - | -------- | -------- | BR,MX |
| | 64450-MEL-A00ZA | COWL SET, L. UNDER *TYPE1*(WL) | - | 1 | - | - | -------- | -------- | BR,MX |
| | 64450-MEL-A00ZB | COWL SET, L. UNDER *TYPE2*(WL) | - | 1 | - | - | -------- | -------- | BR,MX |
| | 64450-MEL-A00ZC | COWL SET, L. UNDER *TYPE3*(WL) | - | 1 | - | - | -------- | -------- | BR,MX |
| 18 | 64541-MEL-000 | STAY, R. FR. UNDER COWL ..... | 1 | 1 | - | - | | | |
| 19 | 64542-MEL-000 | STAY, L. FR. UNDER COWL ..... | 1 | 1 | - | - | | | |
| 20 | 64547-MEL-000 | STAY, MIDDLE COWL UPPER ..... | 1 | - | - | - | | | |
| | 64547-MEL-D00 | ..... | - | 1 | - | - | | | |
| 21 | 64560-MEL-000 | COWL, INNER LOWER ..... | 1 | 1 | - | - | | | |
| 22 | 81257-GAZ-300 | INSULATOR, LUGGAGE BOX ..... | 2 | 2 | - | - | | | |
| 23 | 90104-MN4-000 | SCREW, SPECIAL, 6X19 ..... | 1 | 1 | - | - | | | |
| 24 | 90114-MCJ-000 | SCREW, SPECIAL, 6X14 ..... | 4 | 4 | - | - | | | |
| 25 | 90320-MM5-000 | NUT, SPRING, 6MM ..... | 1 | 1 | - | - | | | |
| 26 | 90683-GR1-003 | CLIP, BODY COVER ..... | 4 | 4 | - | - | | | |
| 27 | 90683-MBW-003 | CLIP, BODY ..... | 4 | 4 | - | - | | | |
| 28 | 91549-MW0-790ZA | CLIP, PANEL FIXING *NH1*.....BLACK | 8 | 8 | - | - | | | |
| 29 | 96300-06012-07 | BOLT, FLANGE, 6X12 ..... | 1 | 1 | - | - | | | |
| 30 | 96300-06020-00 | BOLT, FLANGE, 6X20 ..... | 2 | 2 | - | - | | | |

# F-38-1 LOWER COWL (CBR1000RR6/7)

2-B 7

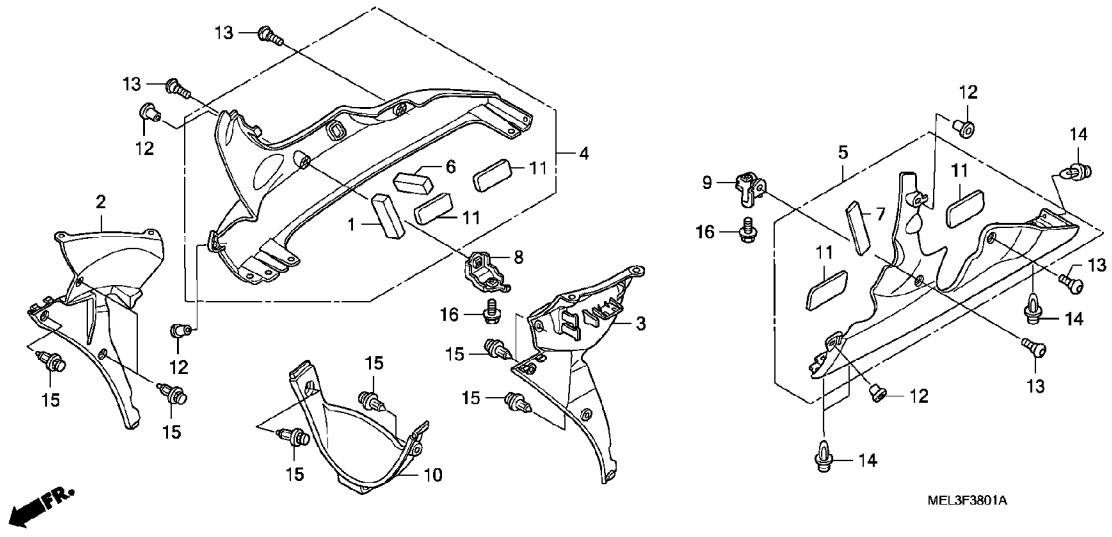


| Ref. No. | L.O.N. | (Relative ref. Number) Description | F.R.T. |
|---|---|---|---|
| 2 | 4111G8 | COWL, INNER MIDDLE :RIGHT ···· | 0.4 |
| | 4111H0 | COWL, INNER MIDDLE :BOTH ····· | 0.7 |
| 3 | 4111G9 | COWL, INNER MIDDLE :LEFT ····· | 0.4 |
| | 4111H0 | COWL, INNER MIDDLE :BOTH ····· | 0.7 |
| 4 | 4111D7 | COWL, LOWER :RIGHT ····· | 0.2 |
| | 4111H1 | COWL, LOWER :BOTH ····· | 0.2 |
| 5 | 4111D6 | COWL, LOWER :LEFT ····· | 0.2 |
| | 4111H1 | COWL, LOWER :BOTH ····· | 0.2 |
| 10 | 4111G7 | COWL, INNER LOWER ····· | 0.3 |

| Ref. No. | Part No. | Description | Reqd. QTY CBR1000RR 4 | 5 | 6 | 7 | Serial No. | Parts catalogue code |
|---|---|---|---|---|---|---|---|---|
| 1 | 50133-MEL-300 | MAT, L. ENGINE HANGER ····· | - | - | 1 | 1 | | |
| 2 | 64325-MEL-D20 | COWL, R. INNER MIDDLE ····· | - | - | 1 | 1 | | |
| 3 | 64375-MEL-D20 | COWL, L. INNER MIDDLE ····· | - | - | 1 | 1 | | |
| 4 | 64400-MEL-D20ZA | COWL SET, R. UNDER *TYPE1*(WL) | - | - | 1 | - | -------- -------- | E,ED,EK,F,KO,MX,U |
| | 64400-MEL-D20ZB | COWL SET, R. UNDER *TYPE2*(WL) | - | - | 1 | - | | |
| | | | - | - | - | 1 | -------- -------- | BR,E,ED,EK,F,KO,MX,U |
| | 64400-MEL-D30ZB | ····· | - | - | - | 1 | -------- -------- | 2ED,2F,3E,4EK |
| 5 | 64450-MEL-D20ZA | COWL SET, L. UNDER *TYPE1*(WL) | - | - | 1 | - | -------- -------- | E,ED,EK,F,KO,MX,U |
| | 64450-MEL-D20ZB | COWL SET, L. UNDER *TYPE2*(WL) | - | - | 1 | - | | |
| | | | - | - | - | 1 | -------- -------- | BR,E,ED,EK,F,KO,MX,U |
| | 64450-MEL-D30ZB | ····· | - | - | - | 1 | -------- -------- | 2ED,2F,3E,4EK |
| 6 | 64491-MEL-D20 | MAT A, R. UNDER COWL ····· | - | - | 1 | 1 | | |
| 7 | 64492-MEL-D20 | MAT A, L. UNDER COWL ····· | - | - | 1 | 1 | | |
| 8 | 64541-MEL-D20 | STAY, R. FR. UNDER COWL ····· | - | - | 1 | - | | |
| | 64541-MEL-D30 | ····· | - | - | - | 1 | | |
| 9 | 64542-MEL-D20 | STAY, L. FR. UNDER COWL ····· | - | - | 1 | 1 | | |
| 10 | 64560-MEL-D20 | COWL, INNER LOWER ····· | - | - | 1 | 1 | | |
| 11 | 81257-GAZ-300 | INSULATOR, LUGGAGE BOX ····· | - | - | 4 | 4 | | |
| 12 | 90111-KW3-003 | NUT, COWL SETTING, 5MM ····· | - | - | 4 | 4 | | |
| 13 | 90114-MCJ-000 | SCREW, SPECIAL, 6X14 ····· | - | - | 4 | 4 | | |
| 14 | 90683-GR1-003 | CLIP, BODY COVER ····· | - | - | 4 | 4 | | |
| 15 | 90683-MBW-003 | CLIP, BODY ····· | - | - | 8 | 8 | | |
| 16 | 96300-06020-00 | BOLT, FLANGE, 6X20 ····· | - | - | 2 | 2 | | |

# CAUTION LABEL



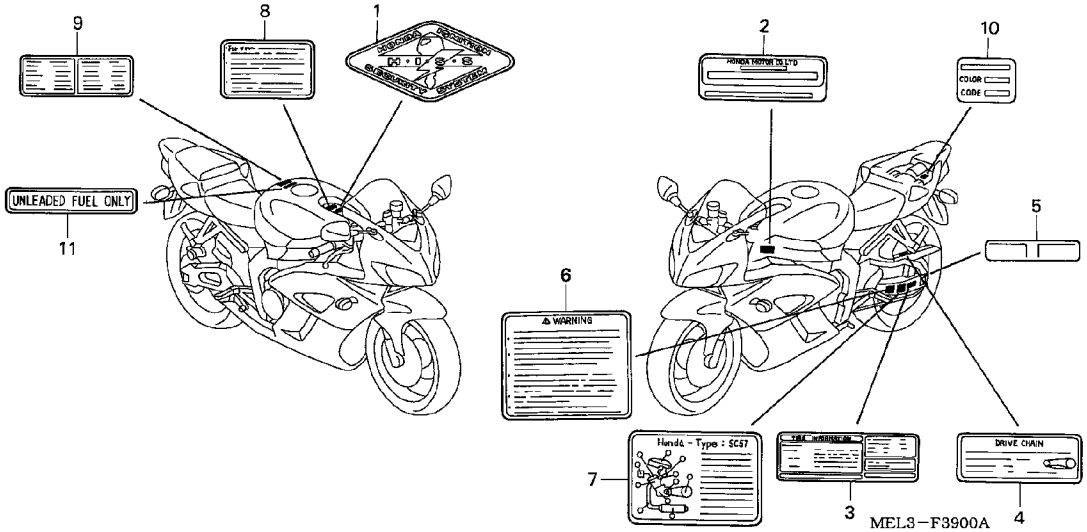


| Ref. No. | L.O.N. | (Relative ref. Number) Description | F.R.T. |
|---|---|---|---|
| | | NO INFORMATION ..... | |

| Ref. No. | Part No. | Description | Reqd. QTY CBR1000RR 4 | 5 | 6 | 7 | Serial No. | | Parts catalogue code |
|---|---|---|---|---|---|---|---|---|---|
| 1 | 17528-MAT-D70 | MARK, HISS ..... | 1 | 1 | 1 | 1 | -------- | -------- | BR,E,ED,EK,F,G,KO,U,2ED,2F,2G,2KO,2U,3E,4EK |
| 2 | 87501-MBW-P00 | PLATE, REGISTERED NUMBER .... | 1 | 1 | 1 | 1 | -------- | -------- | E,ED,EK,F,G,2ED,2F,2G,3E,4EK |
| 3 | 87505-MEL-620 | LABEL, TIRE (FRENCH) ..... | 1 | 1 | - | - | -------- | -------- | F,2F |
| | 87505-MEL-630 | LABEL, TIRE ..... | 1 | 1 | - | - | -------- | -------- | BR |
| | 87505-MEL-640 | ..... | 1 | 1 | - | - | -------- | -------- | E,ED,EK,G,U,2ED,2G,2U,3E,4EK |
| | 87505-MEL-660 | ..... | 1 | 1 | - | - | -------- | -------- | MX |
| | 87505-MEL-750 | LABEL, TIRE (KOREAN) ..... | 1 | 1 | - | - | -------- | -------- | KO,2KO |
| | 87505-MEL-M20 | LABEL, TIRE ..... | - | - | 1 | - | -------- | -------- | MX |
| | 87505-MEL-U20 | ..... | - | - | 1 | - | -------- | -------- | U |
| | 87505-MEL-B20 | ..... | - | - | 1 | 1 | -------- | -------- | BR |
| | 87505-MEL-D20 | ..... | - | - | 1 | 1 | -------- | -------- | E,ED,EK |
| | | | - | - | - | 1 | -------- | -------- | U |
| | 87505-MEL-F20 | LABEL, TIRE (FRENCH) ..... | - | - | 1 | 1 | -------- | -------- | F |
| | 87505-MEL-K20 | LABEL, TIRE (KOREAN) ..... | - | - | 1 | 1 | -------- | -------- | KO |
| | 87505-MEL-D40 | LABEL, TIRE ..... | - | - | - | 1 | -------- | -------- | 2ED,3E,4EK |
| | 87505-MEL-F40 | ..... | - | - | - | 1 | -------- | -------- | 2F |
| | 87505-MEL-M30 | ..... | - | - | - | 1 | -------- | -------- | MX |
| 4 | 87507-KFK-750 | LABEL, DRIVE CHAIN (KOREAN) . | 1 | 1 | 1 | 1 | -------- | -------- | KO,2KO |
| | 87507-MCW-D20 | LABEL, DRIVE CHAIN ..... | 1 | 1 | 1 | 1 | -------- | -------- | E,ED,EK,G,U,2ED,2G,2U,3E,4EK |
| | 87507-MCW-F20 | LABEL, DRIVE CHAIN (FRENCH) . | 1 | 1 | 1 | 1 | -------- | -------- | F,2F |
| | 87507-MEE-660 | LABEL, DRIVE CHAIN ..... | 1 | 1 | 1 | 1 | -------- | -------- | BR |
| | 87507-MEE-760 | ..... | 1 | 1 | 1 | 1 | -------- | -------- | MX |
| 5 | 87508-MEL-620 | LABEL, CHAIN ADJUSTER (FRENCH) | 1 | 1 | 1 | 1 | -------- | -------- | F,2F |
| | 87508-MEL-630 | LABEL, CHAIN ADJUSTER ..... | 1 | 1 | 1 | 1 | -------- | -------- | BR |
| | 87508-MEL-640 | ..... | 1 | 1 | 1 | 1 | -------- | -------- | E,ED,EK,G,U,2ED,2G,2U,3E,4EK |
| | 87508-MEL-660 | ..... | 1 | 1 | 1 | 1 | -------- | -------- | MX |
| | 87508-MEL-750 | LABEL, CHAIN ADJUSTER (KOREAN) | 1 | 1 | 1 | 1 | -------- | -------- | KO,2KO |
| 6 | 87512-MCF-D30 | LABEL, ACCESSORIES & LOADING | 1 | 1 | 1 | 1 | -------- | -------- | E,ED,EK,G,U,2ED,2G,2U,3E,4EK |

# CAUTION LABEL



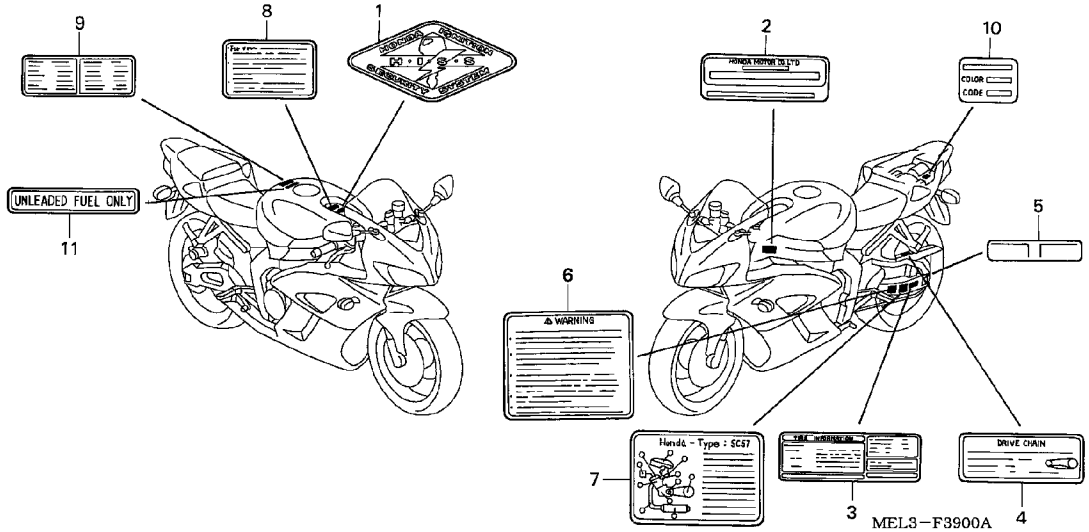


| Ref. No. | Part No. | Description | Reqd. QTY CBR1000RR 4 | 5 | 6 | 7 | Serial No. | | Parts catalogue code |
|---|---|---|---|---|---|---|---|---|---|
| (6) | 87512-MCF-F20 | LABEL, ACCESSORIES & LOADING (FRENCH) | 1 | 1 | 1 | 1 | -------- | -------- | F,2F |
| | 87512-MEE-660 | MARK, ACCESSORIES & LOADING CAUTION | 1 | 1 | 1 | 1 | -------- | -------- | BR |
| | 87512-MEE-760 | LABEL, LOADING ····· | 1 | 1 | - | - | -------- | -------- | MX |
| | 87512-MEE-761 | ····· | - | - | 1 | 1 | -------- | -------- | MX |
| 7 | 87520-MEL-620 | LABEL, TAMPER PROOF ····· | 1 | 1 | - | - | -------- | -------- | F,2F |
| | 87520-MEL-F21 | ····· | - | - | 1 | 1 | -------- | -------- | F |
| | 87520-MEL-F40 | ····· | - | - | - | 1 | -------- | -------- | 2F |
| 8 | 87560-KCH-630 | LABEL, DRIVE (PORUTGUESE) ··· | 1 | 1 | 1 | 1 | -------- | -------- | BR |
| | 87560-MBR-870 | LABEL, DRIVE CAUTION (KOREAN) | 1 | - | - | - | -------- | -------- | KO |
| | 87560-MM5-900ZA | MARK, DRIVE CAUTION *TYPEG* · | 1 | 1 | 1 | 1 | -------- | -------- | MX |
| | 87560-MZ0-611 | LABEL, DRIVE (ENGLISH/FRENCH/GERMANY) | 1 | 1 | 1 | 1 | -------- | -------- | E,ED,EK,F,G,2ED,2F,2G,3E,4EK |
| | 87560-MBR-871 | LABEL, DRIVE CAUTION (KOREAN) | - | 1 | 1 | 1 | -------- | -------- | KO,2KO |
| | 87560-MZ0-670 | LABEL, DRIVE ····· | 1 | 1 | 1 | 1 | -------- | -------- | U,2U |
| 9 | 87560-MZ1-620 | LABEL, FRENCH TRANSLATION ··· | 1 | 1 | 1 | 1 | -------- | -------- | F,2F |
| 10 | 87565-MEL-000ZA | LABEL, COLOR *TYPE1*(NH1E) ·· | 1 | - | - | - | -------- | -------- | E,ED,F,G,KO,U |
| | 87565-MEL-000ZB | LABEL, COLOR *TYPE2*(R258BB) | 1 | - | - | - | -------- | -------- | E,ED,F,G,KO,U |
| | 87565-MEL-000ZC | LABEL, COLOR *TYPE3*(NH341KB) | 1 | - | - | - | -------- | -------- | E,ED,F,G,KO,U |
| | 87565-MEL-000ZD | LABEL, COLOR *TYPE4*(NH1) ··· | 1 | - | - | - | -------- | -------- | MX |
| | 87565-MEL-000ZE | LABEL, COLOR *TYPE5*(R258B) · | 1 | - | - | - | -------- | -------- | MX |
| | 87565-MEL-000ZF | LABEL, COLOR *TYPE6*(NH411B) | 1 | - | - | - | -------- | -------- | MX |
| | 87565-MEL-D00ZA | LABEL, COLOR *TYPE4*(NH1E) ·· | - | 1 | - | - | -------- | -------- | MX,U |
| | 87565-MEL-D00ZB | LABEL, COLOR *TYPE5*(R258) ·· | - | 1 | - | - | -------- | -------- | MX,U |
| | 87565-MEL-D00ZC | LABEL, COLOR *TYPE6*(YR183) · | - | 1 | - | - | -------- | -------- | MX,U |
| | 87565-MEL-D00ZD | LABEL, COLOR *TYPE1*(NH1) ··· | - | 1 | - | - | -------- | -------- | E,ED,EK,F,G,KO |
| | 87565-MEL-D00ZE | LABEL, COLOR *TYPE2*(R258H) · | - | 1 | - | - | -------- | -------- | E,ED,EK,F,G,KO |
| | 87565-MEL-D00ZF | LABEL, COLOR *TYPE3*(PB215H) | - | 1 | - | - | -------- | -------- | E,ED,EK,F,G |

# CAUTION LABEL



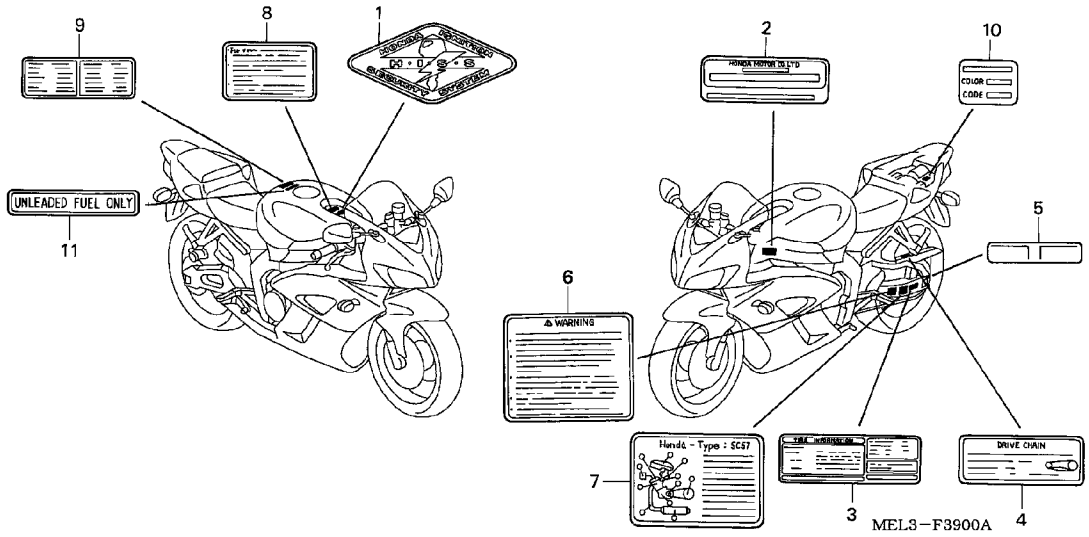


| Ref. No. | Part No. | Description | Reqd. QTY CBR1000RR 4 | 5 | 6 | 7 | Serial No. | | Parts catalogue code |
|---|---|---|---|---|---|---|---|---|---|
| 10) | 87565-MEL-D10ZA | LABEL, COLOR *TYPE1*(PB123) · | - | 1 | - | - | -------- | -------- | 2ED,2F,2G,2KO,2U,3E,4EK |
| | 87565-MEL-D20ZA | LABEL, COLOR *TYPE1*(NHB01BA) | - | - | 1 | - | -------- | -------- | E,ED,EK,F,KO |
| | 87565-MEL-D20ZB | LABEL, COLOR *TYPE2*(R258BA) | - | - | 1 | - | -------- | -------- | E,ED,EK,F,KO |
| | 87565-MEL-D20ZC | LABEL, COLOR *TYPE3*(NH167EA) | - | - | 1 | - | -------- | -------- | E,ED,EK,F |
| | 87565-MEL-D20ZD | LABEL, COLOR *TYPE4*(NHB01BB) | - | - | 1 | - | -------- | -------- | MX,U |
| | 87565-MEL-D20ZE | LABEL, COLOR *TYPE5*(R258BB) | - | - | 1 | - | -------- | -------- | MX,U |
| | 87565-MEL-D20ZF | LABEL, COLOR *TYPE6*(NH167EB) | - | - | 1 | - | -------- | -------- | MX,U |
| | 87565-MEL-D20ZG | LABEL, COLOR *TYPE7*(PB284Y) | - | - | 1 | - | -------- | -------- | MX,U |
| 11 | 87586-MEL-630 | LABEL, FUEL CAUTION ····· | 1 | 1 | 1 | 1 | -------- | -------- | BR |
| | 87586-MEL-670 | ····· | 1 | 1 | 1 | 1 | -------- | -------- | MX |
| | 87135-MCF-000 | LABEL, FUEL CAUTION (ENGLISH/FRENCH/GERMAN) | 1 | 1 | 1 | 1 | -------- | -------- | E,ED,EK,F,G,U,2ED,2F,2G,2U,3E,4EK |
| | 87586-MEL-750 | LABEL, FUEL CAUTION ····· | 1 | 1 | 1 | 1 | -------- | -------- | KO,2KO |

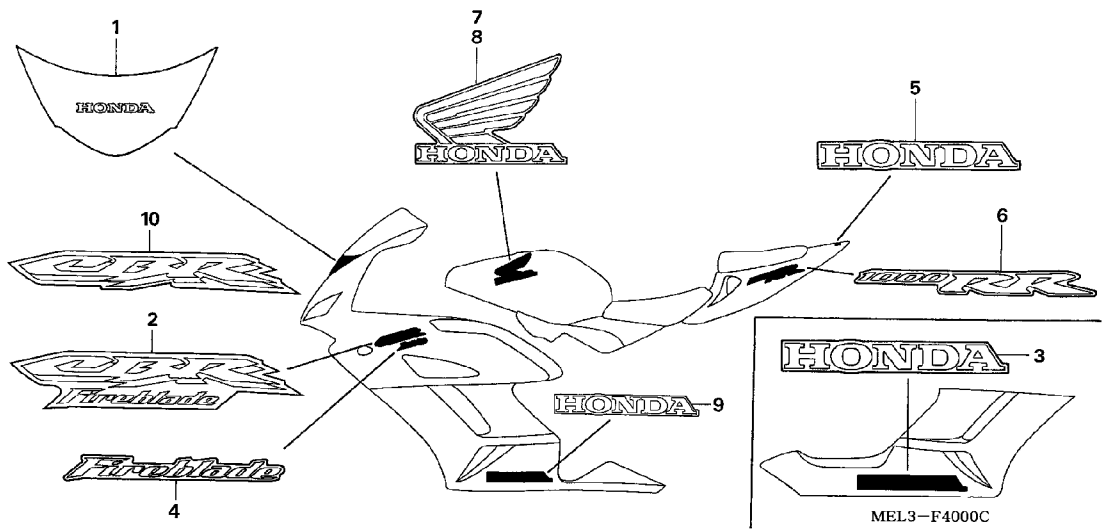


| Ref. No. | L.O.N. | (Relative ref. Number) Description | F.R.T. |
|---|---|---|---|
| | | NO INFORMATION ..... | |

| Ref. No. | Part No. | Description | Reqd. QTY CBR1000RR 4 | 5 | 6 | 7 | Serial No. | | Parts catalogue code |
|---|---|---|---|---|---|---|---|---|---|
| 1 | 64805-MEL-000ZA | STRIPE, WINDSCREEN *TYPE1* -- | 1 | 1 | - | - | -------- | -------- | E,ED,EK,F,G,KO |
| | | | 1 | - | - | - | -------- | -------- | MX,U |
| 2 | 64811-MEL-D00ZA | MARK, MIDDLE COWL *TYPE1* --- | - | 2 | - | - | -------- | -------- | E,ED,EK,F,G,KO |
| 3 | 64819-MEL-000ZA | MARK, UNDER COWL *TYPE1* (HONDA) | 1 | - | - | - | -------- | -------- | E,ED,F,G,KO,U |
| | 64819-MEL-000ZB | MARK, UNDER COWL *TYPE2* (HONDA) | 1 | - | - | - | -------- | -------- | E,ED,F,G,KO,U |
| | 64819-MEL-000ZD | MARK, UNDER COWL *TYPE4* (HONDA) | 1 | - | - | - | -------- | -------- | MX |
| | 64819-MEL-D00ZE | MARK, UNDER COWL *TYPE1* (HONDA) | - | 1 | - | - | -------- | -------- | E,ED,EK,F,G,KO |
| 4 | 64820-MEL-000ZA | MARK *TYPE1*(FIREBLADE) ----- | 2 | - | - | - | -------- | -------- | E,ED,F,G,KO,U |
| | 64820-MEL-000ZB | MARK *TYPE2*(FIREBLADE) ----- | 2 | - | - | - | -------- | -------- | E,ED,F,G,KO,U |
| 5 | 64841-MEL-000ZA | MARK, RR. SEAT COWL *TYPE1* (HONDA) | 1 | - | - | - | -------- | -------- | E,ED,F,G,KO,MX,U |
| | 64841-MEL-000ZB | MARK, RR. SEAT COWL *TYPE2* (HONDA) | 1 | - | - | - | -------- | -------- | E,ED,F,G,KO,U |
| | 64841-MEL-D00ZA | MARK, RR. SEAT COWL *TYPE1* (HONDA) | - | 1 | - | - | -------- | -------- | E,ED,EK,F,G,KO |
| 6 | 64842-MEL-000ZA | MARK, RR. SEAT COWL *TYPE1* - | 2 | - | - | - | -------- | -------- | E,ED,F,G,KO,MX,U |
| | 64842-MEL-000ZB | MARK, RR. SEAT COWL *TYPE2* - | 2 | - | - | - | -------- | -------- | E,ED,F,G,KO,U |
| | 64842-MEL-D00ZA | MARK, RR. SEAT COWL *TYPE1* - | - | 2 | - | - | -------- | -------- | E,ED,EK,F,G,KO |
| 7 | 64855-MEL-000ZA | MARK, R. TOP SHELTER *TYPE1* | 1 | - | - | - | -------- | -------- | E,ED,F,G,KO,MX,U |
| | 64855-MEL-000ZB | MARK, R. TOP SHELTER *TYPE2* | 1 | - | - | - | -------- | -------- | E,ED,F,G,KO,U |
| | 64855-MEL-D00ZA | MARK, R. TOP SHELTER *TYPE1* | - | 1 | - | - | -------- | -------- | E,ED,EK,F,G,KO |
| 8 | 64856-MEL-000ZA | MARK, L. TOP SHELTER *TYPE1* | 1 | - | - | - | -------- | -------- | E,ED,F,G,KO,MX,U |
| | 64856-MEL-000ZB | MARK, L. TOP SHELTER *TYPE2* | 1 | - | - | - | -------- | -------- | E,ED,F,G,KO,U |
| | 64856-MEL-D00ZA | MARK, L. TOP SHELTER *TYPE1* | - | 1 | - | - | -------- | -------- | E,ED,EK,F,G,KO |

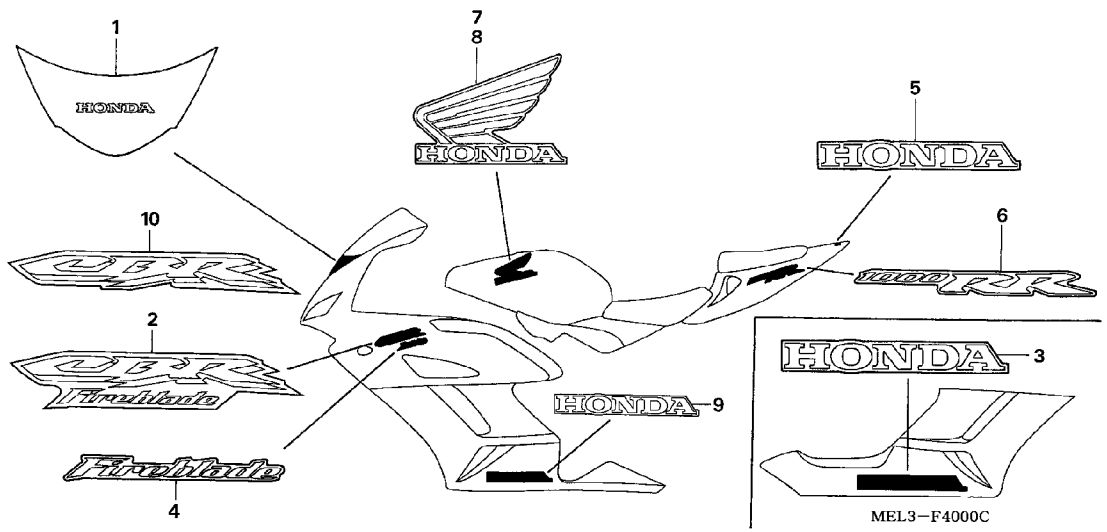


| Ref. No. | Part No. | Description | Reqd. QTY CBR1000RR 4 | 5 | 6 | 7 | Serial No. | | Parts catalogue code |
|---|---|---|---|---|---|---|---|---|---|
| 9 | 64825-MEL-D00ZF | MARK, UNDER COWL *TYPE1* (HONDA) | - | 1 | - | - | -------- | -------- | E,ED,EK,F,G,KO |
| 10 | 64811-MEL-000ZA | MARK, MIDDLE COWL *TYPE1* ··· | 2 | - | - | - | -------- | -------- | E,ED,F,G,KO,MX,U |
| | 64811-MEL-000ZB | MARK, MIDDLE COWL *TYPE2* ··· | 2 | - | - | - | -------- | -------- | E,ED,F,G,KO,U |

3

# STRIPE/MARK(2)



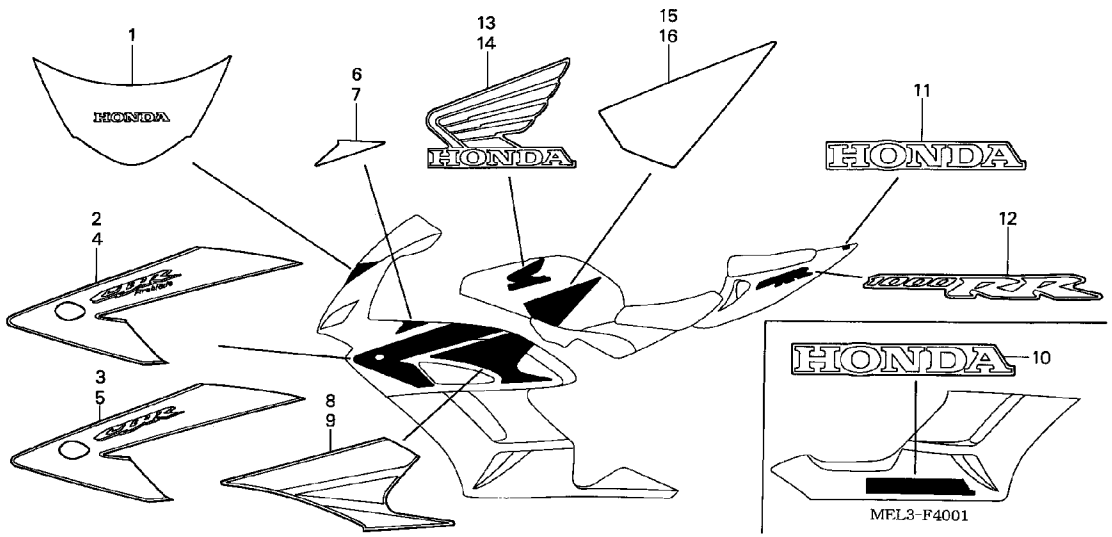


| Ref. No. | L.O.N. | (Relative ref. Number) Description | F.R.T. |
|---|---|---|---|
| | | NO INFORMATION ..... | |

| Ref. No. | Part No. | Description | Reqd. QTY CBR1000RR 4 | 5 | 6 | 7 | Serial No. | | Parts catalogue code |
|---|---|---|---|---|---|---|---|---|---|
| 1 | 64805-MEL-000ZA | STRIPE, WINDSCREEN *TYPE1* -- | 1 | - | - | - | | | |
| 2 | 64813-MEL-000ZA | STRIPE A, R. MIDDLE COWL *TYPE1* | 1 | - | - | - | -------- | -------- | E,ED,F,G,KO,U |
| 3 | 64813-MEL-670ZA | STRIPE A, R. MIDDLE COWL *TYPE2* | 1 | - | - | - | -------- | -------- | BR,MX |
| | 64813-MEL-670ZC | STRIPE A, R. MIDDLE COWL *TYPE1* | 1 | - | - | - | -------- | -------- | BR,MX |
| 4 | 64814-MEL-000ZA | STRIPE A, L. MIDDLE COWL *TYPE1* | 1 | - | - | - | -------- | -------- | E,ED,F,G,KO,U |
| 5 | 64814-MEL-670ZA | STRIPE A, L. MIDDLE COWL *TYPE2* | 1 | - | - | - | -------- | -------- | BR,MX |
| | 64814-MEL-670ZC | STRIPE A, L. MIDDLE COWL *TYPE1* | 1 | - | - | - | -------- | -------- | BR,MX |
| 6 | 64815-MEL-000ZA | STRIPE B, R. MIDDLE COWL *TYPE1* | 1 | - | - | - | -------- | -------- | E,ED,F,G,KO,U |
| 7 | 64816-MEL-000ZA | STRIPE B, L. MIDDLE COWL *TYPE1* | 1 | - | - | - | -------- | -------- | E,ED,F,G,KO,U |
| 8 | 64817-MEL-000ZA | STRIPE C, R. MIDDLE COWL *TYPE1* | 1 | - | - | - | -------- | -------- | E,ED,F,G,KO,U |
| | 64817-MEL-670ZA | ..... | 1 | - | - | - | -------- | -------- | BR,MX |
| | 64817-MEL-670ZB | STRIPE C, R. MIDDLE COWL *TYPE2* | 1 | - | - | - | -------- | -------- | BR,MX |
| 9 | 64818-MEL-000ZA | STRIPE C, L. MIDDLE COWL *TYPE1* | 1 | - | - | - | -------- | -------- | E,ED,F,G,KO,U |
| | 64818-MEL-670ZA | ..... | 1 | - | - | - | -------- | -------- | BR,MX |
| | 64818-MEL-670ZB | STRIPE C, L. MIDDLE COWL *TYPE2* | 1 | - | - | - | -------- | -------- | BR,MX |

# STRIPE/MARK(2)



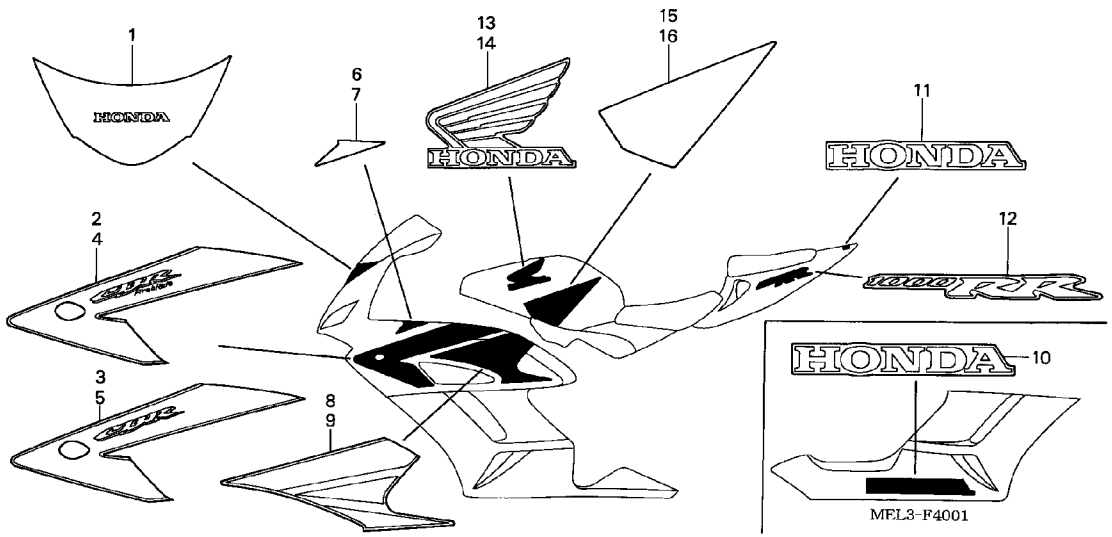


| Ref. No. | Part No. | Description | Reqd. QTY CBR1000RR 4 | 5 | 6 | 7 | Serial No. | | Parts catalogue code |
|---|---|---|---|---|---|---|---|---|---|
| 10 | 64819-MEL-000ZB | MARK, UNDER COWL *TYPE2* (HONDA) | 1 | - | - | - | -------- | -------- | BR,MX |
| | 64819-MEL-000ZC | MARK, UNDER COWL *TYPE3* (HONDA) | 1 | - | - | - | -------- | -------- | E,ED,F,G,KO,U |
| | 64819-MEL-000ZE | MARK, UNDER COWL *TYPE5* (HONDA) | 1 | - | - | - | -------- | -------- | BR,MX |
| 11 | 64841-MEL-000ZB | MARK, RR. SEAT COWL *TYPE2* (HONDA) | 1 | - | - | - | -------- | -------- | BR,MX |
| | 64841-MEL-000ZC | MARK, RR. SEAT COWL *TYPE3* (HONDA) | 1 | - | - | - | -------- | -------- | E,ED,F,G,KO,U |
| | 64841-MEL-000ZD | MARK, RR. SEAT COWL *TYPE4* (HONDA) | 1 | - | - | - | -------- | -------- | BR,MX |
| 12 | 64842-MEL-000ZB | MARK, RR. SEAT COWL *TYPE2* • | 2 | - | - | - | -------- | -------- | BR,MX |
| | 64842-MEL-000ZC | MARK, RR. SEAT COWL *TYPE3* • | 2 | - | - | - | -------- | -------- | E,ED,F,G,KO,U |
| | 64842-MEL-000ZD | MARK, RR. SEAT COWL *TYPE4* • | 2 | - | - | - | -------- | -------- | BR,MX |
| 13 | 64851-MEL-000ZA | MARK, R. TOP SHELTER *TYPE1* | 1 | - | - | - | -------- | -------- | BR,MX |
| | 64851-MEL-000ZB | MARK, R. TOP SHELTER *TYPE2* | 1 | - | - | - | -------- | -------- | E,ED,F,G,KO,U |
| | 64851-MEL-000ZC | MARK, R. TOP SHELTER *TYPE3* | 1 | - | - | - | -------- | -------- | BR,MX |
| 14 | 64852-MEL-000ZA | MARK, L. TOP SHELTER *TYPE1* | 1 | - | - | - | -------- | -------- | BR,MX |
| | 64852-MEL-000ZB | MARK, L. TOP SHELTER *TYPE2* | 1 | - | - | - | -------- | -------- | E,ED,F,G,KO,U |
| | 64852-MEL-000ZC | MARK, L. TOP SHELTER *TYPE3* | 1 | - | - | - | -------- | -------- | BR,MX |
| 15 | 64853-MEL-000ZA | STRIPE, R. TOP SHELTER *TYPE1* | 1 | - | - | - | -------- | -------- | E,ED,F,G,KO,U |
| | 64853-MEL-000ZB | STRIPE, R. TOP SHELTER *TYPE2* | 1 | - | - | - | -------- | -------- | BR,MX |
| 16 | 64854-MEL-000ZA | STRIPE, L. TOP SHELTER *TYPE1* | 1 | - | - | - | -------- | -------- | E,ED,F,G,KO,U |
| | 64854-MEL-000ZB | STRIPE, L. TOP SHELTER *TYPE2* | 1 | - | - | - | -------- | -------- | BR,MX |

# STRIPE/MARK(3)



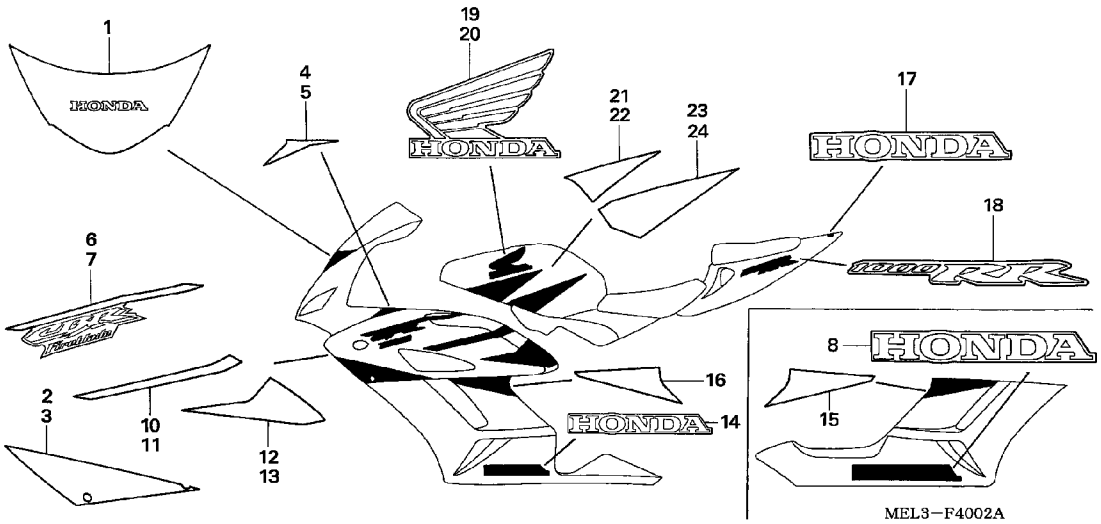


| Ref. No. | L.O.N. | (Relative ref. Number) Description | F.R.T. |
|---|---|---|---|
| | | NO INFORMATION ..... | |

| Ref. No. | Part No. | Description | Reqd. QTY CBR1000RR 4 | 5 | 6 | 7 | Serial No. | | Parts catalogue code |
|---|---|---|---|---|---|---|---|---|---|
| 1 | 64805-MEL-000ZA | STRIPE, WINDSCREEN *TYPE1* -- | - | 1 | - | - | -------- | -------- | E,ED,EK,F,G,KO |
| 2 | 64813-MEL-D00ZA | STRIPE A, R. MIDDLE COWL *TYPE1* | - | 1 | - | - | -------- | -------- | E,ED,EK,F,G,KO |
| | 64813-MEL-D00ZB | STRIPE A, R. MIDDLE COWL *TYPE2* | - | 1 | - | - | -------- | -------- | E,ED,EK,F,G |
| 3 | 64814-MEL-D00ZA | STRIPE A, L. MIDDLE COWL *TYPE1* | - | 1 | - | - | -------- | -------- | E,ED,EK,F,G,KO |
| | 64814-MEL-D00ZB | STRIPE A, L. MIDDLE COWL *TYPE2* | - | 1 | - | - | -------- | -------- | E,ED,EK,F,G |
| 4 | 64815-MEL-D00ZA | STRIPE B, R. MIDDLE COWL *TYPE1* | - | 1 | - | - | -------- | -------- | E,ED,EK,F,G,KO |
| | 64815-MEL-D00ZB | STRIPE B, R. MIDDLE COWL *TYPE2* | - | 1 | - | - | -------- | -------- | E,ED,EK,F,G |
| 5 | 64816-MEL-D00ZA | STRIPE B, L. MIDDLE COWL *TYPE1* | - | 1 | - | - | -------- | -------- | E,ED,EK,F,G,KO |
| | 64816-MEL-D00ZB | STRIPE B, L. MIDDLE COWL *TYPE2* | - | 1 | - | - | -------- | -------- | E,ED,EK,F,G |
| 6 | 64817-MEL-D00ZA | STRIPE C, R. MIDDLE COWL *TYPE1* | - | 1 | - | - | -------- | -------- | E,ED,EK,F,G,KO |
| | 64817-MEL-D00ZB | STRIPE C, R. MIDDLE COWL *TYPE2* | - | 1 | - | - | -------- | -------- | E,ED,EK,F,G |
| 7 | 64818-MEL-D00ZA | STRIPE C, L. MIDDLE COWL *TYPE1* | - | 1 | - | - | -------- | -------- | E,ED,EK,F,G,KO |
| | 64818-MEL-D00ZB | STRIPE C, L. MIDDLE COWL *TYPE2* | - | 1 | - | - | -------- | -------- | E,ED,EK,F,G |
| 8 | 64819-MEL-D00ZD | MARK, UNDER COWL *TYPE2* (HONDA) | - | 1 | - | - | -------- | -------- | E,ED,EK,F,G,KO |

# STRIPE/MARK(3)



| Ref. No. | Part No. | Description | Reqd. QTY CBR1000RR 4 | 5 | 6 | 7 | Serial No. | | Parts catalogue code |
|---|---|---|---|---|---|---|---|---|---|
| 10 | 64821-MEL-D00ZA | STRIPE D, R. MIDDLE COWL *TYPE1* | - | 1 | - | - | -------- | -------- | E,ED,EK,F,G,KO |
| | 64821-MEL-D00ZB | STRIPE D, R. MIDDLE COWL *TYPE2* | - | 1 | - | - | -------- | -------- | E,ED,EK,F,G |
| 11 | 64822-MEL-D00ZA | STRIPE D, L. MIDDLE COWL *TYPE1* | - | 1 | - | - | -------- | -------- | E,ED,EK,F,G,KO |
| | 64822-MEL-D00ZB | STRIPE D, L. MIDDLE COWL *TYPE2* | - | 1 | - | - | -------- | -------- | E,ED,EK,F,G |
| 12 | 64823-MEL-D00ZA | STRIPE E, R. MIDDLE COWL *TYPE1* | - | 1 | - | - | -------- | -------- | E,ED,EK,F,G,KO |
| | 64823-MEL-D00ZB | STRIPE E, R. MIDDLE COWL *TYPE2* | - | 1 | - | - | -------- | -------- | E,ED,EK,F,G |
| 13 | 64824-MEL-D00ZA | STRIPE E, L. MIDDLE COWL *TYPE1* | - | 1 | - | - | -------- | -------- | E,ED,EK,F,G,KO |
| | 64824-MEL-D00ZB | STRIPE E, L. MIDDLE COWL *TYPE2* | - | 1 | - | - | -------- | -------- | E,ED,EK,F,G |
| 14 | 64825-MEL-D00ZD | MARK, UNDER COWL *TYPE2* (HONDA) | - | 1 | - | - | -------- | -------- | E,ED,EK,F,G,KO |
| 15 | 64826-MEL-D00ZA | STRIPE, R. UNDER COWL *TYPE1* | - | 1 | - | - | -------- | -------- | E,ED,EK,F,G,KO |
| | 64826-MEL-D00ZB | STRIPE, R. UNDER COWL *TYPE2* | - | 1 | - | - | -------- | -------- | E,ED,EK,F,G |
| 16 | 64827-MEL-D00ZA | STRIPE, L. UNDER COWL *TYPE1* | - | 1 | - | - | -------- | -------- | E,ED,EK,F,G,KO |
| | 64827-MEL-D00ZB | STRIPE, L. UNDER COWL *TYPE2* | - | 1 | - | - | -------- | -------- | E,ED,EK,F,G |
| 17 | 64841-MEL-D00ZB | MARK, RR. SEAT COWL *TYPE2* (HONDA) | - | 1 | - | - | -------- | -------- | E,ED,EK,F,G,KO |
| | 64841-MEL-D00ZD | MARK, RR. SEAT COWL *TYPE3* (HONDA) | - | 1 | - | - | -------- | -------- | E,ED,EK,F,G |
| 18 | 64842-MEL-D00ZB | MARK, RR. SEAT COWL *TYPE2* · | - | 2 | - | - | -------- | -------- | E,ED,EK,F,G,KO |
| | 64842-MEL-D00ZD | MARK, RR. SEAT COWL *TYPE3* · | - | 2 | - | - | -------- | -------- | E,ED,EK,F,G |
| 19 | 64851-MEL-D00ZA | MARK, R. TOP SHELTER *TYPE1* | - | 1 | - | - | -------- | -------- | E,ED,EK,F,G,KO |
| | 64851-MEL-D00ZB | MARK, R. TOP SHELTER *TYPE2* | - | 1 | - | - | -------- | -------- | E,ED,EK,F,G |
| 20 | 64852-MEL-D00ZA | MARK, L. TOP SHELTER *TYPE1* | - | 1 | - | - | -------- | -------- | E,ED,EK,F,G,KO |
| | 64852-MEL-D00ZB | MARK, L. TOP SHELTER *TYPE2* | - | 1 | - | - | -------- | -------- | E,ED,EK,F,G |
| 21 | 64853-MEL-D00ZA | STRIPE A, R. TOP SHELTER *TYPE1* | - | 1 | - | - | -------- | -------- | E,ED,EK,F,G,KO |
| | 64853-MEL-D00ZB | STRIPE A, R. TOP SHELTER *TYPE2* | - | 1 | - | - | -------- | -------- | E,ED,EK,F,G |
| 22 | 64854-MEL-D00ZA | STRIPE A, L. TOP SHELTER *TYPE1* | - | 1 | - | - | -------- | -------- | E,ED,EK,F,G,KO |
| | 64854-MEL-D00ZB | STRIPE A, L. TOP SHELTER *TYPE2* | - | 1 | - | - | -------- | -------- | E,ED,EK,F,G |
| 23 | 64857-MEL-D00ZA | STRIPE B, R. TOP SHELTER *TYPE1* | - | 1 | - | - | -------- | -------- | E,ED,EK,F,G,KO |
| | 64857-MEL-D00ZB | STRIPE B, R. TOP SHELTER *TYPE2* | - | 1 | - | - | -------- | -------- | E,ED,EK,F,G |
| 24 | 64858-MEL-D00ZA | STRIPE B, L. TOP SHELTER *TYPE1* | - | 1 | - | - | -------- | -------- | E,ED,EK,F,G,KO |
| | 64858-MEL-D00ZB | STRIPE B, L. TOP SHELTER *TYPE2* | - | 1 | - | - | -------- | -------- | E,ED,EK,F,G |

# F-40-3 STRIPE/MARK(4)

2-C 1

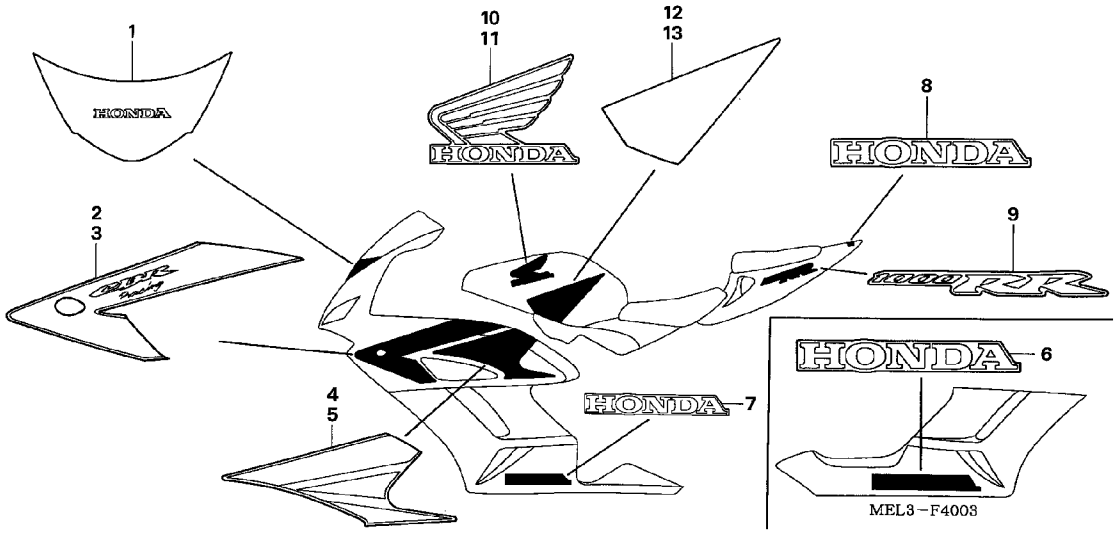


| Ref. No. | L.O.N. | (Relative ref. Number) Description | F.R.T. |
|---|---|---|---|
| | | NO INFORMATION ..... | |

| Ref. No. | Part No. | Description | Reqd. QTY CBR1000RR 4 | 5 | 6 | 7 | Serial No. | | Parts catalogue code |
|---|---|---|---|---|---|---|---|---|---|
| 1 | 64805-MEL-000ZA | STRIPE, WINDSCREEN *TYPE1* -- | - | 1 | - | - | -------- | -------- | BR,MX,U |
| 2 | 64813-MEL-A00ZA | STRIPE A, R. MIDDLE COWL *TYPE1* | - | 1 | - | - | -------- | -------- | BR,MX,U |
| | 64813-MEL-A00ZB | STRIPE A, R. MIDDLE COWL *TYPE2* | - | 1 | - | - | -------- | -------- | BR,MX,U |
| | 64813-MEL-A00ZC | STRIPE A, R. MIDDLE COWL *TYPE3* | - | 1 | - | - | -------- | -------- | BR,MX,U |
| 3 | 64814-MEL-A00ZA | STRIPE A, L. MIDDLE COWL *TYPE1* | - | 1 | - | - | -------- | -------- | BR,MX,U |
| | 64814-MEL-A00ZB | STRIPE A, L. MIDDLE COWL *TYPE2* | - | 1 | - | - | -------- | -------- | BR,MX,U |
| | 64814-MEL-A00ZC | STRIPE A, L. MIDDLE COWL *TYPE3* | - | 1 | - | - | -------- | -------- | BR,MX,U |
| 4 | 64817-MEL-A00ZA | STRIPE C, R. MIDDLE COWL *TYPE1* | - | 1 | - | - | -------- | -------- | BR,MX,U |
| | 64817-MEL-A00ZB | STRIPE C, R. MIDDLE COWL *TYPE2* | - | 1 | - | - | -------- | -------- | BR,MX,U |
| | 64817-MEL-670ZA | STRIPE C, R. MIDDLE COWL *TYPE1* | - | 1 | - | - | -------- | -------- | BR,MX,U |
| 5 | 64818-MEL-A00ZA | STRIPE C, L. MIDDLE COWL *TYPE1* | - | 1 | - | - | -------- | -------- | BR,MX,U |
| | 64818-MEL-A00ZB | STRIPE C, L. MIDDLE COWL *TYPE2* | - | 1 | - | - | -------- | -------- | BR,MX,U |
| | 64818-MEL-670ZA | STRIPE C, L. MIDDLE COWL *TYPE1* | - | 1 | - | - | -------- | -------- | BR,MX,U |
| 6 | 64819-MEL-D00ZA | MARK, UNDER COWL *TYPE3* (HONDA) | - | 1 | - | - | -------- | -------- | BR,MX,U |

# STRIPE/MARK(4)



| Ref. No. | Part No. | Description | Reqd. QTY CBR1000RR 4 | 5 | 6 | 7 | Serial No. | | Parts catalogue code |
|---|---|---|---|---|---|---|---|---|---|
| (6) | 64819-MEL-D00ZB | MARK, UNDER COWL *TYPE4* (HONDA) | - | 1 | - | - | -------- | -------- | BR,MX,U |
| | 64819-MEL-D00ZC | MARK, UNDER COWL *TYPE5* (HONDA) | - | 1 | - | - | -------- | -------- | BR,MX,U |
| 7 | 64825-MEL-D00ZA | MARK, UNDER COWL *TYPE3* (HONDA) | - | 1 | - | - | -------- | -------- | BR,MX,U |
| | 64825-MEL-D00ZB | MARK, UNDER COWL *TYPE4* (HONDA) | - | 1 | - | - | -------- | -------- | BR,MX,U |
| | 64825-MEL-D00ZC | MARK, UNDER COWL *TYPE5* (HONDA) | - | 1 | - | - | -------- | -------- | BR,MX,U |
| 8 | 64841-MEL-D00ZA | MARK, RR. SEAT COWL *TYPE1* (HONDA) | - | 1 | - | - | -------- | -------- | BR,MX,U |
| | 64841-MEL-D00ZB | MARK, RR. SEAT COWL *TYPE2* (HONDA) | - | 1 | - | - | -------- | -------- | BR,MX,U |
| | 64841-MEL-D00ZC | MARK, RR. SEAT COWL *TYPE4* (HONDA) | - | 1 | - | - | -------- | -------- | BR,MX,U |
| 9 | 64842-MEL-D00ZA | MARK, RR. SEAT COWL *TYPE1* · | - | 2 | - | - | -------- | -------- | BR,MX,U |
| | 64842-MEL-D00ZB | MARK, RR. SEAT COWL *TYPE2* · | - | 2 | - | - | -------- | -------- | BR,MX,U |
| | 64842-MEL-D00ZC | MARK, RR. SEAT COWL *TYPE4* · | - | 2 | - | - | -------- | -------- | BR,MX,U |
| 10 | 64851-MEL-A00ZA | MARK, R. TOP SHELTER *TYPE1* | - | 1 | - | - | -------- | -------- | BR,MX,U |
| | 64851-MEL-A00ZB | MARK, R. TOP SHELTER *TYPE2* | - | 1 | - | - | -------- | -------- | BR,MX,U |
| | 64851-MEL-000ZA | MARK, R. TOP SHELTER *TYPE1* | - | 1 | - | - | -------- | -------- | BR,MX,U |
| 11 | 64852-MEL-A00ZA | MARK, L. TOP SHELTER *TYPE1* | - | 1 | - | - | -------- | -------- | BR,MX,U |
| | 64852-MEL-A00ZB | MARK, L. TOP SHELTER *TYPE2* | - | 1 | - | - | -------- | -------- | BR,MX,U |
| | 64852-MEL-000ZA | MARK, L. TOP SHELTER *TYPE1* | - | 1 | - | - | -------- | -------- | BR,MX,U |
| 12 | 64853-MEL-A00ZA | STRIPE, R. TOP SHELTER *TYPE1* | - | 1 | - | - | -------- | -------- | BR,MX,U |
| | 64853-MEL-000ZB | STRIPE, R. TOP SHELTER *TYPE2* | - | 1 | - | - | -------- | -------- | BR,MX,U |
| 13 | 64854-MEL-A00ZA | STRIPE, L. TOP SHELTER *TYPE1* | - | 1 | - | - | -------- | -------- | BR,MX,U |
| | 64854-MEL-000ZB | STRIPE, L. TOP SHELTER *TYPE2* | - | 1 | - | - | -------- | -------- | BR,MX,U |

# STRIPE/MARK(5)



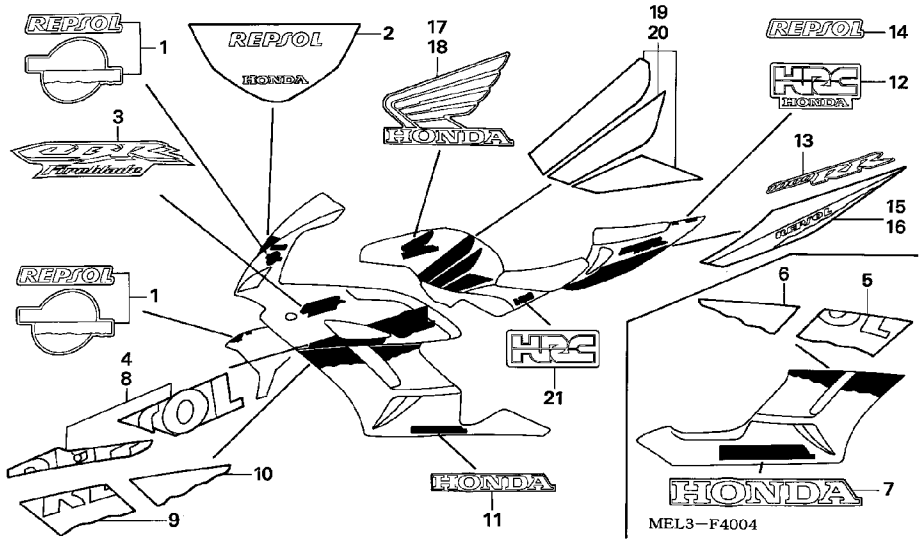


| Ref. No. | L.O.N. | (Relative ref. Number) Description | F.R.T. |
|---|---|---|---|
| | | NO INFORMATION ..... | |

| Ref. No. | Part No. | Description | Reqd. QTY CBR1000RR 4 | 5 | 6 | 7 | Serial No. | | Parts catalogue code |
|---|---|---|---|---|---|---|---|---|---|
| 1 | 61111-MEL-D10ZA | MARK, FR. FENDER *TYPE1* (REPSOL) | - | 3 | - | - | -------- | -------- | 2ED,2F,2G,2K0,2U,3E,4EK |
| 2 | 64805-MEL-D10ZA | STRIPE, WINDSCREEN *TYPE1* ·· | - | 1 | - | - | -------- | -------- | 2ED,2F,2G,2K0,2U,3E,4EK |
| 3 | 64811-MEL-D10ZA | MARK, MIDDLE COWL *TYPE1* ··· | - | 2 | - | - | -------- | -------- | 2ED,2F,2G,2K0,2U,3E,4EK |
| 4 | 64812-MEL-D10ZA | MARK, R. MIDDLE COWL *TYPE1* | - | 1 | - | - | -------- | -------- | 2ED,2F,2G,2K0,2U,3E,4EK |
| 5 | 64813-MEL-D10ZA | STRIPE A, R. UNDER COWL *TYPE1* | - | 1 | - | - | -------- | -------- | 2ED,2F,2G,2K0,2U,3E,4EK |
| 6 | 64814-MEL-D10ZA | STRIPE B, R. UNDER COWL *TYPE1* | - | 1 | - | - | -------- | -------- | 2ED,2F,2G,2K0,2U,3E,4EK |
| 7 | 64819-MEL-D10ZA | MARK, UNDER COWL *TYPE1* (HONDA) | - | 1 | - | - | -------- | -------- | 2ED,2F,2G,2K0,2U,3E,4EK |
| 8 | 64822-MEL-D10ZA | MARK, L. MIDDLE COWL *TYPE1* | - | 1 | - | - | -------- | -------- | 2ED,2F,2G,2K0,2U,3E,4EK |
| 9 | 64823-MEL-D10ZA | STRIPE A, L. UNDER COWL *TYPE1* | - | 1 | - | - | -------- | -------- | 2ED,2F,2G,2K0,2U,3E,4EK |
| 10 | 64824-MEL-D10ZA | STRIPE B, L. UNDER COWL *TYPE1* | - | 1 | - | - | -------- | -------- | 2ED,2F,2G,2K0,2U,3E,4EK |
| 11 | 64825-MEL-D10ZA | MARK, L. UNDER COWL *TYPE1* (HONDA) | - | 1 | - | - | -------- | -------- | 2ED,2F,2G,2K0,2U,3E,4EK |
| 12 | 64841-MEL-D10ZA | MARK, RR. SEAT COWL *TYPE1* (HRC) | - | 1 | - | - | -------- | -------- | 2ED,2F,2G,2K0,2U,3E,4EK |
| 13 | 64842-MEL-D10ZA | MARK, RR. SEAT COWL *TYPE1* · | - | 2 | - | - | -------- | -------- | 2ED,2F,2G,2K0,2U,3E,4EK |
| 14 | 64843-MEL-D10ZA | MARK, RR. SEAT COWL *TYPE1* (REPSOL) | - | 1 | - | - | -------- | -------- | 2ED,2F,2G,2K0,2U,3E,4EK |
| 15 | 64844-MEL-D10ZA | STRIPE, R. RR. SEAT COWL *TYPE1* | - | 1 | - | - | -------- | -------- | 2ED,2F,2G,2K0,2U,3E,4EK |

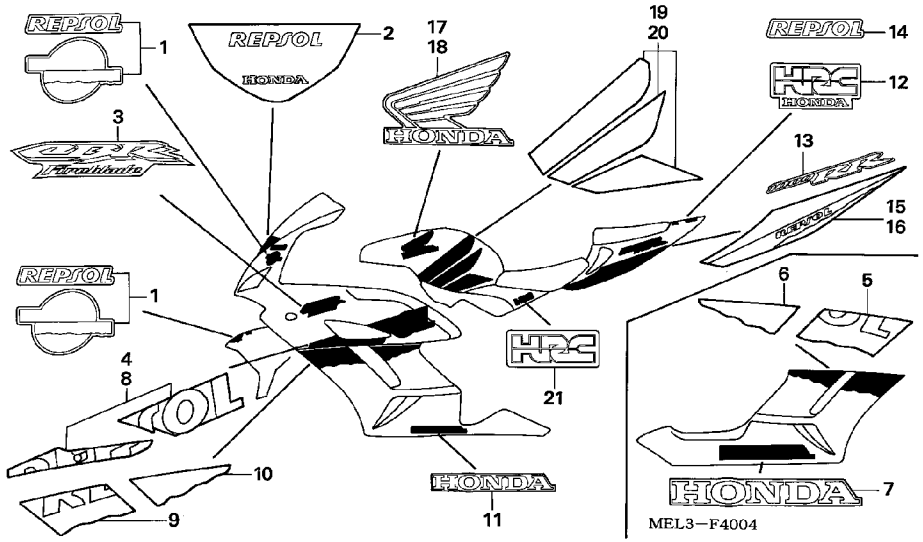


| Ref. No. | Part No. | Description | Reqd. QTY CBR1000RR 4 | 5 | 6 | 7 | Serial No. | | Parts catalogue code |
|---|---|---|---|---|---|---|---|---|---|
| 16 | 64845-MEL-D10ZA | STRIPE, L. RR. SEAT COWL *TYPE1* | - | 1 | - | - | -------- | -------- | 2ED,2F,2G,2K0,2U,3E,4EK |
| 17 | 64851-MEL-D10ZA | MARK, R. TOP SHELTER *TYPE1* | - | 1 | - | - | -------- | -------- | 2ED,2F,2G,2K0,2U,3E,4EK |
| 18 | 64852-MEL-D10ZA | MARK, L. TOP SHELTER *TYPE1* | - | 1 | - | - | -------- | -------- | 2ED,2F,2G,2K0,2U,3E,4EK |
| 19 | 64857-MEL-D10ZA | STRIPE, R. TOP SHELTER *TYPE1* | - | 1 | - | - | -------- | -------- | 2ED,2F,2G,2K0,2U,3E,4EK |
| 20 | 64858-MEL-D10ZA | STRIPE, L. TOP SHELTER *TYPE1* | - | 1 | - | - | -------- | -------- | 2ED,2F,2G,2K0,2U,3E,4EK |
| 21 | 64859-MEL-D10ZA | MARK, TOP SHELTER *TYPE1*(HRC) | - | 2 | - | - | -------- | -------- | 2ED,2F,2G,2K0,2U,3E,4EK |

# STRIPE/MARK(6)



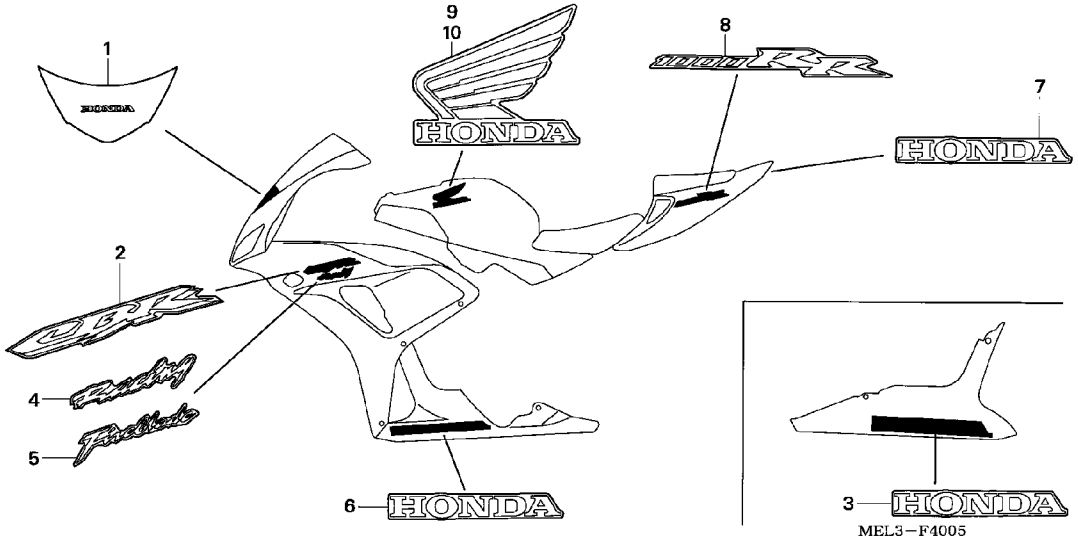


| Ref. No. | L.O.N. | (Relative ref. Number) Description | F.R.T. |
|---|---|---|---|
| | | NO INFORMATION ..... | |



| Ref. No. | Part No. | Description | Reqd. QTY CBR1000RR 4 | 5 | 6 | 7 | Serial No. | | Parts catalogue code |
|---|---|---|---|---|---|---|---|---|---|
| 1 | 64805-MEL-000ZA | STRIPE, WINDSCREEN *TYPE1* -- | - | - | 1 | - | | | |
| | | | - | - | - | 1 | -------- | -------- | MX,U |
| 2 | 64811-MEL-D20ZA | MARK, MIDDLE COWL *TYPE1* --- | - | - | 2 | - | -------- | -------- | E,ED,EK,F,KO,MX,U |
| | 64811-MEL-A30ZA | ..... | - | - | - | 2 | -------- | -------- | MX,U |
| 3 | 64819-MEL-D20ZA | MARK, UNDER COWL *TYPE1* (HONDA) | - | - | 1 | - | -------- | -------- | E,ED,EK,F,KO,MX,U |
| | 64819-MEL-D20ZB | MARK, UNDER COWL *TYPE2* (HONDA) | - | - | 1 | 1 | -------- | -------- | MX,U |
| 4 | 64820-MEL-A20ZA | MARK *TYPE1*(RACING) ..... | - | - | 2 | - | -------- | -------- | MX,U |
| | 64820-MEL-A30ZA | ..... | - | - | - | 2 | -------- | -------- | MX,U |
| 5 | 64820-MEL-D20ZA | MARK *TYPE1*(FIREBLADE) ----- | - | - | 2 | - | -------- | -------- | E,ED,EK,F,KO |
| 6 | 64825-MEL-D20ZA | MARK, UNDER COWL *TYPE1* (HONDA) | - | - | 1 | - | -------- | -------- | E,ED,EK,F,KO,MX,U |
| | 64825-MEL-D20ZB | MARK, UNDER COWL *TYPE2* (HONDA) | - | - | 1 | 1 | -------- | -------- | MX,U |
| 7 | 64841-MEL-D20ZA | MARK, RR. SEAT COWL *TYPE1* (HONDA) | - | - | 1 | - | -------- | -------- | E,ED,EK,F,KO,MX,U |
| | 64841-MEL-D30ZC | MARK, RR. SEAT COWL *TYPE3* (HONDA) | - | - | - | 1 | -------- | -------- | MX,U |
| 8 | 64842-MEL-D20ZA | MARK, RR. SEAT COWL *TYPE1* - | - | - | 2 | - | -------- | -------- | E,ED,EK,F,KO,MX,U |
| | 64842-MEL-D30ZC | MARK, RR. SEAT COWL *TYPE4* - | - | - | - | 2 | -------- | -------- | MX,U |
| 9 | 64855-MEL-D20ZA | MARK, R. TOP SHELTER *TYPE1* | - | - | 1 | - | -------- | -------- | E,ED,EK,F,KO,MX,U |
| | 64855-MEL-A30ZA | ..... | - | - | - | 1 | -------- | -------- | MX,U |
| 10 | 64856-MEL-D20ZA | MARK, L. TOP SHELTER *TYPE1* | - | - | 1 | - | -------- | -------- | E,ED,EK,F,KO,MX,U |
| | 64856-MEL-A30ZA | ..... | - | - | - | 1 | -------- | -------- | MX,U |

# STRIPE/MARK(7)



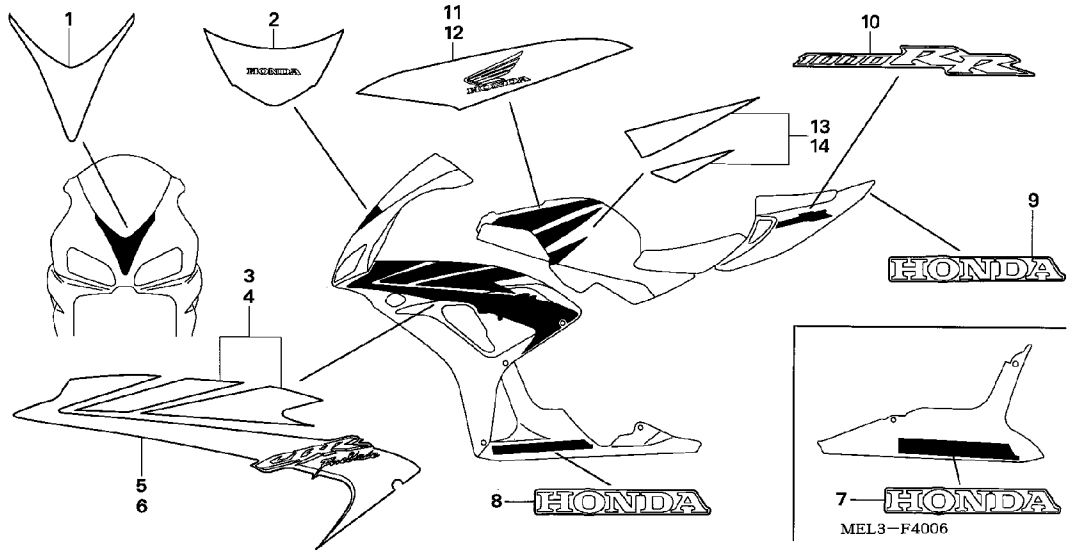


| Ref. No. | L.O.N. | (Relative ref. Number) Description | F.R.T. |
|---|---|---|---|
| | | NO INFORMATION ..... | |

| Ref. No. | Part No. | Description | Reqd. QTY CBR1000RR 4 | 5 | 6 | 7 | Serial No. | | Parts catalogue code |
|---|---|---|---|---|---|---|---|---|---|
| 1 | 64101-MEL-D20ZA | STRIPE, UPPER COWL *TYPE1* .. | - | - | 1 | - | -------- | -------- | BR,E,ED,EK,F,KO |
| | 64101-MEL-D20ZB | STRIPE, UPPER COWL *TYPE2* .. | - | - | 1 | - | -------- | -------- | BR,E,ED,EK,F |
| | 64101-MEL-D30ZA | STRIPE, UPPER COWL *TYPE1* .. | - | - | - | 1 | -------- | -------- | E,ED,EK,F,KO |
| | 64101-MEL-D30ZB | STRIPE, UPPER COWL *TYPE2* .. | - | - | - | 1 | -------- | -------- | E,ED,EK,F,KO |
| 2 | 64805-MEL-000ZA | STRIPE, WINDSCREEN *TYPE1* .. | - | - | 1 | 1 | -------- | -------- | E,ED,EK,F,KO |
| | | | - | - | 1 | - | -------- | -------- | BR |
| 3 | 64813-MEL-D20ZA | STRIPE A, R. MIDDLE COWL *TYPE1* | - | - | 1 | 1 | -------- | -------- | E,ED,EK,F,KO |
| | | | - | - | 1 | - | -------- | -------- | BR |
| | 64813-MEL-D20ZB | STRIPE A, R. MIDDLE COWL *TYPE2* | - | - | 1 | - | -------- | -------- | BR,E,ED,EK,F |
| | 64813-MEL-D30ZA | STRIPE A, R. MIDDLE COWL *TYPE1* | - | - | - | 1 | -------- | -------- | E,ED,EK,F,KO |
| 4 | 64814-MEL-D20ZA | STRIPE A, L. MIDDLE COWL *TYPE1* | - | - | 1 | 1 | -------- | -------- | E,ED,EK,F,KO |
| | | | - | - | 1 | - | -------- | -------- | BR |
| | 64814-MEL-D20ZB | STRIPE A, L. MIDDLE COWL *TYPE2* | - | - | 1 | - | -------- | -------- | BR,E,ED,EK,F |
| | 64814-MEL-D30ZA | STRIPE A, L. MIDDLE COWL *TYPE1* | - | - | - | 1 | -------- | -------- | E,ED,EK,F,KO |
| 5 | 64815-MEL-D20ZA | STRIPE B, R. MIDDLE COWL *TYPE1* | - | - | 1 | - | -------- | -------- | BR,E,ED,EK,F,KO |
| | 64817-MEL-D20ZA | ..... | - | - | 1 | - | -------- | -------- | BR,E,ED,EK,F |
| | 64815-MEL-D30ZA | ..... | - | - | - | 1 | -------- | -------- | E,ED,EK,F,KO |
| | 64815-MEL-D30ZB | STRIPE B, R. MIDDLE COWL *TYPE2* | - | - | - | 1 | -------- | -------- | E,ED,EK,F,KO |
| 6 | 64816-MEL-D20ZA | STRIPE B, L. MIDDLE COWL *TYPE1* | - | - | 1 | - | -------- | -------- | BR,E,ED,EK,F,KO |

# STRIPE/MARK(7)



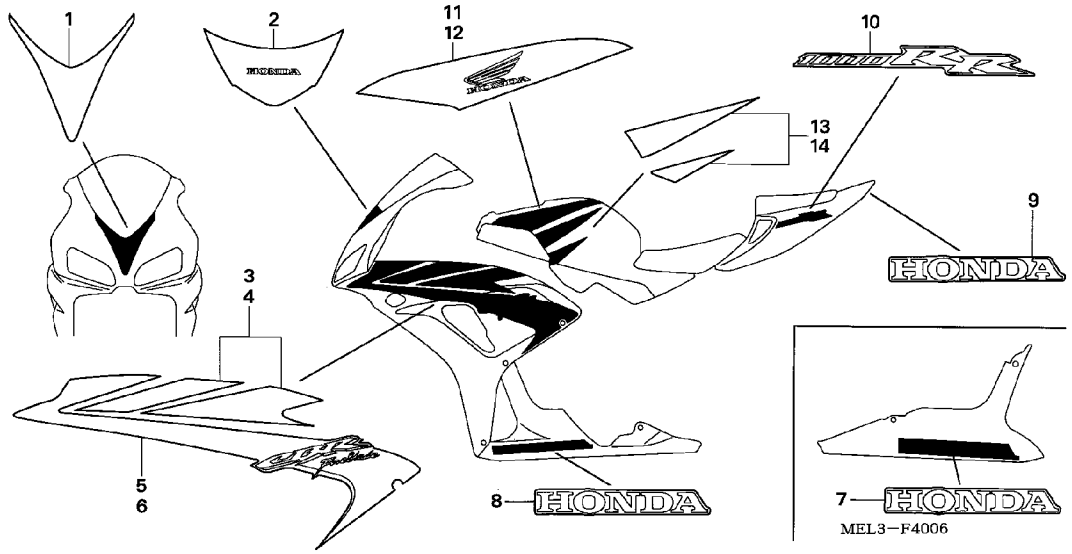




| Ref. No. | Part No. | Description | Reqd. QTY CBR1000RR 4 | 5 | 6 | 7 | Serial No. | | Parts catalogue code |
|---|---|---|---|---|---|---|---|---|---|
| (6) | 64818-MEL-D20ZA | STRIPE B, L. MIDDLE COWL *TYPE1* | - | - | 1 | - | -------- | -------- | BR,E,ED,EK,F |
| | 64816-MEL-D30ZA | ..... | - | - | - | 1 | -------- | -------- | E,ED,EK,F,KO |
| | 64816-MEL-D30ZB | STRIPE B, L. MIDDLE COWL *TYPE2* | - | - | - | 1 | -------- | -------- | E,ED,EK,F,KO |
| 7 | 64819-MEL-D20ZB | MARK, UNDER COWL *TYPE2* (HONDA) | - | - | 1 | 1 | -------- | -------- | E,ED,EK,F,KO |
| | | | - | - | 1 | - | -------- | -------- | BR |
| 8 | 64825-MEL-D20ZB | MARK, UNDER COWL *TYPE2* (HONDA) | - | - | 1 | 1 | -------- | -------- | E,ED,EK,F,KO |
| | | | - | - | 1 | - | -------- | -------- | BR |
| 9 | 64841-MEL-D20ZB | MARK, RR. SEAT COWL *TYPE2* (HONDA) | - | - | 1 | 1 | -------- | -------- | E,ED,EK,F,KO |
| | | | - | - | 1 | - | -------- | -------- | BR |
| | 64841-MEL-D20ZC | MARK, RR. SEAT COWL *TYPE3* (HONDA) | - | - | 1 | - | -------- | -------- | BR,E,ED,EK,F |
| | 64841-MEL-D30ZA | MARK, RR. SEAT COWL *TYPE1* (HONDA) | - | - | - | 1 | -------- | -------- | E,ED,EK,F,KO |
| 10 | 64842-MEL-D20ZB | MARK, RR. SEAT COWL *TYPE2* · | - | - | 2 | 2 | -------- | -------- | E,ED,EK,F,KO |
| | | | - | - | 2 | - | -------- | -------- | BR |
| | 64842-MEL-D20ZC | MARK, RR. SEAT COWL *TYPE3* · | - | - | 2 | - | -------- | -------- | BR,E,ED,EK,F |
| | 64842-MEL-D30ZD | MARK, RR. SEAT COWL *TYPE1* · | - | - | - | 2 | -------- | -------- | E,ED,EK,F,KO |
| 11 | 64851-MEL-D20ZA | STRIPE A, R. TOP SHELTER *TYPE1* | - | - | 1 | 1 | -------- | -------- | E,ED,EK,F,KO |
| | | | - | - | 1 | - | -------- | -------- | BR |
| | 64851-MEL-D20ZB | STRIPE A, R. TOP SHELTER *TYPE2* | - | - | 1 | - | -------- | -------- | BR,E,ED,EK,F |

# STRIPE/MARK(7)



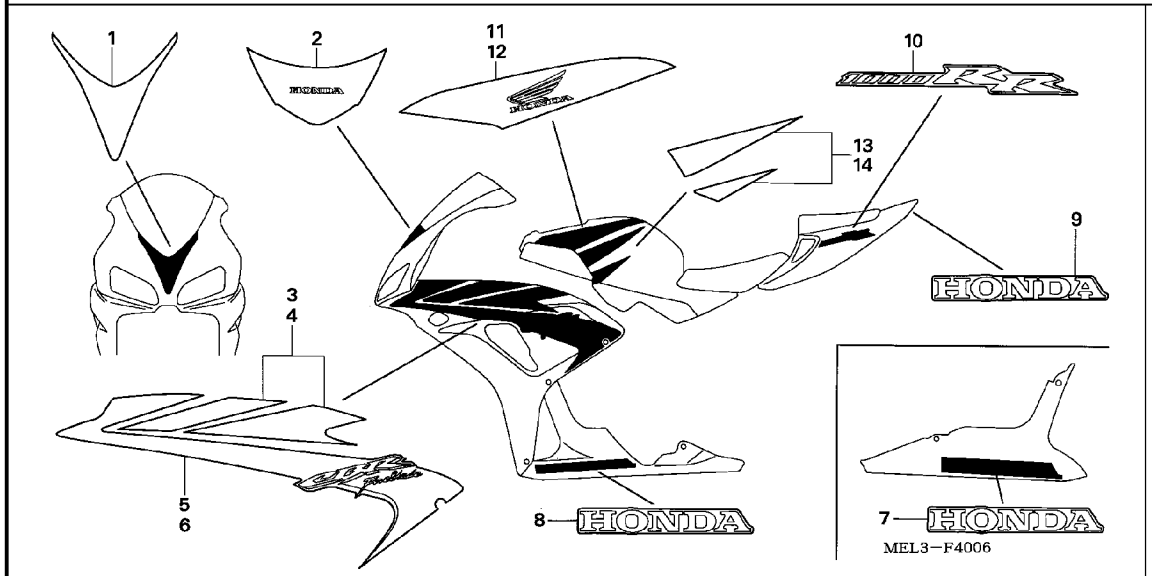


| Ref. No. | Part No. | Description | Reqd. QTY CBR1000RR 4 | 5 | 6 | 7 | Serial No. | | Parts catalogue code |
|---|---|---|---|---|---|---|---|---|---|
| 11) | 64851-MEL-D30ZA | STRIPE A, R. TOP SHELTER *TYPE1* | - | - | - | 1 | -------- | -------- | E,ED,EK,F,KO |
| 12 | 64852-MEL-D20ZA | STRIPE A, L. TOP SHELTER *TYPE1* | - | - | 1 | 1 | -------- | -------- | E,ED,EK,F,KO |
| | | | - | - | 1 | - | -------- | -------- | BR |
| | 64852-MEL-D20ZB | STRIPE A, L. TOP SHELTER *TYPE2* | - | - | 1 | - | -------- | -------- | BR,E,ED,EK,F |
| | 64852-MEL-D30ZA | STRIPE A, L. TOP SHELTER *TYPE1* | - | - | - | 1 | -------- | -------- | E,ED,EK,F,KO |
| 13 | 64853-MEL-D20ZA | STRIPE B, R. TOP SHELTER *TYPE1* | - | - | 1 | 1 | -------- | -------- | E,ED,EK,F,KO |
| | | | - | - | 1 | - | -------- | -------- | BR |
| | 64853-MEL-D20ZB | STRIPE B, R. TOP SHELTER *TYPE2* | - | - | 1 | - | -------- | -------- | BR,E,ED,EK,F |
| | 64853-MEL-D30ZA | STRIPE B, R. TOP SHELTER *TYPE1* | - | - | - | 1 | -------- | -------- | E,ED,EK,F,KO |
| 14 | 64854-MEL-D20ZA | STRIPE B, L. TOP SHELTER *TYPE1* | - | - | 1 | 1 | -------- | -------- | E,ED,EK,F,KO |
| | | | - | - | 1 | - | -------- | -------- | BR |
| | 64854-MEL-D20ZB | STRIPE B, L. TOP SHELTER *TYPE2* | - | - | 1 | - | -------- | -------- | BR,E,ED,EK,F |
| | 64854-MEL-D30ZA | STRIPE B, L. TOP SHELTER *TYPE1* | - | - | - | 1 | -------- | -------- | E,ED,EK,F,KO |

# STRIPE/MARK(8)



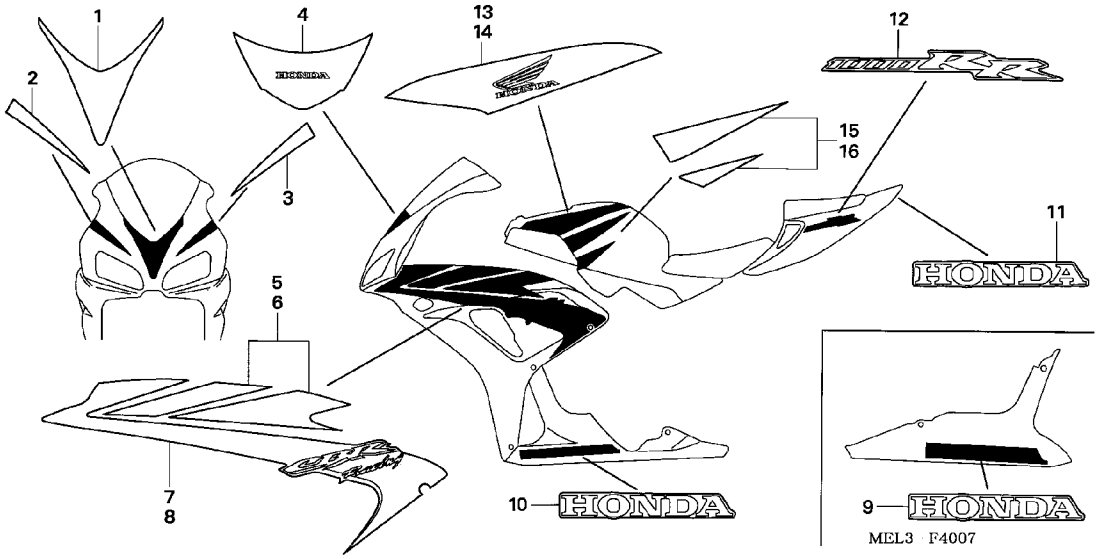


| Ref. No. | L.O.N. | (Relative ref. Number) Description | F.R.T. |
|---|---|---|---|
| | | NO INFORMATION ..... | |

3

| Ref. No. | Part No. | Description | Reqd. QTY CBR1000RR 4 | 5 | 6 | 7 | Serial No. | | Parts catalogue code |
|---|---|---|---|---|---|---|---|---|---|
| 1 | 64101-MEL-A20ZA | STRIPE, UPPER COWL *TYPE1* -- | - | - | 1 | - | -------- | -------- | MX,U |
| | 64101-MEL-D20ZA | ..... | - | - | 1 | - | -------- | -------- | MX,U |
| | 64101-MEL-D20ZB | STRIPE, UPPER COWL *TYPE2* -- | - | - | 1 | - | -------- | -------- | MX,U |
| | 64101-MEL-D30ZA | STRIPE, UPPER COWL *TYPE1* -- | - | - | - | 1 | -------- | -------- | BR,MX,U |
| | 64101-MEL-D30ZB | STRIPE, UPPER COWL *TYPE2* -- | - | - | - | 1 | -------- | -------- | BR,MX,U |
| 2 | 64102-MEL-A20ZA | STRIPE, R. UPPER COWL *TYPE1* | - | - | 1 | - | -------- | -------- | MX,U |
| | 64102-MEL-A20ZB | STRIPE, R. UPPER COWL *TYPE2* | - | - | 1 | - | -------- | -------- | MX,U |
| | 64102-MEL-A20ZC | STRIPE, R. UPPER COWL *TYPE3* | - | - | 1 | - | -------- | -------- | MX,U |
| | 64102-MEL-A30ZA | STRIPE, R. UPPER COWL *TYPE1* | - | - | - | 1 | -------- | -------- | BR,MX,U |
| | 64102-MEL-A30ZB | STRIPE, R. UPPER COWL *TYPE2* | - | - | - | 1 | -------- | -------- | BR,MX,U |
| 3 | 64103-MEL-A20ZA | STRIPE, L. UPPER COWL *TYPE1* | - | - | 1 | - | -------- | -------- | MX,U |
| | 64103-MEL-A20ZB | STRIPE, L. UPPER COWL *TYPE2* | - | - | 1 | - | -------- | -------- | MX,U |
| | 64103-MEL-A20ZC | STRIPE, L. UPPER COWL *TYPE3* | - | - | 1 | - | -------- | -------- | MX,U |
| | 64103-MEL-A30ZA | STRIPE, L. UPPER COWL *TYPE1* | - | - | - | 1 | -------- | -------- | BR,MX,U |
| | 64103-MEL-A30ZB | STRIPE, L. UPPER COWL *TYPE2* | - | - | - | 1 | -------- | -------- | BR,MX,U |
| 4 | 64805-MEL-000ZA | STRIPE, WINDSCREEN *TYPE1* -- | - | - | 1 | 1 | -------- | -------- | MX,U |
| | | | - | - | - | 1 | -------- | -------- | BR |
| 5 | 64813-MEL-A20ZA | STRIPE A, R. MIDDLE COWL *TYPE1* | - | - | 1 | - | -------- | -------- | MX,U |
| | 64813-MEL-D20ZA | ..... | - | - | 1 | 1 | -------- | -------- | MX,U |
| | | | - | - | - | 1 | -------- | -------- | BR |
| | 64813-MEL-D20ZB | STRIPE A, R. MIDDLE COWL *TYPE2* | - | - | 1 | - | -------- | -------- | MX,U |
| | 64813-MEL-D30ZA | STRIPE A, R. MIDDLE COWL *TYPE1* | - | - | - | 1 | -------- | -------- | BR,MX,U |
| 6 | 64814-MEL-A20ZA | STRIPE A, L. MIDDLE COWL *TYPE1* | - | - | 1 | - | -------- | -------- | MX,U |

# STRIPE/MARK(8)



| Ref. No. | Part No. | Description | Reqd. QTY CBR1000RR 4 | 5 | 6 | 7 | Serial No. | | Parts catalogue code |
|---|---|---|---|---|---|---|---|---|---|
| (6) | 64814-MEL-D20ZA | STRIPE A, L. MIDDLE COWL *TYPE1* | - | - | 1 | 1 | -------- | -------- | MX,U |
| | | | - | - | - | 1 | -------- | -------- | BR |
| | 64814-MEL-D20ZB | STRIPE A, L. MIDDLE COWL *TYPE2* | - | - | 1 | - | -------- | -------- | MX,U |
| | 64814-MEL-D30ZA | STRIPE A, L. MIDDLE COWL *TYPE1* | - | - | - | 1 | -------- | -------- | BR,MX,U |
| 7 | 64815-MEL-A20ZA | STRIPE B, R. MIDDLE COWL *TYPE1* | - | - | 1 | - | -------- | -------- | MX,U |
| | 64817-MEL-A20ZA | ..... | - | - | 1 | - | -------- | -------- | MX,U |
| | 64822-MEL-A20ZA | ..... | - | - | 1 | - | -------- | -------- | MX,U |
| | 64815-MEL-A30ZA | ..... | - | - | - | 1 | -------- | -------- | BR,MX,U |
| | 64815-MEL-A30ZB | STRIPE B, R. MIDDLE COWL *TYPE2* | - | - | - | 1 | -------- | -------- | BR,MX,U |
| 8 | 64816-MEL-A20ZA | STRIPE B, L. MIDDLE COWL *TYPE1* | - | - | 1 | - | -------- | -------- | MX,U |
| | 64818-MEL-A20ZA | ..... | - | - | 1 | - | -------- | -------- | MX,U |
| | 64823-MEL-A20ZA | ..... | - | - | 1 | - | -------- | -------- | MX,U |
| | 64816-MEL-A30ZA | ..... | - | - | - | 1 | -------- | -------- | BR,MX,U |
| | 64816-MEL-A30ZB | STRIPE B, L. MIDDLE COWL *TYPE2* | - | - | - | 1 | -------- | -------- | BR,MX,U |
| 9 | 64819-MEL-D20ZA | MARK, UNDER COWL *TYPE1* (HONDA) | - | - | 1 | - | -------- | -------- | MX,U |
| | 64819-MEL-D20ZB | MARK, UNDER COWL *TYPE2* (HONDA) | - | - | - | 1 | -------- | -------- | BR,MX,U |
| 10 | 64825-MEL-D20ZA | MARK, UNDER COWL *TYPE1* (HONDA) | - | - | 1 | - | -------- | -------- | MX,U |
| | 64825-MEL-D20ZB | MARK, UNDER COWL *TYPE2* (HONDA) | - | - | - | 1 | -------- | -------- | BR,MX,U |
| 11 | 64841-MEL-D20ZB | MARK, RR. SEAT COWL *TYPE2* (HONDA) | - | - | 1 | 1 | -------- | -------- | MX,U |
| | | | - | - | - | 1 | -------- | -------- | BR |
| | 64841-MEL-D20ZC | MARK, RR. SEAT COWL *TYPE3* (HONDA) | - | - | 1 | - | -------- | -------- | MX,U |
| | 64841-MEL-D20ZD | MARK, RR. SEAT COWL *TYPE4* (HONDA) | - | - | 1 | - | -------- | -------- | MX,U |
| | 64841-MEL-D30ZA | MARK, RR. SEAT COWL *TYPE1* (HONDA) | - | - | - | 1 | -------- | -------- | BR,MX,U |
| 12 | 64842-MEL-D20ZB | MARK, RR. SEAT COWL *TYPE2* · | - | - | 2 | 2 | -------- | -------- | MX,U |
| | | | - | - | - | 2 | -------- | -------- | BR |
| | 64842-MEL-D20ZC | MARK, RR. SEAT COWL *TYPE3* · | - | - | 2 | - | -------- | -------- | MX,U |
| | 64842-MEL-D20ZD | MARK, RR. SEAT COWL *TYPE4* · | - | - | 2 | - | -------- | -------- | MX,U |
| | 64842-MEL-D30ZA | MARK, RR. SEAT COWL *TYPE2* · | - | - | - | 2 | -------- | -------- | BR,MX,U |
| 13 | 64851-MEL-D20ZA | STRIPE A, R. TOP SHELTER *TYPE1* | - | - | 1 | 1 | -------- | -------- | MX,U |
| | | | - | - | - | 1 | -------- | -------- | BR |
| | 64851-MEL-D20ZB | STRIPE A, R. TOP SHELTER *TYPE2* | - | - | 1 | - | -------- | -------- | MX,U |
| | 64851-MEL-D20ZC | STRIPE A, R. TOP SHELTER *TYPE3* | - | - | 1 | - | -------- | -------- | MX,U |
| | 64851-MEL-D30ZA | STRIPE A, R. TOP SHELTER *TYPE1* | - | - | - | 1 | -------- | -------- | BR,MX,U |
| 14 | 64852-MEL-D20ZA | STRIPE A, L. TOP SHELTER *TYPE1* | - | - | 1 | 1 | -------- | -------- | MX,U |
| | | | - | - | - | 1 | -------- | -------- | BR |
| | 64852-MEL-D20ZB | STRIPE A, L. TOP SHELTER *TYPE2* | - | - | 1 | - | -------- | -------- | MX,U |

# STRIPE/MARK(8)



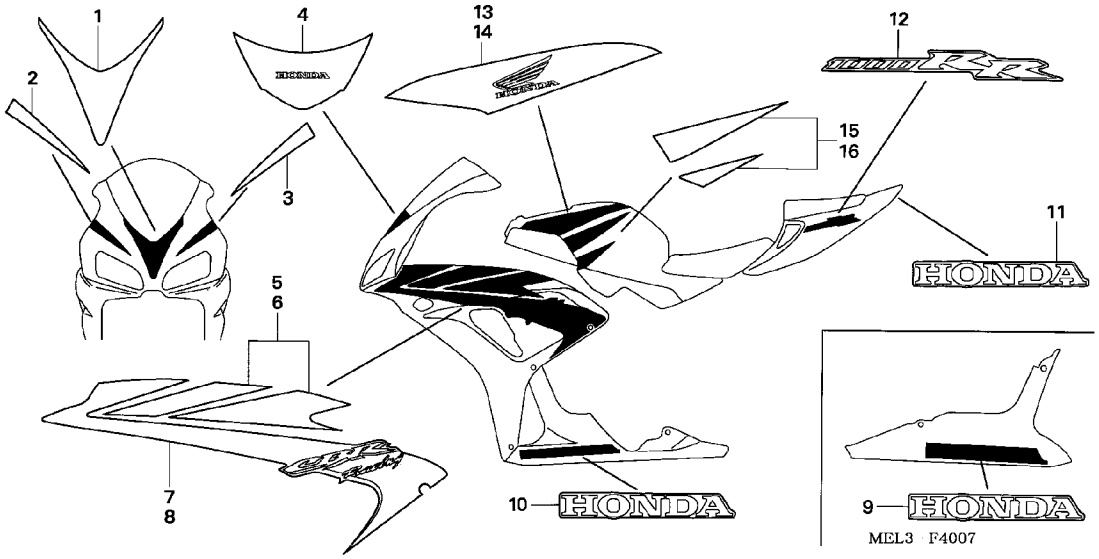


| Ref. No. | Part No. | Description | Reqd. QTY CBR1000RR 4 | 5 | 6 | 7 | Serial No. | | Parts catalogue code |
|---|---|---|---|---|---|---|---|---|---|
| 14) | 64852-MEL-D20ZC | STRIPE A, L. TOP SHELTER *TYPE3* | - | - | 1 | - | -------- | -------- | MX,U |
| | 64852-MEL-D30ZA | STRIPE A, L. TOP SHELTER *TYPE1* | - | - | - | 1 | -------- | -------- | BR,MX,U |
| 15 | 64853-MEL-D20ZA | STRIPE B, R. TOP SHELTER *TYPE1* | - | - | 1 | 1 | -------- | -------- | MX,U |
| | | | - | - | - | 1 | -------- | -------- | BR |
| | 64853-MEL-D20ZB | STRIPE B, R. TOP SHELTER *TYPE2* | - | - | 1 | - | -------- | -------- | MX,U |
| | 64853-MEL-D20ZC | STRIPE B, R. TOP SHELTER *TYPE3* | - | - | 1 | - | -------- | -------- | MX,U |
| | 64853-MEL-D30ZA | STRIPE B, R. TOP SHELTER *TYPE1* | - | - | - | 1 | -------- | -------- | BR,MX,U |
| 16 | 64854-MEL-D20ZA | STRIPE B, L. TOP SHELTER *TYPE1* | - | - | 1 | 1 | -------- | -------- | MX,U |
| | | | - | - | - | 1 | -------- | -------- | BR |
| | 64854-MEL-D20ZB | STRIPE B, L. TOP SHELTER *TYPE2* | - | - | 1 | - | -------- | -------- | MX,U |
| | 64854-MEL-D20ZC | STRIPE B, L. TOP SHELTER *TYPE3* | - | - | 1 | - | -------- | -------- | MX,U |
| | 64854-MEL-D30ZA | STRIPE B, L. TOP SHELTER *TYPE1* | - | - | - | 1 | -------- | -------- | BR,MX,U |

# STRIPE/MARK(9)



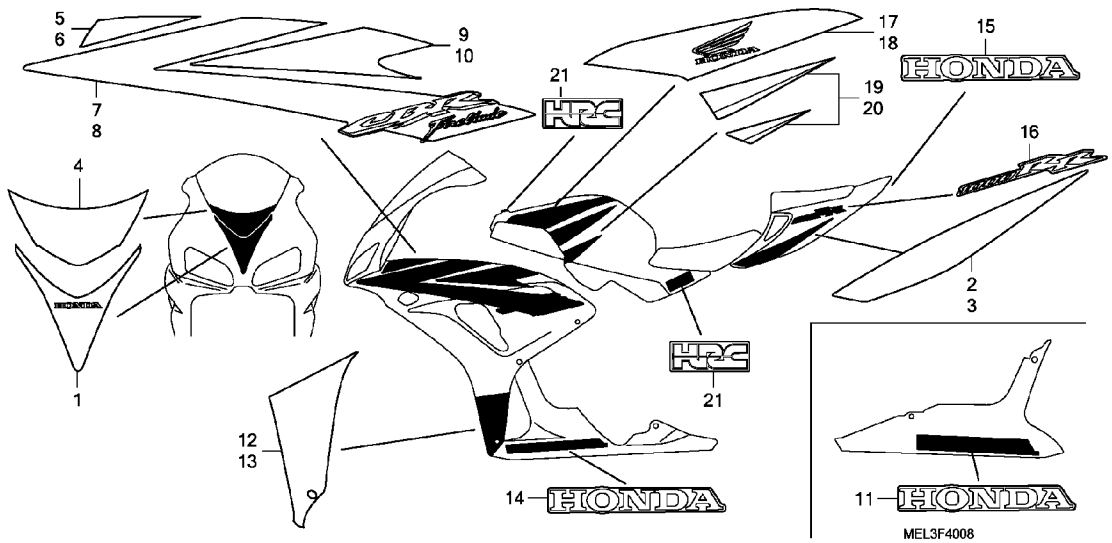


| Ref. No. | L.O.N. | (Relative ref. Number) Description | F.R.T. |
|---|---|---|---|
| | | NO INFORMATION ..... | |

| Ref. No. | Part No. | Description | Reqd. QTY CBR1000RR 4 | 5 | 6 | 7 | Serial No. | | Parts catalogue code |
|---|---|---|---|---|---|---|---|---|---|
| 1 | 64101-MEL-D40ZA | STRIPE, UPPER COWL *TYPE1* ·· | - | - | - | 1 | -------- | -------- | 2ED,2F,3E,4EK |
| 2 | 64243-MEL-D40ZA | STRIPE, R. RR. SEAT COWL *TYPE1* | - | - | - | 1 | -------- | -------- | 2ED,2F,3E,4EK |
| 3 | 64244-MEL-D40ZA | STRIPE, L. RR. SEAT COWL *TYPE1* | - | - | - | 1 | -------- | -------- | 2ED,2F,3E,4EK |
| 4 | 64805-MEL-D40ZA | STRIPE, WINDSCREEN *TYPE1* ·· | - | - | - | 1 | -------- | -------- | 2ED,2F,3E,4EK |
| 5 | 64813-MEL-D40ZA | STRIPE A, R. MIDDLE COWL *TYPE1* | - | - | - | 1 | -------- | -------- | 2ED,2F,3E,4EK |
| 6 | 64814-MEL-D40ZA | STRIPE A, L. MIDDLE COWL *TYPE1* | - | - | - | 1 | -------- | -------- | 2ED,2F,3E,4EK |
| 7 | 64815-MEL-D40ZA | STRIPE B, R. MIDDLE COWL *TYPE1* | - | - | - | 1 | -------- | -------- | 2ED,2F,3E,4EK |
| 8 | 64816-MEL-D40ZA | STRIPE B, L. MIDDLE COWL *TYPE1* | - | - | - | 1 | -------- | -------- | 2ED,2F,3E,4EK |
| 9 | 64817-MEL-D40ZA | STRIPE C, R. MIDDLE COWL *TYPE1* | - | - | - | 1 | -------- | -------- | 2ED,2F,3E,4EK |
| 10 | 64818-MEL-D40ZA | STRIPE C, L. MIDDLE COWL *TYPE1* | - | - | - | 1 | -------- | -------- | 2ED,2F,3E,4EK |
| 11 | 64819-MEL-D30ZB | MARK, UNDER COWL *TYPE2* (HONDA) | - | - | - | 1 | -------- | -------- | 2ED,2F,3E,4EK |
| 12 | 64821-MEL-D40ZA | STRIPE D, R. MIDDLE COWL *TYPE1* | - | - | - | 1 | -------- | -------- | 2ED,2F,3E,4EK |
| 13 | 64822-MEL-D40ZA | STRIPE D, L. MIDDLE COWL *TYPE1* | - | - | - | 1 | -------- | -------- | 2ED,2F,3E,4EK |
| 14 | 64825-MEL-D30ZB | MARK, UNDER COWL *TYPE2* (HONDA) | - | - | - | 1 | -------- | -------- | 2ED,2F,3E,4EK |

# STRIPE/MARK(9)



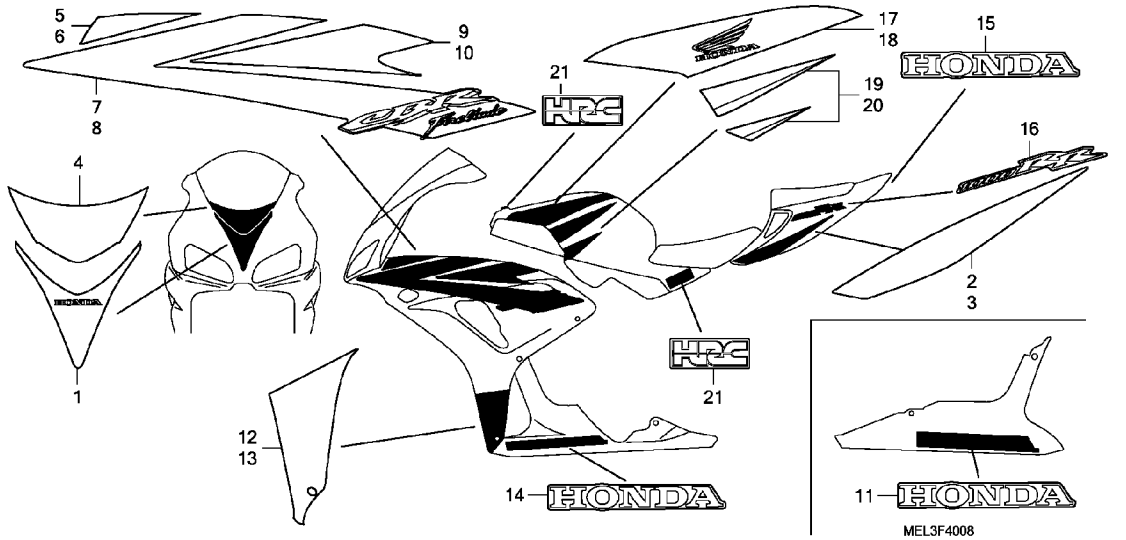


| Ref. No. | Part No. | Description | Reqd. QTY CBR1000RR 4 | 5 | 6 | 7 | Serial No. | | Parts catalogue code |
|---|---|---|---|---|---|---|---|---|---|
| 15 | 64841-MEL-D30ZD | MARK, RR. SEAT COWL *TYPE4* (HONDA) | - | - | - | 1 | -------- | -------- | 2ED,2F,3E,4EK |
| 16 | 64842-MEL-D30ZE | MARK, RR. SEAT COWL *TYPE5* | - | - | - | 2 | -------- | -------- | 2ED,2F,3E,4EK |
| 17 | 64851-MEL-D40ZA | STRIPE A, R. TOP SHELTER *TYPE1* | - | - | - | 1 | -------- | -------- | 2ED,2F,3E,4EK |
| 18 | 64852-MEL-D40ZA | STRIPE A, L. TOP SHELTER *TYPE1* | - | - | - | 1 | -------- | -------- | 2ED,2F,3E,4EK |
| 19 | 64853-MEL-D40ZA | STRIPE B, R. TOP SHELTER *TYPE1* | - | - | - | 1 | -------- | -------- | 2ED,2F,3E,4EK |
| 20 | 64854-MEL-D40ZA | STRIPE B, L. TOP SHELTER *TYPE1* | - | - | - | 1 | -------- | -------- | 2ED,2F,3E,4EK |
| 21 | 64859-MEL-D40ZA | MARK, TOP SHELTER *TYPE1*(HRC) | - | - | - | 3 | -------- | -------- | 2ED,2F,3E,4EK |

# PART NO. INDEX

2-D 1

| Part Number | Address | Page | Ref. |
|---|---|---|---|
| 04000 | | | |
| 04121-MEJ-305 | F16 | 66 | 1 |
| 06000 | | | |
| 06113-MEL-000 | H4 | 86 | 1 |
| 06113-MEL-A20 | H4 | 86 | 1 |
| 06114-MEL-000 | H4 | 86 | 2 |
| 06115-MEL-000 | H5 | 87 | 1 |
| 06116-MEL-000 | H5 | 87 | 2 |
| 06116-MEL-010 | H5 | 87 | 2 |
| 06405-MEL-003 | L12 | 147 | 1 |
| 06405-MEL-005 | L12 | 147 | 1 |
| 06405-MEL-P00 | L12 | 147 | 1 |
| 06405-MEL-P10 | L12 | 147 | 1 |
| 06406-MEL-000 | L12 | 147 | 2 |
| 06406-MEL-D20 | L12 | 147 | 2 |
| 06406-MEL-D40 | L12 | 147 | 2 |
| 06410-MCF-000 | J11 | 114 | 1 |
| 06410-MEL-D20 | J11 | 114 | 1 |
| 06435-MEL-D21 | J10 | 113 | 1 |
| 06451-166-405 | J10 | 113 | 2 |
| 06451-443-405 | J9 | 112 | 1 |
| 06451-MEL-003 | J3 | 106 | 1 |
| 06452-MEL-003 | J3 | 106 | 2 |
| 06455-MEL-003 | J3 | 106 | 3 |
| 06455-MEL-D21 | J3 | 106 | 3 |
| 11000 | | | |
| 11000-MEL-000 | G5 | 71 | 1 |
| 11000-MEL-010 | G5 | 71 | 1 |
| 11000-MEL-D20 | G5 | 71 | 1 |
| 11103-MEL-000 | G5 | 71 | 2 |
| 11104-MEL-000 | G5 | 71 | 3 |
| 11105-MEL-000 | G5 | 71 | 4 |
| 11145-MEL-000 | G5 | 71 | 5 |
| 11146-MEL-000 | G5 | 71 | 6 |
| 11147-MEL-000 | G5 | 71 | 7 |
| 11206-MEL-000 | G5 | 71 | 8 |
| 11210-MEL-000 | G3 | 69 | 1 |
| 11212-MEL-300 | G3 | 69 | 2 |
| 11321-MEL-305 | F14 | 64 | 1 |
| 11321-MEL-D20 | F14 | 64 | 1 |
| 11331-MEL-000 | F9 | 59 | 1 |
| 11331-MEL-D20 | F9 | 59 | 1 |
| 11332-MER-D00 | F9 | 59 | 2 |
| 11332-ML7-000 | F9 | 59 | 2 |
| 11333-MEL-000 | F15 | 65 | 1 |
| 11343-MEL-000 | F16 | 66 | 2 |
| | H5 | 87 | 1 |
| 11350-MEL-000 | F16 | 66 | 3 |
| 11350-MEL-D20 | F16 | 66 | 3 |
| 11352-MEL-300 | F16 | 66 | 4 |
| 11355-MEL-000 | F16 | 66 | 5 |
| 11360-MEE-000 | G5 | 71 | 9 |
| 11370-MEL-000 | F16 | 66 | 6 |
| 11370-MEL-D00 | F16 | 66 | 6 |
| 11370-MEL-D20 | F16 | 66 | 6 |
| 11372-MEL-000 | F16 | 66 | 7 |
| | H5 | 87 | 1 |
| 12000 | | | |
| 12010-MEL-000 | F2 | 52 | 1 |
| 12010-MEL-D20 | F2 | 52 | 1 |
| 12204-MEL-305 | F2 | 52 | 2 |
| 12208-PR3-000 | G5 | 71 | 10 |
| 12209-KT7-013 | F4 | 54 | 1 |
| 12251-MEL-013 | F2 | 52 | 3 |
| | H4 | 86 | 1 |
| 12251-MEL-D21 | F2 | 52 | 3 |
| | H4 | 86 | 1 |
| 12310-MEL-000 | F1 | 51 | 1 |
| 12331-MEL-000 | F1 | 51 | 2 |
| 12332-MEL-000 | F1 | 51 | 3 |
| 12341-MAT-750 | F1 | 51 | 4 |
| 12391-MCJ-000 | F1 | 51 | 5 |
| | H4 | 86 | 1 |
| 12395-MCJ-000 | F2 | 52 | 4 |
| | H4 | 86 | 1 |
| 13000 | | | |
| 13031-MEL-010 | G8 | 74 | 1 |
| 13031-MEL-D20 | G8 | 74 | 1 |
| 13041-MEL-010 | G8 | 74 | 1 |
| 13041-MEL-D20 | G8 | 74 | 1 |
| 13101-MEL-000 | G8 | 74 | 2 |
| 13101-MEL-010 | G8 | 74 | 2 |
| 13103-MEL-000 | G8 | 74 | 2 |
| 13103-MEL-010 | G8 | 74 | 2 |
| 13111-MEL-000 | G8 | 74 | 3 |
| 13112-MEL-000 | G8 | 74 | 4 |
| 13210-MEL-000 | G8 | 74 | 5 |
| 13213-MEL-003 | G8 | 74 | 6 |
| 13214-MEL-003 | G8 | 74 | 7 |
| 13215-MEL-003 | G8 | 74 | 7 |
| 13216-MEL-003 | G8 | 74 | 7 |
| 13217-MEL-003 | G8 | 74 | 7 |
| 13218-MEL-003 | G8 | 74 | 7 |
| 13310-MEL-020 | G8 | 74 | 8 |
| 13310-MEL-D20 | G8 | 74 | 8 |
| 13314-MEL-003 | G8 | 74 | 9 |
| 13315-MEL-003 | G8 | 74 | 9 |
| 13316-MEL-003 | G9 | 75 | 9 |
| 13317-MEL-003 | G9 | 75 | 9 |
| 13318-MEL-003 | G9 | 75 | 9 |
| 13421-MEL-000 | G9 | 75 | 10 |
| 13421-MEL-D20 | G9 | 75 | 10 |
| 13430-MEL-000 | G9 | 75 | 11 |
| 13431-MEL-000 | G9 | 75 | 12 |
| 13435-MAT-000 | G9 | 75 | 13 |
| 13436-MM5-000 | G9 | 75 | 14 |
| 14000 | | | |
| 14110-MEL-000 | F4 | 54 | 2 |
| 14110-MEL-D20 | F4 | 54 | 2 |
| 14210-MEL-000 | F4 | 54 | 3 |
| 14210-MEL-D20 | F4 | 54 | 3 |
| 14312-MEL-000 | G9 | 75 | 15 |
| 14321-MEL-000 | F8 | 58 | 1 |
| 14401-MAS-003 | F8 | 58 | 2 |
| 14401-MAS-013 | F8 | 58 | 2 |
| 14405-MCJ-000 | F4 | 54 | 4 |
| 14405-MEE-000 | F4 | 54 | 4 |
| 14510-MEL-010 | F8 | 58 | 3 |
| 14510-MFA-D00 | F8 | 58 | 3 |
| 14520-MEL-000 | F8 | 58 | 4 |
| 14520-MFA-D01 | F8 | 58 | 4 |
| 14523-MCW-003 | F8 | 58 | 5 |
| | H4 | 86 | 1 |
| 14525-MFA-D01 | F8 | 58 | 5 |
| | H4 | 86 | 1 |
| 14546-MCJ-000 | F8 | 58 | 6 |
| 14620-MWO-003 | F8 | 58 | 7 |
| 14626-MCJ-000 | F8 | 58 | 8 |
| 14711-MEL-000 | F4 | 54 | 5 |
| 14711-MEL-D20 | F4 | 54 | 5 |
| 14721-MEL-000 | F4 | 54 | 6 |
| 14731-MCJ-000 | F4 | 54 | 7 |
| 14751-MEL-000 | F4 | 54 | 8 |
| 14751-MEL-D20 | F6 | 56 | 15 |
| 14752-MEL-D20 | F6 | 56 | 16 |
| 14761-MEL-D20 | F7 | 57 | 17 |
| 14771-MBW-000 | F4 | 54 | 9 |
| 14771-MEE-000 | F7 | 57 | 18 |
| 14775-MBW-000 | F4 | 54 | 10 |
| 14775-MEE-000 | F7 | 57 | 19 |
| 14781-MV9-671 | F4 | 54 | 11 |
| 14901-KT7-013 | F4 | 54 | 12 |
| 14902-KT7-013 | F4 | 54 | 12 |
| 14903-KT7-013 | F4 | 54 | 12 |
| 14904-KT7-013 | F4 | 54 | 12 |
| 14905-KT7-013 | F4 | 54 | 12 |
| 14906-KT7-013 | F4 | 54 | 12 |
| 14907-KT7-013 | F4 | 54 | 12 |
| 14908-KT7-013 | F4 | 54 | 12 |
| 14909-KT7-013 | F4 | 54 | 12 |
| 14910-KT7-013 | F4 | 54 | 12 |
| 14911-KT7-013 | F4 | 54 | 12 |
| 14912-KT7-013 | F4 | 54 | 12 |
| 14913-KT7-013 | F5 | 55 | 12 |
| 14914-KT7-013 | F5 | 55 | 12 |
| 14915-KT7-013 | F5 | 55 | 12 |
| 14916-KT7-013 | F5 | 55 | 12 |
| 14917-KT7-013 | F5 | 55 | 12 |
| 14918-KT7-013 | F5 | 55 | 12 |
| 14919-KT7-013 | F5 | 55 | 12 |
| 14920-KT7-013 | F5 | 55 | 12 |
| 14921-KT7-013 | F5 | 55 | 12 |
| 14922-KT7-013 | F5 | 55 | 12 |
| 14923-KT7-013 | F5 | 55 | 12 |
| 14924-KT7-013 | F5 | 55 | 12 |
| 14925-KT7-013 | F5 | 55 | 12 |
| 14926-KT7-013 | F5 | 55 | 12 |
| 14927-KT7-013 | F5 | 55 | 12 |
| 14928-KT7-013 | F5 | 55 | 12 |
| 14929-KT7-013 | F5 | 55 | 12 |
| 14930-KT7-013 | F5 | 55 | 12 |
| 14931-KT7-013 | F5 | 55 | 12 |
| 14932-KT7-013 | F5 | 55 | 12 |
| 14933-KT7-013 | F5 | 55 | 12 |
| 14934-KT7-013 | F5 | 55 | 12 |
| 14935-KT7-013 | F5 | 55 | 12 |
| 14936-KT7-013 | F5 | 55 | 12 |
| 14937-KT7-013 | F5 | 55 | 12 |
| 14938-KT7-013 | F5 | 55 | 12 |
| 14939-KT7-013 | F5 | 55 | 12 |
| 14940-KT7-013 | F5 | 55 | 12 |
| 14941-KT7-013 | F5 | 55 | 12 |
| 14942-KT7-013 | F6 | 56 | 12 |
| 14943-KT7-013 | F6 | 56 | 12 |
| 14944-KT7-013 | F6 | 56 | 12 |
| 14945-KT7-013 | F6 | 56 | 12 |
| 14946-KT7-013 | F6 | 56 | 12 |
| 14947-KT7-013 | F6 | 56 | 12 |
| 14948-KT7-013 | F6 | 56 | 12 |
| 14949-KT7-013 | F6 | 56 | 12 |
| 14950-KT7-013 | F6 | 56 | 12 |
| 14951-KT7-013 | F6 | 56 | 12 |
| 14952-KT7-013 | F6 | 56 | 12 |
| 14953-KT7-013 | F6 | 56 | 12 |
| 14954-KT7-013 | F6 | 56 | 12 |
| 14955-KT7-013 | F6 | 56 | 12 |
| 14956-KT7-013 | F6 | 56 | 12 |
| 14957-KT7-013 | F6 | 56 | 12 |
| 14958-KT7-013 | F6 | 56 | 12 |
| 14959-KT7-013 | F6 | 56 | 12 |
| 14960-KT7-013 | F6 | 56 | 12 |
| 14961-KT7-013 | F6 | 56 | 12 |
| 14962-KT7-013 | F6 | 56 | 12 |
| 14963-KT7-013 | F6 | 56 | 12 |
| 14964-KT7-013 | F6 | 56 | 12 |
| 14965-KT7-013 | F6 | 56 | 12 |
| 15000 | | | |
| 15100-MEL-000 | G3 | 69 | 3 |
| 15131-MEL-003 | F10 | 60 | 1 |
| 15134-MEL-000 | G3 | 69 | 4 |
| 15141-MEL-003 | G3 | 69 | 5 |
| 15150-MEL-000 | G3 | 69 | 6 |
| 15154-MAT-000 | G3 | 69 | 7 |
| | H5 | 87 | 1 |
| 15155-MEL-000 | G3 | 69 | 8 |
| 15220-MBW-000 | G3 | 69 | 9 |
| 15220-MEL-D20 | G3 | 69 | 9 |
| 15410-MCJ-003 | G3 | 69 | 10 |
| 15611-KA4-710 | F9 | 59 | 3 |
| 15700-MEL-000 | G3 | 69 | 11 |
| 15772-GB5-670 | K12 | 131 | 1 |
| 16000 | | | |
| 16017-MEL-003 | H1 | 83 | 1 |
| 16018-MEE-003 | H1 | 83 | 2 |
| 16029-MEL-003 | H1 | 83 | 3 |
| 16029-MEL-013 | H1 | 83 | 3 |
| 16029-MEL-D21 | H1 | 83 | 3 |
| 16044-MCW-003 | H1 | 83 | 4 |
| 16046-MEE-003 | H1 | 83 | 5 |
| 16046-MEL-003 | H1 | 83 | 6 |
| 16080-MCJ-003 | H1 | 83 | 7 |
| 16106-KW7-900 | K1 | 120 | 34 |
| 16169-MEL-003 | H1 | 83 | 8 |
| 16169-MEL-013 | H1 | 83 | 8 |
| 16210-MEL-000 | F2 | 52 | 5 |
| 16210-MEL-621 | F2 | 52 | 5 |
| 16210-MEL-D20 | F2 | 52 | 5 |
| 16218-MEL-000 | F2 | 52 | 6 |
| 16222-MV4-300 | F2 | 52 | 7 |
| 16400-MEL-003 | H1 | 83 | 9 |
| 16400-MEL-013 | H1 | 83 | 9 |
| 16400-MEL-D21 | H1 | 83 | 9 |
| 16401-MEL-003 | H1 | 83 | 10 |
| 16401-MEL-013 | H1 | 83 | 10 |
| 16401-MEL-D21 | H1 | 83 | 10 |
| 16450-MEL-003 | H1 | 83 | 11 |
| | H3 | 85 | 1 |
| 16460-MEL-D21 | H3 | 85 | 1 |
| 16472-MCW-000 | H1 | 83 | 12 |
| 16472-MEL-000 | H3 | 85 | 2 |
| 16473-P7A-004 | H1 | 83 | 13 |
| | H3 | 85 | 3 |
| 16510-MEL-000 | H3 | 85 | 4 |
| 16527-MEL-004 | H3 | 85 | 5 |
| 16542-MEL-003 | H1 | 83 | 14 |
| 16546-HW4-680 | M12 | 163 | 20 |
| 16610-MEL-003 | H1 | 83 | 15 |
| 16620-MEL-000 | H3 | 85 | 6 |
| 16700-MEL-003 | J15 | 118 | 1 |
| 16700-MEL-013 | J15 | 118 | 1 |
| 16700-MEL-D20 | J15 | 118 | 1 |
| 16700-MEL-D21 | J15 | 118 | 1 |
| 16723-MEL-D20 | K1 | 120 | 42 |
| 16724-MEL-D20 | K1 | 120 | 43 |
| 16965-MEL-D21 | H2 | 84 | 27 |
| 17000 | | | |
| 17201-MCJ-003 | H2 | 84 | 16 |
| 17204-MEL-000 | K10 | 129 | 1 |
| | K15 | 134 | 1 |
| 17209-MEL-D20 | K13 | 132 | 1 |
| 17210-MEL-000 | K8 | 127 | 1 |
| | K13 | 132 | 2 |
| 17215-MEL-000 | K8 | 127 | 2 |
| 17215-MEL-D21 | K13 | 132 | 3 |
| 17215-MEL-F21 | K13 | 132 | 3 |
| 17220-MEL-000 | K8 | 127 | 3 |
| 17220-MEL-010 | K8 | 127 | 3 |

4

# PART NO. INDEX


| Part Number | Address | Page | Ref. |
|---|---|---|---|
| 17220-MEL-D20 | K13 | 132 | 4 |
| 17222-MEL-300 | K8 | 127 | 4 |
| | K13 | 132 | 5 |
| 17223-MEL-300 | K8 | 127 | 5 |
| | K10 | 129 | 2 |
| | K13 | 132 | 6 |
| | K15 | 134 | 2 |
| 17225-MEL-000 | K8 | 127 | 6 |
| 17225-MEL-D21 | K13 | 132 | 7 |
| 17225-MEL-F21 | K13 | 132 | 7 |
| 17226-MEL-300 | K8 | 127 | 7 |
| | K13 | 132 | 8 |
| 17228-MEL-000 | K8 | 127 | 8 |
| 17228-MEL-D20 | K13 | 132 | 9 |
| 17230-MEL-000 | K8 | 127 | 9 |
| | K13 | 132 | 10 |
| 17231-MEL-000 | K8 | 127 | 10 |
| 17231-MEL-D20 | K13 | 132 | 11 |
| 17233-MEL-300 | K8 | 127 | 11 |
| | K13 | 132 | 12 |
| 17234-MEL-300 | K8 | 127 | 12 |
| | K13 | 132 | 13 |
| 17235-MEL-000 | K8 | 127 | 13 |
| 17238-MEL-000 | K10 | 129 | 3 |
| 17238-MEL-D20 | K15 | 134 | 3 |
| 17240-MEL-000 | K10 | 129 | 4 |
| 17240-MEL-D20 | K15 | 134 | 4 |
| 17241-MEL-D20 | K15 | 134 | 5 |
| 17242-MEL-D20 | K15 | 134 | 6 |
| 17251-KE8-690 | M1 | 152 | 1 |
| 17251-MEL-000 | K10 | 129 | 5 |
| 17251-MEL-010 | K10 | 129 | 5 |
| 17251-MEL-D20 | K15 | 134 | 7 |
| 17254-MEL-300 | K10 | 129 | 6 |
| | K15 | 134 | 8 |
| 17257-MEL-000 | K10 | 129 | 7 |
| 17257-MEL-D20 | K15 | 134 | 9 |
| 17259-MEL-300 | K10 | 129 | 8 |
| | K15 | 134 | 10 |
| 17260-MEL-000 | K10 | 129 | 9 |
| 17260-MEL-D20 | K15 | 134 | 11 |
| 17269-MEL-000 | K12 | 131 | 2 |
| 17269-MEL-D20 | L1 | 136 | 1 |
| 17275-MEL-300 | K10 | 129 | 10 |
| | K15 | 134 | 12 |
| 17280-MEL-A00 | K13 | 132 | 14 |
| 17285-MEL-A00 | K13 | 132 | 15 |
| 17414-PC6-660 | J15 | 118 | 2 |
| 17460-MEL-000 | K12 | 131 | 3 |
| 17460-MEL-D20 | L1 | 136 | 2 |
| 17465-MEL-000 | K12 | 131 | 4 |
| 17465-MEL-D20 | L1 | 136 | 3 |
| 17466-MEL-000 | K12 | 131 | 5 |
| 17466-MEL-D20 | L1 | 136 | 4 |
| 17520-MEL-020 | J15 | 118 | 3 |
| 17520-MEL-030 | J15 | 118 | 3 |
| 17520-MEL-D00 | J15 | 118 | 3 |
| 17520-MEL-D20 | J15 | 118 | 3 |
| 17526-MEL-004 | J15 | 118 | 4 |

| Part Number | Address | Page | Ref. |
|---|---|---|---|
| 17526-MEL-014 | J16 | 119 | 4 |
| 17526-MEL-D20 | J16 | 119 | 4 |
| 17528-KCZ-930 | K1 | 120 | 40 |
| 17528-MAT-D70 | 2-B8 | 191 | 1 |
| 17528-MR4-900 | K1 | 120 | 35 |
| | L14 | 149 | 32 |
| 17533-MEL-000 | J16 | 119 | 5 |
| 17534-MEE-000 | J16 | 119 | 6 |
| 17535-MEL-010 | J16 | 119 | 7 |
| 17535-MEL-D20 | J16 | 119 | 7 |
| 17538-MEE-000 | J16 | 119 | 8 |
| 17538-MEE-D00 | J16 | 119 | 8 |
| 17543-MEE-000 | J16 | 119 | 9 |
| 17545-MEL-000 | J16 | 119 | 10 |
| 17551-MEL-000 | K8 | 127 | 16 |
| | K13 | 132 | 16 |
| 17554-MB0-000 | K8 | 127 | 17 |
| | K12 | 131 | 6 |
| | L1 | 136 | 5 |
| 17554-MEL-300 | K1 | 120 | 36 |
| 17555-MEL-000 | J16 | 119 | 11 |
| 17555-MEL-D20 | K1 | 120 | 44 |
| 17556-MEL-300 | J16 | 119 | 12 |
| 17556-MEL-D20 | K2 | 121 | 45 |
| 17557-MEL-300 | J16 | 119 | 13 |
| 17557-MEL-D20 | K2 | 121 | 46 |
| 17558-MEL-000 | F16 | 66 | 8 |
| 17559-MEL-310 | J16 | 119 | 15 |
| 17559-MEL-D00 | J16 | 119 | 15 |
| 17559-MEL-D20 | K2 | 121 | 47 |
| 17561-MEL-000 | J16 | 119 | 16 |
| 17562-MEL-000 | J16 | 119 | 17 |
| 17562-MEL-010 | J16 | 119 | 17 |
| 17562-MEL-D00 | J16 | 119 | 17 |
| 17565-MEL-000 | J16 | 119 | 18 |
| 17565-MEL-D00 | J16 | 119 | 18 |
| 17574-MEE-000 | J16 | 119 | 19 |
| 17575-MEL-000 | K1 | 120 | 39 |
| 17601-MEL-300 | J16 | 119 | 14 |
| 17620-MCJ-751 | J16 | 119 | 20 |
| 17724-102-700 | K8 | 127 | 17 |
| | K12 | 131 | 6 |
| | K13 | 132 | 17 |
| | L1 | 136 | 6 |
| 17910-MEL-000 | I5 | 92 | 1 |
| 17920-MEL-000 | I5 | 92 | 2 |
| 18000 | | | |
| 18150-MEL-013 | L2 | 137 | 1 |
| 18150-MEL-611 | L2 | 137 | 1 |
| 18150-MEL-D21 | L5 | 140 | 1 |
| 18150-MEL-L20 | L5 | 140 | 1 |
| 18176-MEL-000 | L2 | 137 | 2 |
| 18176-MEL-D20 | L5 | 140 | 2 |
| 18177-MEL-000 | L2 | 137 | 3 |
| 18177-MEL-D20 | L5 | 140 | 3 |
| 18178-MEL-000 | L2 | 137 | 4 |
| 18178-MEL-D20 | L5 | 140 | 4 |

| Part Number | Address | Page | Ref. |
|---|---|---|---|
| 18180-MEL-000 | M11 | 162 | 1 |
| 18180-MEL-D20 | M12 | 163 | 1 |
| 18183-MEL-000 | M11 | 162 | 2 |
| 18183-MEL-D20 | M12 | 163 | 2 |
| 18184-MEL-000 | M11 | 162 | 3 |
| 18184-MEL-D20 | M12 | 163 | 3 |
| 18185-MEL-000 | M11 | 162 | 4 |
| 18185-MEL-D20 | M12 | 163 | 4 |
| 18186-MEL-000 | M11 | 162 | 5 |
| 18186-MEL-D20 | M12 | 163 | 5 |
| 18189-MEL-000 | M11 | 162 | 6 |
| 18195-MEL-000 | M11 | 162 | 7 |
| 18195-MEL-D20 | M12 | 163 | 6 |
| 18196-MEL-310 | L2 | 137 | 5 |
| 18196-MEL-D20 | L5 | 140 | 5 |
| 18197-MEL-000 | L2 | 137 | 6 |
| | L5 | 140 | 6 |
| 18200-MEL-013 | L2 | 137 | 7 |
| 18200-MEL-A20 | L5 | 140 | 7 |
| 18200-MEL-D01 | L2 | 137 | 7 |
| 18200-MEL-D20 | L5 | 140 | 7 |
| 18291-MEL-000 | H4 | 86 | 1 |
| | L2 | 137 | 8 |
| 18291-MEL-D20 | H4 | 86 | 1 |
| | L5 | 140 | 8 |
| 18293-GN2-000 | L2 | 137 | 9 |
| | L5 | 140 | 9 |
| 18293-MCA-A20 | L2 | 137 | 10 |
| 18325-MEL-013 | L2 | 137 | 11 |
| 18325-MEL-D00 | L2 | 137 | 11 |
| 18325-MEL-D20 | L5 | 140 | 10 |
| 18326-MEE-D00 | L5 | 140 | 11 |
| 18327-KAE-000 | L2 | 137 | 12 |
| 18327-MEL-D20 | L5 | 140 | 12 |
| 18328-MEL-000 | L2 | 137 | 13 |
| | L5 | 140 | 13 |
| 18330-MEL-003 | L2 | 137 | 14 |
| 18330-MEL-D00 | L2 | 137 | 14 |
| | L5 | 140 | 14 |
| 18340-MEL-000 | L2 | 137 | 15 |
| 18340-MEL-010 | L2 | 137 | 15 |
| 18345-MBT-610 | L2 | 137 | 16 |
| | L5 | 140 | 15 |
| 18345-MEL-023 | L2 | 137 | 17 |
| 18345-MEL-D00 | L2 | 137 | 17 |
| 18345-MEL-D20 | L5 | 140 | 16 |
| 18360-MEL-D20 | L5 | 140 | 17 |
| 18371-MEL-003 | L2 | 137 | 18 |
| | L5 | 140 | 18 |
| 18372-MEL-000 | L3 | 138 | 19 |
| | L5 | 140 | 19 |
| 18373-MEL-000 | L3 | 138 | 20 |
| | L5 | 140 | 20 |
| 18375-MEL-000 | L3 | 138 | 21 |
| 18375-MEL-010 | L3 | 138 | 21 |
| | L5 | 140 | 21 |
| 18380-MEL-013 | L3 | 138 | 22 |
| 18380-MEL-A20 | L5 | 140 | 22 |
| 18380-MEL-D20 | L6 | 141 | 22 |

| Part Number | Address | Page | Ref. |
|---|---|---|---|
| 18391-MEL-000 | L3 | 138 | 23 |
| | L6 | 141 | 23 |
| 18392-MEL-000 | L3 | 138 | 24 |
| | L6 | 141 | 24 |
| 18421-MB0-000 | L3 | 138 | 25 |
| 18421-MEE-D00 | L6 | 141 | 25 |
| 18424-MN5-000 | L3 | 138 | 26 |
| 18532-634-670 | M11 | 162 | 8 |
| 18601-MCJ-000 | F1 | 51 | 6 |
| 18910-MEL-000 | M11 | 162 | 9 |
| 18910-MEL-D20 | M12 | 163 | 7 |
| 18920-MEL-000 | M11 | 162 | 10 |
| 18920-MEL-D20 | M12 | 163 | 8 |
| 19000 | | | |
| 19010-MEL-003 | N4 | 171 | 1 |
| 19010-MEL-D01 | N4 | 171 | 1 |
| 19010-MEL-D21 | N6 | 173 | 1 |
| 19014-KEA-003 | N4 | 171 | 2 |
| | N6 | 173 | 2 |
| 19015-MEL-003 | N4 | 171 | 3 |
| 19015-MEL-D21 | N6 | 173 | 3 |
| 19020-MAT-E02 | N4 | 171 | 4 |
| 19020-MFA-D01 | N6 | 173 | 4 |
| 19030-MEL-003 | N4 | 171 | 5 |
| 19030-MEL-D21 | N6 | 173 | 5 |
| 19032-MEL-000 | N4 | 171 | 6 |
| 19032-MEL-D20 | N6 | 173 | 6 |
| 19037-GEE-710 | N4 | 171 | 7 |
| | N6 | 173 | 7 |
| 19039-MEL-003 | N4 | 171 | 8 |
| | N6 | 173 | 8 |
| 19046-PAA-A00 | N4 | 171 | 9 |
| | N6 | 173 | 9 |
| 19051-KA3-710 | N6 | 173 | 10 |
| 19051-KA3-830 | N4 | 171 | 10 |
| | N6 | 173 | 11 |
| 19052-MAC-680 | N4 | 171 | 11 |
| | N6 | 173 | 12 |
| 19060-MEL-000 | G15 | 81 | 1 |
| 19060-MEL-D20 | G15 | 81 | 1 |
| 19082-MEL-D20 | G15 | 81 | 10 |
| 19101-MEL-000 | N4 | 171 | 12 |
| 19101-MEL-D20 | N6 | 173 | 13 |
| 19102-KT8-000 | J16 | 119 | 21 |
| 19103-MEL-D20 | N6 | 173 | 14 |
| 19103-ML7-000 | J16 | 119 | 22 |
| 19104-MB0-700 | N4 | 171 | 13 |
| | N6 | 173 | 15 |
| 19104-MEL-000 | N4 | 171 | 14 |
| 19104-MEL-D20 | N6 | 173 | 16 |
| 19111-MF5-000 | M8 | 159 | 1 |
| 19113-MEL-000 | N4 | 171 | 15 |
| 19113-MEL-D20 | N6 | 173 | 17 |
| 19117-MEL-000 | N4 | 171 | 16 |
| 19119-MEL-000 | N4 | 171 | 17 |
| 19125-MEL-000 | N4 | 171 | 18 |
| 19160-MEL-D20 | K15 | 134 | 13 |

| Part Number | Address | Page | Ref. |
|---|---|---|---|
| 19170-MEL-020 | K10 | 129 | 11 |
| 19170-MEL-D20 | K15 | 134 | 14 |
| 19200-MEL-000 | F16 | 66 | 9 |
| 19200-MEL-010 | F16 | 66 | 9 |
| 19200-MEL-020 | F16 | 66 | 9 |
| 19200-MEL-D20 | F16 | 66 | 9 |
| 19221-MEL-300 | F16 | 66 | 10 |
| 19221-MEL-D20 | F16 | 66 | 10 |
| 19226-MEL-300 | F16 | 66 | 11 |
| | H5 | 87 | 1 |
| 19231-MEL-300 | F16 | 66 | 12 |
| 19300-MCJ-003 | G15 | 81 | 2 |
| 19305-KV3-010 | G15 | 81 | 3 |
| 19311-MCJ-305 | G15 | 81 | 4 |
| 19311-MEL-305 | G15 | 81 | 4 |
| 19312-MBW-000 | G15 | 81 | 5 |
| | H5 | 87 | 1 |
| 19315-MEL-000 | G15 | 81 | 6 |
| 19501-MEL-000 | N4 | 171 | 19 |
| 19501-MEL-D20 | N6 | 173 | 18 |
| 19502-MEL-000 | N4 | 171 | 20 |
| 19502-MEL-D20 | N6 | 173 | 19 |
| 19503-MCT-000 | N4 | 171 | 21 |
| 19503-MEL-000 | N4 | 171 | 22 |
| 19503-MEL-D20 | N6 | 173 | 20 |
| 19504-KT7-751 | N4 | 171 | 23 |
| | N6 | 173 | 21 |
| 19504-KY1-003 | G15 | 81 | 7 |
| | | | 8 |
| 19504-MEL-000 | N4 | 171 | 24 |
| 19504-MEL-D20 | N6 | 173 | 22 |
| 19505-KS6-700 | G15 | 81 | 8 |
| | N5 | 172 | 25 |
| | N6 | 173 | 23 |
| 19506-MEL-D20 | N6 | 173 | 24 |
| 19507-MAT-000 | G15 | 81 | 9 |
| 19507-MEE-000 | G15 | 81 | 10 |
| | N5 | 172 | 26 |
| | N6 | 173 | 25 |
| 19508-MEL-000 | N5 | 172 | 27 |
| 19508-MEL-D20 | N7 | 174 | 26 |
| 19509-MEL-000 | N5 | 172 | 28 |
| 19509-MEL-D20 | N7 | 174 | 27 |
| 19516-GAG-003 | G15 | 81 | 11 |
| | N5 | 172 | 29 |
| | N7 | 174 | 28 |
| 19523-MEL-000 | G15 | 81 | 12 |
| 19524-MEL-000 | G15 | 81 | 13 |
| 19524-MEL-D20 | G15 | 81 | 13 |
| 19525-MEL-000 | G15 | 81 | 14 |
| 19525-MEL-D20 | G15 | 81 | 14 |
| 19526-MEL-000 | G15 | 81 | 15 |
| 19526-MEL-D20 | G15 | 81 | 15 |
| 19527-MEL-000 | G16 | 82 | 16 |
| 19528-MEL-000 | G16 | 82 | 17 |
| 19621-ZG3-880 | N1 | 168 | 1 |
| 19639-GBL-000 | L10 | 145 | 27 |

# PART NO. INDEX

2-D 3


| Part Number | Address | Page | Ref. |
|---|---|---|---|
| 22000 | | | |
| 22100-MEL-020 | F10 | 60 | 2 |
| 22100-MEL-D20 | F10 | 60 | 2 |
| 22110-MEL-000 | F10 | 60 | 2 |
| 22110-MEL-020 | F10 | 60 | 2 |
| 22110-MEL-D20 | F10 | 60 | 2 |
| 22116-MEL-000 | F10 | 60 | 3 |
| 22117-MEL-000 | F10 | 60 | 4 |
| 22117-MEL-D20 | F10 | 60 | 4 |
| 22118-MEL-000 | F10 | 60 | 4 |
| 22118-MEL-D20 | F10 | 60 | 4 |
| 22120-MEL-000 | F10 | 60 | 5 |
| 22120-MEL-D20 | F10 | 60 | 5 |
| 22201-MBB-000 | F10 | 60 | 6 |
| 22201-MEL-000 | F10 | 60 | 7 |
| 22321-MEL-000 | F10 | 60 | 8 |
| | F11 | 61 | 22 |
| 22322-MEL-000 | F12 | 62 | 22 |
| 22325-MEL-000 | F10 | 60 | 9 |
| 22325-MN4-000 | F10 | 60 | 9 |
| 22326-MBB-000 | F10 | 60 | 10 |
| 22326-MEL-000 | F10 | 60 | 10 |
| 22350-MEL-000 | F11 | 61 | 11 |
| 22350-MFA-D00 | F11 | 61 | 11 |
| 22366-MM5-000 | F11 | 61 | 12 |
| 22401-MEL-000 | F11 | 61 | 13 |
| 22850-MEL-000 | F11 | 61 | 14 |
| 22850-MEL-D20 | F11 | 61 | 14 |
| 22860-MEJ-003 | F16 | 66 | 13 |
| 22862-MW7-650 | F16 | 66 | 14 |
| | H5 | 87 | 1 |
| 22863-MEJ-003 | F16 | 66 | 15 |
| 22864-MEJ-003 | F16 | 66 | 16 |
| 22866-MF2-711 | F16 | 66 | 17 |
| 22884-MAT-E01 | I9 | 96 | 1 |
| 22885-MB0-006 | I9 | 96 | 2 |
| 22886-MAT-E01 | I9 | 96 | 3 |
| 22887-MBB-006 | I9 | 96 | 4 |
| 22888-MR7-006 | I9 | 96 | 5 |
| 22889-MR7-006 | I9 | 96 | 6 |
| 22890-MEL-006 | I9 | 96 | 7 |
| 22890-MEL-016 | I9 | 96 | 7 |
| 22890-MR7-006 | I9 | 96 | 8 |
| 22900-MEL-000 | I9 | 96 | 9 |
| 22912-MEL-000 | I9 | 96 | 10 |
| 22912-MEL-D30 | I9 | 96 | 10 |
| 23000 | | | |
| 23211-MEL-000 | G10 | 76 | 1 |
| 23211-MEL-D20 | G10 | 76 | 1 |
| 23212-MEL-000 | G10 | 76 | 2 |
| 23212-MEL-D20 | G10 | 76 | 2 |
| 23220-MEL-000 | G10 | 76 | 3 |
| 23421-MEL-000 | G10 | 76 | 4 |
| 23431-MEL-000 | G10 | 76 | 5 |
| 23441-MEL-000 | G10 | 76 | 6 |
| 23441-MEL-D20 | G10 | 76 | 6 |
| 23442-MCJ-000 | G10 | 76 | 7 |
| 23451-MEL-000 | G10 | 76 | 8 |
| 23451-MEL-D20 | G10 | 76 | 8 |
| 23461-MEL-000 | G10 | 76 | 9 |
| 23461-MEL-D20 | G10 | 76 | 9 |
| 23462-MAT-000 | G10 | 76 | 10 |
| 23481-MEL-000 | G10 | 76 | 11 |
| 23481-MEL-D20 | G10 | 76 | 11 |
| 23482-MCJ-000 | G10 | 76 | 12 |
| 23482-MR7-000 | G10 | 76 | 12 |
| 23491-MEL-000 | G10 | 76 | 13 |
| 23491-MEL-D20 | G10 | 76 | 13 |
| 23495-MM5-000 | G10 | 76 | 14 |
| 23501-MEL-000 | G10 | 76 | 15 |
| 23501-MEL-D20 | G10 | 76 | 15 |
| 23511-MEL-000 | G11 | 77 | 16 |
| 23511-MEL-D20 | G11 | 77 | 16 |
| 23521-MEL-000 | G11 | 77 | 17 |
| 23521-MEL-D20 | G11 | 77 | 17 |
| 23801-MCJ-750 | G11 | 77 | 18 |
| 24000 | | | |
| 24211-MEL-000 | G13 | 79 | 1 |
| 24212-MEL-000 | G13 | 79 | 2 |
| 24310-MEL-000 | G13 | 79 | 3 |
| 24310-MEL-D20 | G13 | 79 | 3 |
| 24314-MEL-000 | G13 | 79 | 4 |
| 24314-MEL-D20 | G13 | 79 | 4 |
| 24315-MEL-300 | G13 | 79 | 5 |
| 24321-MEL-000 | G13 | 79 | 6 |
| 24321-MFA-D00 | G13 | 79 | 6 |
| 24322-MEL-000 | G13 | 79 | 7 |
| 24411-MEL-003 | G13 | 79 | 8 |
| 24430-KK0-000 | G13 | 79 | 9 |
| 24435-MEL-000 | G13 | 79 | 10 |
| 24610-MEL-000 | G13 | 79 | 11 |
| 24610-MFA-D00 | G13 | 79 | 11 |
| 24651-MBB-000 | G13 | 79 | 12 |
| 24652-035-000 | G13 | 79 | 13 |
| 24705-MR7-000 | L8 | 143 | 1 |
| 24710-MEE-000 | L8 | 143 | 2 |
| 24720-MEL-000 | L8 | 143 | 3 |
| 28000 | | | |
| 28100-MEL-000 | F13 | 63 | 1 |
| 28100-MEL-D20 | F13 | 63 | 1 |
| 28102-ML7-000 | F13 | 63 | 2 |
| 28110-MEL-000 | F13 | 63 | 3 |
| 28115-MEL-000 | F13 | 63 | 4 |
| 28115-MEL-D20 | F13 | 63 | 4 |
| 28126-MEL-000 | F13 | 63 | 5 |
| 28141-MEL-000 | F13 | 63 | 6 |
| 28333-300-000 | L9 | 144 | 1 |
| 28810-P7Z-004 | F2 | 52 | 8 |
| 30000 | | | |
| 30300-MEL-000 | F9 | 59 | 4 |
| 30300-MEL-D21 | F9 | 59 | 4 |
| 30430-MEL-305 | I11 | 98 | 1 |
| 30430-MEL-315 | I11 | 98 | 1 |
| 30430-MEL-325 | I11 | 98 | 1 |
| 30430-MEL-335 | I11 | 98 | 1 |
| 30430-MEL-640 | I11 | 98 | 1 |
| 30430-MEL-641 | I11 | 98 | 1 |
| 30430-MEL-642 | I11 | 98 | 1 |
| 30432-MBW-E00 | I11 | 98 | 2 |
| 30433-MBW-600 | I11 | 98 | 3 |
| 30433-MBW-601 | I11 | 98 | 4 |
| 30700-MEL-003 | M13 | 164 | 1 |
| | M15 | 166 | 1 |
| 31000 | | | |
| 31110-MEL-003 | F15 | 65 | 2 |
| 31110-MEL-D21 | F15 | 65 | 2 |
| 31120-MEL-013 | F15 | 65 | 3 |
| 31120-MEL-D21 | F15 | 65 | 3 |
| 31200-MEL-000 | G2 | 68 | 1 |
| 31200-MEL-D21 | G2 | 68 | 1 |
| 31201-MBE-008 | G2 | 68 | 5 |
| 31204-KS5-901 | G2 | 68 | 6 |
| 31205-MEL-D20 | G2 | 68 | 7 |
| 31206-MBE-008 | G2 | 68 | 8 |
| 31207-MBE-008 | G2 | 68 | 9 |
| 31420-MEL-000 | M11 | 162 | 11 |
| 31420-MEL-D21 | M12 | 163 | 9 |
| 31421-MEL-000 | M11 | 162 | 12 |
| 31425-KAE-004 | M11 | 162 | 13 |
| 31425-MEL-000 | M11 | 162 | 14 |
| 31425-MEL-D00 | M11 | 162 | 14 |
| 31500-MCJ-642 | M9 | 160 | 1 |
| | M10 | 161 | 1 |
| 31500-MCJ-K00 | M9 | 160 | 1 |
| | M10 | 161 | 1 |
| 31500-MEE-D02 | M10 | 161 | 1 |
| 31500-MEE-K02 | M10 | 161 | 1 |
| 31600-MEL-003 | M13 | 164 | 2 |
| 31600-MEL-013 | M13 | 164 | 2 |
| 31600-MEL-A21 | M15 | 166 | 2 |
| 31600-MEL-D21 | M15 | 166 | 2 |
| 31605-MEL-010 | M13 | 164 | 3 |
| 31605-MEL-D00 | M13 | 164 | 3 |
| 31605-MEL-D20 | M15 | 166 | 3 |
| 31606-MEL-010 | M13 | 164 | 4 |
| 31606-MEL-020 | M13 | 164 | 4 |
| 31607-MEL-000 | M13 | 164 | 5 |
| 31607-MEL-010 | M13 | 164 | 5 |
| 31607-MEL-D20 | M15 | 166 | 4 |
| 31730-MAS-601 | M13 | 164 | 6 |
| | M15 | 166 | 5 |
| 31912-MEL-003 | F2 | 52 | 9 |
| 31922-MEL-003 | F2 | 52 | 9 |
| 32000 | | | |
| 32100-MEL-610 | M13 | 164 | 7 |
| 32100-MEL-640 | M13 | 164 | 7 |
| 32100-MEL-670 | M13 | 164 | 7 |
| 32100-MEL-A00 | M13 | 164 | 7 |
| 32100-MEL-D00 | M13 | 164 | 7 |
| 32100-MEL-D20 | M15 | 166 | 6 |
| 32100-MEL-D21 | M15 | 166 | 6 |
| 32100-MEL-D30 | M15 | 166 | 6 |
| 32100-MEL-G00 | M13 | 164 | 7 |
| 32100-MEL-M22 | M15 | 166 | 6 |
| 32100-MEL-M30 | M15 | 166 | 6 |
| 32101-MEL-000 | G5 | 71 | 11 |
| 32101-MEL-D20 | G5 | 71 | 11 |
| 32102-MEL-000 | M13 | 164 | 8 |
| 32102-MEL-D20 | M15 | 166 | 7 |
| 32103-MEL-600 | M13 | 164 | 9 |
| 32103-MEL-640 | M13 | 164 | 9 |
| 32103-MEL-D00 | M13 | 164 | 9 |
| 32103-MEL-D20 | M15 | 166 | 8 |
| 32103-MEL-D30 | M15 | 166 | 8 |
| 32103-MEL-E00 | M13 | 164 | 9 |
| 32103-MEL-E20 | M15 | 166 | 8 |
| 32103-MEL-E30 | M15 | 166 | 8 |
| 32108-MEL-000 | I14 | 101 | 1 |
| 32109-MEL-000 | F2 | 52 | 10 |
| 32118-MEL-000 | I14 | 101 | 2 |
| 32120-MEL-000 | G5 | 71 | 12 |
| 32120-MEL-010 | G5 | 71 | 12 |
| 32120-MEL-D00 | G5 | 71 | 12 |
| 32171-MEB-670 | M16 | 167 | 37 |
| 32401-MEL-000 | M9 | 160 | 2 |
| 32401-MEL-D20 | M10 | 161 | 2 |
| 32406-MEL-300 | M9 | 160 | 3 |
| 32410-MEL-000 | M9 | 160 | 4 |
| 32410-MEL-D20 | M10 | 161 | 3 |
| 32410-MEL-D30 | M10 | 161 | 3 |
| 32411-253-000 | M9 | 160 | 6 |
| | M10 | 161 | 5 |
| 32411-MBW-D20 | M9 | 160 | 5 |
| 32411-MEL-D20 | M10 | 161 | 4 |
| 32601-MEL-000 | M9 | 160 | 7 |
| 32601-MEL-010 | M9 | 160 | 7 |
| 32601-MEL-D20 | M10 | 161 | 6 |
| 32606-GEV-761 | M14 | 165 | 33 |
| | M15 | 166 | 9 |
| 32606-MEL-D01 | M14 | 165 | 34 |
| | M15 | 166 | 10 |
| 32925-958-000 | I2 | 89 | 17 |
| | N2 | 169 | 43 |
| 32999-MEL-D20 | G2 | 68 | 10 |
| 33000 | | | |
| 33100-MEL-601 | I1 | 88 | 1 |
| 33100-MEL-641 | I1 | 88 | 1 |
| 33100-MEL-642 | I1 | 88 | 1 |
| 33100-MEL-671 | I1 | 88 | 1 |
| 33100-MEL-A21 | I1 | 88 | 1 |
| 33100-MEL-D21 | I1 | 88 | 1 |
| 33100-MEL-E21 | I1 | 88 | 1 |
| 33102-MEL-600 | I1 | 88 | 2 |
| 33102-MEL-640 | I1 | 88 | 2 |
| 33102-MEL-641 | I1 | 88 | 2 |
| 33102-MEL-670 | I1 | 88 | 2 |
| 33102-MEL-A21 | I1 | 88 | 2 |
| 33102-MEL-D21 | I1 | 88 | 2 |
| 33102-MEL-E21 | I1 | 88 | 2 |
| 33103-MEL-000 | I1 | 88 | 3 |
| 33112-KPB-003 | I1 | 88 | 4 |
| 33113-MBW-D21 | I1 | 88 | 5 |
| | I2 | 89 | 18 |
| 33113-MEE-D01 | I1 | 88 | 5 |
| 33130-MAT-611 | I1 | 88 | 6 |
| 33140-MEL-640 | I1 | 88 | 7 |
| 33181-MEL-000 | I1 | 88 | 8 |
| 33184-MEL-000 | I1 | 88 | 9 |
| 33301-SA0-741 | I1 | 88 | 10 |
| | M1 | 152 | 2 |
| | M3 | 154 | 1 |
| 33400-MEL-D20 | M6 | 157 | 1 |
| 33401-MEJ-900 | M6 | 157 | 2 |
| 33402-MEJ-900 | M6 | 157 | 3 |
| 33403-MEL-640 | M5 | 156 | 1 |
| 33403-MEL-700 | M5 | 156 | 1 |
| 33403-MEL-D20 | M6 | 157 | 4 |
| 33409-MBW-000 | M5 | 156 | 2 |
| 33409-MEL-000 | M5 | 156 | 3 |
| 33450-MEL-D20 | M6 | 157 | 5 |
| 33451-MEJ-900 | M6 | 157 | 6 |
| 33452-MEJ-900 | M6 | 157 | 7 |
| 33453-MEL-640 | M5 | 156 | 4 |
| 33453-MEL-700 | M5 | 156 | 4 |
| 33453-MEL-D20 | M6 | 157 | 8 |
| 33600-MEL-D20 | M6 | 157 | 9 |
| 33602-MAT-E21 | M5 | 156 | 5 |
| 33603-MEL-640 | M5 | 156 | 6 |
| 33603-MEL-D20 | M6 | 157 | 10 |
| 33607-MAT-E21 | M5 | 156 | 7 |
| | M6 | 157 | 11 |
| 33611-MEE-D00 | M6 | 157 | 12 |
| 33611-MEL-D20 | M6 | 157 | 13 |
| 33612-MEE-D00 | M6 | 157 | 14 |
| 33612-MEL-D20 | M6 | 157 | 15 |
| 33650-MEL-D20 | M6 | 157 | 16 |
| 33652-MAT-E21 | M5 | 156 | 8 |
| 33653-MEL-640 | M5 | 156 | 9 |
| 33653-MEL-D20 | M6 | 157 | 17 |
| 33691-MEE-D00 | M7 | 158 | 24 |
| 33691-MEL-D20 | M7 | 158 | 23 |
| 33701-MEL-640 | M8 | 159 | 2 |
| 33701-MEL-D21 | M8 | 159 | 2 |
| 33712-GC6-000 | L10 | 145 | 28 |
| 33712-KT1-670 | M1 | 152 | 3 |
| | M2 | 153 | 35 |
| | | | 36 |
| 33715-MEE-000 | M8 | 159 | 3 |


4

# PART NO. INDEX




| Part Number | Address | Page | Ref. |
|---|---|---|---|
| 33719-437-970 | M1 | 152 | 4 |
| 33720-MEL-000 | M2 | 153 | 33 |
| 33720-MEL-D20 | M3 | 154 | 2 |
| 33721-MEE-003 | M1 | 152 | 5 |
| | M3 | 154 | 3 |
| 33721-MEL-000 | M1 | 152 | 5 |
| 33722-MEL-000 | M1 | 152 | 6 |
| 33722-MEL-D20 | M3 | 154 | 4 |
| 33723-MEE-003 | M1 | 152 | 7 |
| | M3 | 154 | 5 |
| 33723-MEL-000 | M1 | 152 | 7 |
| 33729-MEE-003 | M2 | 153 | 37 |
| | M4 | 155 | 29 |
| 33731-MJ0-940 | M3 | 154 | 6 |
| 33741-MZ7-003 | M1 | 152 | 8 |
| | M3 | 154 | 7 |
| 34000 | | | |
| 34901-MAT-611 | I1 | 88 | 11 |
| 34905-MAS-601 | M5 | 156 | 10 |
| 34905-MEJ-671 | M6 | 157 | 18 |
| 35000 | | | |
| 35010-MEL-640 | I11 | 98 | 5 |
| 35010-MEL-670 | I11 | 98 | 5 |
| 35010-MEL-A20 | I11 | 98 | 5 |
| 35010-MEL-D20 | I11 | 98 | 5 |
| 35070-MEL-000 | L11 | 146 | 1 |
| 35070-MEL-010 | L11 | 146 | 1 |
| 35070-MEL-305 | L11 | 146 | 1 |
| 35100-MEL-641 | I12 | 99 | 6 |
| 35100-MEL-670 | I12 | 99 | 6 |
| 35100-MEL-671 | I12 | 99 | 6 |
| 35100-MEL-A20 | I12 | 99 | 6 |
| 35100-MEL-D20 | I12 | 99 | 6 |
| 35101-MEL-641 | I12 | 99 | 7 |
| 35101-MEL-670 | I12 | 99 | 7 |
| 35106-MAT-A00 | I12 | 99 | 8 |
| 35113-MBW-601 | I12 | 99 | 9 |
| 35121-MAS-G01 | I12 | 99 | 10 |
| 35121-MBW-601 | I12 | 99 | 11 |
| 35130-MEL-003 | I5 | 92 | 3 |
| 35130-MEL-J00 | I5 | 92 | 3 |
| 35161-MEL-003 | M13 | 164 | 10 |
| | M15 | 166 | 11 |
| 35162-MN5-003 | M13 | 164 | 11 |
| | M16 | 167 | 12 |
| 35163-MN5-003 | M14 | 165 | 12 |
| | M16 | 167 | 13 |
| 35200-MEL-640 | I5 | 92 | 4 |
| 35200-MEL-670 | I5 | 92 | 4 |
| 35200-MEL-D21 | I5 | 92 | 4 |
| 35330-MB0-003 | I9 | 96 | 11 |
| 35340-MEL-003 | I6 | 93 | 1 |
| 35350-MEL-000 | L8 | 143 | 4 |
| 35350-MEL-D20 | L8 | 143 | 4 |
| 35357-KY1-000 | L8 | 143 | 5 |

| Part Number | Address | Page | Ref. |
|---|---|---|---|
| 35600-HA0-003 | G5 | 71 | 13 |
| 35701-MG9-950 | M11 | 162 | 23 |
| 35850-MR5-007 | M9 | 160 | 8 |
| | M10 | 161 | 7 |
| 35856-KBH-000 | M10 | 161 | 8 |
| 35856-MBG-003 | M9 | 160 | 9 |
| 36000 | | | |
| 36138-PR7-A01 | K10 | 129 | 12 |
| | K15 | 134 | 15 |
| 36140-MEL-D21 | F3 | 53 | 25 |
| 36163-PV0-004 | K10 | 129 | 13 |
| | K15 | 134 | 16 |
| 36172-MCA-A61 | L1 | 136 | 7 |
| 36191-KV3-700 | J16 | 119 | 22 |
| 36450-MEL-640 | K12 | 131 | 7 |
| 36450-MEL-D20 | L1 | 136 | 8 |
| 36531-MEL-611 | L3 | 138 | 27 |
| 36531-MEL-D21 | L6 | 141 | 26 |
| 36625-P0A-A01 | K10 | 129 | 14 |
| | K15 | 134 | 17 |
| 37000 | | | |
| 37100-MEL-601 | I3 | 90 | 1 |
| 37100-MEL-631 | I3 | 90 | 1 |
| 37100-MEL-641 | I3 | 90 | 1 |
| 37100-MEL-D00 | I3 | 90 | 1 |
| 37100-MEL-D21 | I3 | 90 | 1 |
| 37100-MEL-E22 | I3 | 90 | 1 |
| 37100-MEL-F21 | I3 | 90 | 1 |
| 37100-MEL-M21 | I3 | 90 | 1 |
| 37110-MEL-600 | I3 | 90 | 2 |
| 37110-MEL-630 | I3 | 90 | 2 |
| 37110-MEL-640 | I3 | 90 | 2 |
| 37110-MEL-D00 | I3 | 90 | 2 |
| 37110-MEL-D21 | I3 | 90 | 2 |
| 37110-MEL-E22 | I3 | 90 | 2 |
| 37110-MEL-F21 | I3 | 90 | 2 |
| 37110-MEL-M21 | I3 | 90 | 2 |
| 37111-MEE-641 | I3 | 90 | 3 |
| 37111-MEL-600 | I3 | 90 | 3 |
| 37130-MEL-600 | I3 | 90 | 4 |
| 37130-MEL-640 | I3 | 90 | 4 |
| 37240-P13-013 | G5 | 71 | 14 |
| 37244-MM4-000 | I3 | 90 | 5 |
| 37610-MEL-600 | I3 | 90 | 6 |
| 37610-MEL-640 | I3 | 90 | 6 |
| 37700-MEL-000 | G5 | 71 | 15 |
| 37700-MEL-D21 | G5 | 71 | 15 |
| 37830-MEL-003 | H2 | 84 | 17 |
| 37870-KRJ-901 | G16 | 82 | 18 |
| 37870-MBG-003 | G16 | 82 | 18 |
| 37880-P05-A00 | K8 | 127 | 18 |
| | K13 | 132 | 18 |

| Part Number | Address | Page | Ref. |
|---|---|---|---|
| 38000 | | | |
| 38110-MBB-000 | I15 | 102 | 1 |
| 38301-MBW-D21 | M14 | 165 | 13 |
| | M16 | 167 | 14 |
| 38301-MEW-921 | M16 | 167 | 14 |
| 38306-GE7-000 | M14 | 165 | 14 |
| | M16 | 167 | 15 |
| 38501-MEL-000 | M14 | 165 | 15 |
| | M16 | 167 | 16 |
| 38501-MEL-003 | M14 | 165 | 15 |
| 38770-MEL-613 | M14 | 165 | 16 |
| 38770-MEL-622 | M14 | 165 | 16 |
| 38770-MEL-631 | M14 | 165 | 16 |
| 38770-MEL-643 | M14 | 165 | 16 |
| 38770-MEL-661 | M14 | 165 | 16 |
| 38770-MEL-B21 | M16 | 167 | 17 |
| 38770-MEL-D01 | M14 | 165 | 16 |
| 38770-MEL-D21 | M16 | 167 | 17 |
| 38770-MEL-F21 | M16 | 167 | 17 |
| 38770-MEL-K21 | M16 | 167 | 17 |
| 38770-MEL-M01 | M14 | 165 | 16 |
| 38770-MEL-M22 | M16 | 167 | 17 |
| 38770-MEL-M23 | M16 | 167 | 17 |
| 38774-MEL-000 | K10 | 129 | 15 |
| 38774-MEL-D00 | K10 | 129 | 15 |
| 38776-MEL-000 | M14 | 165 | 17 |
| 40000 | | | |
| 40510-MEL-000 | L12 | 147 | 3 |
| 40514-310-000 | M3 | 154 | 8 |
| 40520-MEL-000 | L12 | 147 | 4 |
| 40541-MEL-D41 | L12 | 147 | 5 |
| 40541-MEL-D42 | L12 | 147 | 5 |
| 40545-MEL-003 | L12 | 147 | 5 |
| 40545-MEL-005 | L12 | 147 | 5 |
| 41000 | | | |
| 41201-MEL-000 | J11 | 114 | 2 |
| 41201-MEL-D20 | J11 | 114 | 2 |
| 42000 | | | |
| 42301-MEL-000 | J11 | 114 | 3 |
| 42305-MEL-000 | L12 | 147 | 6 |
| 42305-MEL-D20 | L12 | 147 | 6 |
| 42306-MEE-D00 | L13 | 148 | 7 |
| 42306-MEL-000 | L12 | 147 | 7 |
| 42311-MCJ-750 | J11 | 114 | 4 |
| 42312-MEL-000 | J11 | 114 | 5 |
| 42615-MEL-000 | J11 | 114 | 6 |
| 42620-MEL-000 | J11 | 114 | 7 |
| 42625-MEL-000 | J11 | 114 | 8 |
| 42650-MEL-010ZA | J11 | 114 | 9 |
| 42650-MEL-D10ZA | J11 | 114 | 9 |
| 42650-MEL-D20ZB | J11 | 114 | 9 |
| 42650-MEL-D20ZC | J11 | 114 | 9 |

| Part Number | Address | Page | Ref. |
|---|---|---|---|
| 42650-MEL-D40 | J11 | 114 | 9 |
| 42704-MER-D00 | J5 | 108 | 1 |
| | J11 | 114 | 10 |
| 42705-MER-D00 | J5 | 108 | 1 |
| | J11 | 114 | 10 |
| 42706-MER-D00 | J5 | 108 | 1 |
| | J11 | 114 | 10 |
| 42711-MEL-008 | J11 | 114 | 11 |
| 42711-MEL-013 | J12 | 115 | 11 |
| 42711-MEL-D21 | J12 | 115 | 11 |
| 42753-MCF-008 | J5 | 108 | 2 |
| | J12 | 115 | 12 |
| 42753-ML7-003 | J5 | 108 | 2 |
| | J12 | 115 | 12 |
| 43000 | | | |
| 43105-MW0-405 | J9 | 112 | 2 |
| 43107-MCJ-006 | J9 | 112 | 3 |
| 43107-MEL-D21 | J10 | 113 | 3 |
| 43108-MBB-006 | J9 | 112 | 4 |
| 43108-MEL-D21 | J10 | 113 | 4 |
| 43110-MEL-006 | J9 | 112 | 5 |
| 43112-MCF-006 | J9 | 112 | 6 |
| 43112-MEL-D21 | J10 | 113 | 5 |
| 43131-KW3-006 | J9 | 112 | 7 |
| | J10 | 113 | 6 |
| 43132-KFG-J21 | J9 | 112 | 8 |
| 43150-MEL-006 | J9 | 112 | 9 |
| 43150-MEL-D21 | J10 | 113 | 7 |
| 43150-MEL-D31 | J10 | 113 | 7 |
| 43150-MEL-D41 | J10 | 113 | 7 |
| 43190-MEL-D21 | J10 | 113 | 8 |
| 43190-MEL-D31 | J10 | 113 | 8 |
| 43215-KZ4-J41 | J9 | 112 | 10 |
| | J10 | 113 | 9 |
| 43251-MEE-000 | J12 | 115 | 13 |
| 43310-MEL-014 | J7 | 110 | 1 |
| 43310-MEL-D21 | J7 | 110 | 1 |
| 43352-568-003 | I6 | 93 | 2 |
| | J9 | 112 | 11 |
| | J10 | 113 | 10 |
| 43353-461-771 | F16 | 66 | 18 |
| | I6 | 93 | 3 |
| | J9 | 112 | 12 |
| | J10 | 113 | 11 |
| 43469-MEL-000 | J7 | 110 | 2 |
| 43503-MER-D01 | J7 | 110 | 3 |
| 43504-MB2-006 | J7 | 110 | 4 |
| 43510-MEL-006 | J7 | 110 | 5 |
| 43510-MEL-D21 | J7 | 110 | 5 |
| 43511-KV3-831 | J7 | 110 | 6 |
| 43512-MEL-006 | J7 | 110 | 7 |
| 43514-KS6-701 | I6 | 93 | 4 |
| | J7 | 110 | 8 |
| 43516-MCJ-006 | I6 | 93 | 5 |
| 43517-KS6-701 | I6 | 93 | 6 |
| 43520-MB2-305 | J7 | 110 | 9 |
| 43520-MG9-305 | J7 | 110 | 9 |

| Part Number | Address | Page | Ref. |
|---|---|---|---|
| 43523-MAH-671 | I6 | 93 | 7 |
| 43530-MCZ-006 | J7 | 110 | 10 |
| 44000 | | | |
| 44301-MCJ-000 | J5 | 108 | 3 |
| 44311-MCJ-750 | J5 | 108 | 4 |
| 44311-MEL-D20 | J5 | 108 | 4 |
| 44312-MCJ-750 | J5 | 108 | 5 |
| 44620-MCJ-000 | J5 | 108 | 6 |
| 44650-MEL-010ZA | J5 | 108 | 7 |
| 44650-MEL-D10ZA | J5 | 108 | 7 |
| 44650-MEL-D20ZB | J5 | 108 | 7 |
| 44650-MEL-D20ZC | J5 | 108 | 7 |
| 44650-MEL-D40 | J5 | 108 | 7 |
| 44711-MEL-003 | J5 | 108 | 8 |
| 44711-MEL-008 | J6 | 109 | 8 |
| 44711-MEL-D21 | J6 | 109 | 8 |
| 44711-MEL-D22 | J6 | 109 | 8 |
| 45000 | | | |
| 45103-MEL-003 | J3 | 106 | 4 |
| 45106-MEL-003 | J3 | 106 | 5 |
| 45107-MEL-003 | J3 | 106 | 6 |
| 45111-MA3-006 | J9 | 112 | 14 |
| 45111-MAJ-G41 | J9 | 112 | 13 |
| | J10 | 113 | 12 |
| 45111-MEL-003 | J3 | 106 | 7 |
| 45111-MEL-013 | J3 | 106 | 7 |
| 45112-MEL-003 | J3 | 106 | 8 |
| 45117-MEL-003 | J3 | 106 | 9 |
| 45120-MEL-003 | J6 | 109 | 9 |
| 45120-MEL-D21 | J6 | 109 | 9 |
| 45120-MEL-D31 | J6 | 109 | 9 |
| 45120-MEL-D41 | J6 | 109 | 9 |
| 45125-MEL-003 | I6 | 93 | 8 |
| 45132-166-016 | J10 | 113 | 13 |
| 45133-MA3-006 | J9 | 112 | 15 |
| | J10 | 113 | 14 |
| 45146-300-000 | N2 | 169 | 16 |
| 45146-MEL-D00 | N2 | 169 | 16 |
| 45150-MEL-003 | J3 | 106 | 10 |
| 45150-MEL-013 | J3 | 106 | 10 |
| 45150-MEL-023 | J3 | 106 | 10 |
| 45150-MEL-D41 | J3 | 106 | 10 |
| 45158-MEL-000 | I6 | 93 | 9 |
| 45159-MEL-000 | I6 | 93 | 10 |
| 45215-MEL-003 | J4 | 107 | 11 |
| 45215-MEL-013 | J4 | 107 | 11 |
| 45220-MEL-003 | J6 | 109 | 10 |
| 45220-MEL-D21 | J6 | 109 | 10 |
| 45220-MEL-D31 | J6 | 109 | 10 |
| 45220-MEL-D41 | J6 | 109 | 10 |
| 45250-MEL-003 | J4 | 107 | 12 |
| 45250-MEL-013 | J4 | 107 | 12 |
| 45250-MEL-023 | J4 | 107 | 12 |
| 45250-MEL-D41 | J4 | 107 | 12 |
| 45503-KV3-006 | I6 | 93 | 11 |

# PART NO. INDEX




| Part Number | Address | Page | Ref. |
|---|---|---|---|
| 45504-MAT-E01 | I9 | 96 | 12 |
| 45504-MCF-006 | I6 | 93 | 12 |
| 45505-KV3-006 | I6 | 93 | 13 |
| 45510-MEL-006 | I6 | 93 | 14 |
| 45510-MEL-D21 | I6 | 93 | 14 |
| 45511-KV3-016 | I6 | 93 | 15 |
| 45511-MEL-D21 | I7 | 94 | 43 |
| 45512-MEL-006 | I6 | 93 | 16 |
| 45513-KK1-771 | J7 | 110 | 11 |
| 45513-KV3-006 | I6 | 93 | 17 |
| 45513-MEL-D21 | I7 | 94 | 44 |
| 45517-MEL-006 | I6 | 93 | 18 |
| | I9 | 96 | 13 |
| 45518-KV3-006 | I6 | 93 | 19 |
| 45520-300-000 | I7 | 94 | 45 |
| 45520-KV3-006 | I6 | 93 | 20 |
| 45520-MG7-006 | J7 | 110 | 12 |
| 45521-HA2-006 | J7 | 110 | 13 |
| 45521-MJ6-006 | I8 | 95 | 46 |
| 45525-MEL-006 | I6 | 93 | 21 |
| 45530-MEL-006 | I6 | 93 | 22 |
| 45535-MR8-901 | I8 | 95 | 47 |
| | I9 | 96 | 14 |
| 45550-MEL-006 | I7 | 94 | 23 |
| **46000** | | | |
| 46140-MEL-006 | I7 | 94 | 24 |
| 46182-500-013 | J7 | 110 | 14 |
| 46500-MEL-000 | L8 | 143 | 6 |
| 46505-MCJ-751 | J7 | 110 | 15 |
| 46506-MCJ-750 | J7 | 110 | 16 |
| 46515-MV9-000 | L8 | 143 | 7 |
| **50000** | | | |
| 50010-MEL-000ZA | N1 | 168 | 2 |
| 50010-MEL-010ZA | N1 | 168 | 2 |
| 50010-MEL-670ZA | N1 | 168 | 2 |
| 50010-MEL-671ZA | N1 | 168 | 2 |
| 50010-MEL-B20ZA | N1 | 168 | 2 |
| 50010-MEL-B30ZA | N1 | 168 | 2 |
| 50010-MEL-D20ZA | N1 | 168 | 2 |
| 50010-MEL-D30ZA | N1 | 168 | 2 |
| 50120-MEL-000 | I14 | 101 | 3 |
| 50131-MEL-300 | N1 | 168 | 3 |
| 50132-MEL-300 | N1 | 168 | 4 |
| 50133-MEL-300 | N1 | 168 | 5 |
| | N13 | 180 | 1 |
| | 2-B2 | 185 | 1 |
| | 2-B7 | 190 | 1 |
| 50134-MEL-300 | N1 | 168 | 6 |
| 50135-MEL-300 | N1 | 168 | 7 |
| 50141-MEL-000 | N1 | 168 | 8 |
| 50150-MEL-000 | L11 | 146 | 2 |
| 50150-MEL-010 | L11 | 146 | 2 |
| 50191-MEL-000 | N1 | 168 | 9 |
| 50192-MEL-000 | N1 | 168 | 10 |
| 50193-MEL-000 | N1 | 168 | 9 |

| Part Number | Address | Page | Ref. |
|---|---|---|---|
| | N2 | 169 | 11 |
| 50200-MEL-010ZA | N2 | 169 | 12 |
| 50200-MEL-D20ZA | N2 | 169 | 12 |
| 50204-MEL-000 | N2 | 169 | 13 |
| 50214-MEL-000 | N2 | 169 | 14 |
| 50324-425-010 | I7 | 94 | 25 |
| | L3 | 138 | 28 |
| | L6 | 141 | 27 |
| | M11 | 162 | 15 |
| 50352-GS6-000 | N2 | 169 | 15 |
| 50530-MEL-000 | L11 | 146 | 3 |
| 50540-MBB-000 | L11 | 146 | 4 |
| 50600-MEL-000 | L9 | 144 | 2 |
| 50600-MEL-D20 | L9 | 144 | 2 |
| 50602-MEL-000 | L8 | 143 | 8 |
| 50607-MEL-000 | L9 | 144 | 3 |
| 50617-MCJ-750 | L9 | 144 | 4 |
| 50631-MEL-D20 | L10 | 145 | 29 |
| 50639-MLO-010 | L9 | 144 | 5 |
| 50644-MCJ-750 | L9 | 144 | 6 |
| 50660-MEL-000 | L9 | 144 | 7 |
| 50665-MEL-000 | L9 | 144 | 8 |
| 50700-MEL-000 | L9 | 144 | 9 |
| 50707-MCJ-000 | L9 | 144 | 10 |
| 50718-KT7-761 | L9 | 144 | 11 |
| 50718-MEE-D00 | L9 | 144 | 11 |
| 50720-MEL-010 | L9 | 144 | 12 |
| 50720-MEL-D00 | L9 | 144 | 12 |
| 50730-MEL-010 | L9 | 144 | 13 |
| 50730-MEL-D00 | L9 | 144 | 13 |
| 50750-MEL-000 | L9 | 144 | 14 |
| 50760-MEL-000 | L9 | 144 | 15 |
| 50951-MEL-000 | J13 | 116 | 1 |
| 50952-MEL-000 | J13 | 116 | 2 |
| 50953-MEL-300 | J13 | 116 | 3 |
| **51000** | | | |
| 51400-MEL-003 | J1 | 104 | 1 |
| 51400-MEL-D21 | J1 | 104 | 1 |
| 51400-MEL-D41 | J1 | 104 | 1 |
| 51400-MEL-E21 | J1 | 104 | 1 |
| 51400-MEL-E41 | J1 | 104 | 1 |
| 51401-MEL-003 | J1 | 104 | 2 |
| 51401-MEL-D21 | J1 | 104 | 2 |
| 51403-MCF-003 | J1 | 104 | 3 |
| 51406-MW4-003 | J1 | 104 | 4 |
| 51410-MEL-003 | J1 | 104 | 5 |
| 51410-MEL-D41 | J1 | 104 | 5 |
| 51412-MEL-003 | J1 | 104 | 6 |
| 51414-MAZ-003 | J1 | 104 | 7 |
| 51415-MAZ-003 | J1 | 104 | 8 |
| 51423-MCJ-751 | J1 | 104 | 9 |
| 51425-MEL-003 | J1 | 104 | 10 |
| 51425-MEL-D21 | J1 | 104 | 10 |
| 51425-MEL-E21 | J1 | 104 | 10 |
| 51430-MEL-003 | J1 | 104 | 11 |
| 51430-MEL-D21 | J1 | 104 | 11 |
| 51447-KA4-711 | J1 | 104 | 12 |

| Part Number | Address | Page | Ref. |
|---|---|---|---|
| 51450-MEL-003 | J1 | 104 | 13 |
| 51451-MEL-003 | J1 | 104 | 14 |
| 51453-MCJ-751 | J1 | 104 | 15 |
| 51455-MW4-003 | J1 | 104 | 16 |
| 51456-MCJ-751 | J2 | 105 | 17 |
| 51486-MEL-000 | L9 | 144 | 16 |
| 51490-MEJ-003 | J2 | 105 | 18 |
| 51496-MCJ-751 | J2 | 105 | 19 |
| 51497-MEL-000 | J4 | 107 | 13 |
| 51497-MEL-D20 | J4 | 107 | 16 |
| 51500-MEL-003 | J2 | 105 | 20 |
| 51500-MEL-D21 | J2 | 105 | 20 |
| 51500-MEL-D41 | J2 | 105 | 20 |
| 51500-MEL-E21 | J2 | 105 | 20 |
| 51500-MEL-E41 | J2 | 105 | 20 |
| 51525-MEL-003 | J2 | 105 | 21 |
| 51525-MEL-D21 | J2 | 105 | 21 |
| 51525-MEL-E21 | J2 | 105 | 21 |
| **52000** | | | |
| 52101-MEL-000 | L13 | 148 | 8 |
| 52101-MEL-670 | L13 | 148 | 8 |
| 52102-MEL-000 | L13 | 148 | 9 |
| 52108-MEL-000 | L13 | 148 | 10 |
| 52143-MEL-000 | L13 | 148 | 11 |
| 52144-MEL-000 | L13 | 148 | 12 |
| 52159-KB7-000 | M1 | 152 | 20 |
| 52170-MEL-000 | L13 | 148 | 13 |
| 52200-MEL-000 | L13 | 148 | 14 |
| 52200-MEL-A20 | L13 | 148 | 14 |
| 52200-MEL-D21 | L13 | 148 | 14 |
| 52200-MEL-D30 | L13 | 148 | 14 |
| 52200-MEL-D40 | L13 | 148 | 14 |
| 52400-MEL-003 | L15 | 150 | 1 |
| 52400-MEL-751 | L15 | 150 | 1 |
| 52400-MEL-D21 | L15 | 150 | 1 |
| 52400-MEL-D41 | L15 | 150 | 1 |
| 52400-MEL-K21 | L15 | 150 | 1 |
| 52442-KA3-711 | J2 | 105 | 22 |
| 52463-KZ4-B00 | L15 | 150 | 2 |
| 52463-MEE-000 | L15 | 150 | 3 |
| 52464-MEE-000 | L15 | 150 | 4 |
| 52465-MEL-000 | L15 | 150 | 5 |
| 52465-MEL-D20 | L15 | 150 | 5 |
| 52466-MEE-000 | L15 | 150 | 6 |
| 52467-MEE-000 | L15 | 150 | 7 |
| 52472-MEL-000 | L15 | 150 | 8 |
| 52475-MEL-000 | L15 | 150 | 9 |
| 52475-MEL-D20 | L15 | 150 | 9 |
| 52487-KA4-831 | L15 | 150 | 10 |
| 52497-MEE-003 | J2 | 105 | 31 |
| | L16 | 151 | 24 |
| **53000** | | | |
| 53100-MEL-000 | I12 | 99 | 12 |
| 53100-MEL-D00 | I12 | 99 | 12 |
| 53105-KV3-000 | I12 | 99 | 14 |

| Part Number | Address | Page | Ref. |
|---|---|---|---|
| 53105-MEE-940 | I12 | 99 | 13 |
| 53107-KM9-000 | I12 | 99 | 15 |
| 53107-MEL-D20 | I12 | 99 | 15 |
| 53108-KAZ-000 | I12 | 99 | 16 |
| 53108-MJ0-000 | I12 | 99 | 16 |
| 53109-MEE-000 | I12 | 99 | 17 |
| 53109-MV4-000 | I12 | 99 | 18 |
| 53140-MCF-000 | I5 | 92 | 5 |
| 53150-MEL-000 | I12 | 99 | 19 |
| 53150-MEL-D00 | I12 | 99 | 19 |
| 53165-MY9-890 | I5 | 92 | 6 |
| 53166-MY9-890 | I5 | 92 | 7 |
| 53167-MV4-000 | I5 | 92 | 8 |
| 53168-MV4-000 | I5 | 92 | 9 |
| 53170-MEL-006 | I7 | 94 | 26 |
| 53174-GS9-610 | I12 | 99 | 20 |
| 53180-MEJ-006 | I9 | 96 | 15 |
| 53214-371-010 | I15 | 102 | 3 |
| 53214-KA4-701 | I15 | 102 | 2 |
| 53214-MCJ-751 | I15 | 102 | 2 |
| 53215-MEE-D00 | I13 | 100 | 29 |
| 53219-MEL-000 | I15 | 102 | 4 |
| 53219-MEL-D20 | I15 | 102 | 4 |
| 53220-MCJ-D10 | I15 | 102 | 5 |
| 53230-MEL-000 | I13 | 100 | 21 |
| 53700-MEL-003 | I14 | 101 | 4 |
| 53700-MEL-013 | I14 | 101 | 4 |
| 53700-MEL-023 | I14 | 101 | 4 |
| 53702-MCJ-751 | J2 | 105 | 23 |
| 53731-MEL-003 | I14 | 101 | 5 |
| 53731-MEL-013 | I14 | 101 | 5 |
| 53740-MEL-000 | I14 | 101 | 6 |
| 53741-MEL-000 | I14 | 101 | 7 |
| **61000** | | | |
| 61100-MEL-000ZA | I16 | 103 | 1 |
| 61100-MEL-000ZB | I16 | 103 | 1 |
| 61100-MEL-000ZC | I16 | 103 | 1 |
| 61100-MEL-000ZD | I16 | 103 | 1 |
| 61100-MEL-000ZE | I16 | 103 | 1 |
| 61100-MEL-D20ZA | I16 | 103 | 1 |
| 61100-MEL-D20ZB | I16 | 103 | 1 |
| 61100-MEL-D20ZC | I16 | 103 | 1 |
| 61100-MEL-D20ZD | I16 | 103 | 1 |
| 61100-MEL-D20ZF | I16 | 103 | 1 |
| 61101-MK4-620 | M8 | 159 | 4 |
| 61110-MEL-D10ZA | I16 | 103 | 5 |
| 61111-MEL-D10ZA | 2-C3 | 202 | 1 |
| 61403-MEL-000 | I15 | 102 | 6 |
| 61703-HB3-300 | M1 | 152 | 9 |
| **64000** | | | |
| 64100-MEL-A20ZA | N11 | 178 | 1 |
| 64100-MEL-A20ZB | N11 | 178 | 2 |
| 64100-MEL-A20ZC | N11 | 178 | 2 |
| 64100-MEL-A20ZF | N11 | 178 | 2 |
| 64100-MEL-A30ZA | N11 | 178 | 2 |

| Part Number | Address | Page | Ref. |
|---|---|---|---|
| 64100-MEL-A30ZB | N11 | 178 | 2 |
| 64100-MEL-A30ZD | N11 | 178 | 1 |
| 64100-MEL-D10ZA | N10 | 177 | 17 |
| 64100-MEL-D20ZC | N11 | 178 | 1 |
| 64100-MEL-D20ZD | N11 | 178 | 3 |
| 64100-MEL-D20ZE | N11 | 178 | 3 |
| 64100-MEL-D30ZA | N11 | 178 | 3 |
| 64100-MEL-D30ZB | N11 | 178 | 3 |
| 64100-MEL-D40ZA | N11 | 178 | 3 |
| 64101-MEL-A20ZA | 2-C9 | 208 | 1 |
| 64101-MEL-D20ZA | 2-C6 | 205 | 1 |
| | 2-C9 | 208 | 1 |
| 64101-MEL-D20ZB | 2-C6 | 205 | 1 |
| | 2-C9 | 208 | 1 |
| 64101-MEL-D30ZA | 2-C6 | 205 | 1 |
| | 2-C9 | 208 | 1 |
| 64101-MEL-D30ZB | 2-C6 | 205 | 1 |
| | 2-C9 | 208 | 1 |
| 64101-MEL-D40ZA | 2-C12 | 211 | 1 |
| 64102-MEL-A20ZA | 2-C9 | 208 | 2 |
| 64102-MEL-A20ZB | 2-C9 | 208 | 2 |
| 64102-MEL-A20ZC | 2-C9 | 208 | 2 |
| 64102-MEL-A30ZA | 2-C9 | 208 | 2 |
| 64102-MEL-A30ZB | 2-C9 | 208 | 2 |
| 64103-MEL-A20ZA | 2-C9 | 208 | 3 |
| 64103-MEL-A20ZB | 2-C9 | 208 | 3 |
| 64103-MEL-A20ZC | 2-C9 | 208 | 3 |
| 64103-MEL-A30ZA | 2-C9 | 208 | 3 |
| 64103-MEL-A30ZB | 2-C9 | 208 | 3 |
| 64121-MBG-000 | N13 | 180 | 2 |
| 64121-MEJ-000 | N9 | 176 | 1 |
| 64121-MEL-000 | K4 | 123 | 1 |
| | K6 | 125 | 1 |
| 64205-166-610 | N9 | 176 | 2 |
| | N11 | 178 | 4 |
| 64211-MEL-000ZA | N9 | 176 | 3 |
| 64211-MEL-000ZB | N9 | 176 | 3 |
| 64211-MEL-000ZC | N9 | 176 | 3 |
| 64211-MEL-D00ZA | N9 | 176 | 3 |
| 64211-MEL-D00ZB | N9 | 176 | 3 |
| 64211-MEL-D00ZC | N9 | 176 | 3 |
| 64211-MEL-D00ZD | N9 | 176 | 3 |
| 64230-MEL-000 | N9 | 176 | 4 |
| 64230-MEL-D20 | N11 | 178 | 5 |
| 64240-MEL-000 | N9 | 176 | 5 |
| 64240-MEL-D20 | N11 | 178 | 6 |
| 64243-MEL-D40ZA | 2-C12 | 211 | 2 |
| 64244-MEL-D40ZA | 2-C12 | 211 | 3 |
| 64250-MCA-J40 | J14 | 117 | 19 |
| 64250-MEL-000ZA | N9 | 176 | 6 |
| | N11 | 178 | 7 |
| 64250-MEL-D10ZA | N9 | 176 | 6 |
| 64250-MEL-D40ZA | N11 | 178 | 7 |
| 64300-MEL-000ZG | N13 | 180 | 3 |
| 64300-MEL-000ZH | N13 | 180 | 3 |
| 64300-MEL-000ZJ | N13 | 180 | 3 |
| 64300-MEL-010ZG | N13 | 180 | 3 |
| 64300-MEL-010ZH | N13 | 180 | 3 |
| 64300-MEL-010ZJ | N13 | 180 | 3 |

# PART NO. INDEX



| Part Number | Address | Page | Ref. |
|---|---|---|---|
| 64300-MEL-020ZG | N14 | 181 | 3 |
| 64300-MEL-020ZH | N14 | 181 | 3 |
| 64300-MEL-020ZJ | N14 | 181 | 3 |
| 64300-MEL-030ZG | N14 | 181 | 3 |
| 64300-MEL-030ZH | N14 | 181 | 3 |
| 64300-MEL-030ZJ | N14 | 181 | 3 |
| 64300-MEL-671ZA | N14 | 181 | 4 |
| 64300-MEL-671ZD | N14 | 181 | 4 |
| 64300-MEL-671ZE | N15 | 182 | 4 |
| 64300-MEL-672ZA | N15 | 182 | 4 |
| 64300-MEL-672ZD | N15 | 182 | 4 |
| 64300-MEL-672ZE | N15 | 182 | 4 |
| 64300-MEL-A01ZA | N15 | 182 | 4 |
| 64300-MEL-A01ZD | N15 | 182 | 4 |
| 64300-MEL-A01ZE | N15 | 182 | 4 |
| 64300-MEL-A20ZA | 2-B2 | 185 | 2 |
| 64300-MEL-A20ZB | 2-B2 | 185 | 2 |
| 64300-MEL-A20ZC | 2-B2 | 185 | 2 |
| 64300-MEL-A20ZD | 2-B2 | 185 | 2 |
| 64300-MEL-A30ZA | 2-B2 | 185 | 2 |
| 64300-MEL-A30ZB | 2-B2 | 185 | 2 |
| 64300-MEL-A30ZD | 2-B2 | 185 | 2 |
| 64300-MEL-B30ZA | 2-B2 | 185 | 2 |
| 64300-MEL-B30ZB | 2-B2 | 185 | 2 |
| 64300-MEL-D00ZA | N14 | 181 | 3 |
| 64300-MEL-D00ZB | N14 | 181 | 3 |
| 64300-MEL-D00ZD | N14 | 181 | 3 |
| 64300-MEL-D10ZB | N14 | 181 | 3 |
| 64300-MEL-D11ZB | N14 | 181 | 3 |
| 64300-MEL-D20ZA | 2-B2 | 185 | 2 |
| 64300-MEL-D20ZB | 2-B2 | 185 | 2 |
| 64300-MEL-D20ZC | 2-B2 | 185 | 2 |
| 64300-MEL-D30ZA | 2-B2 | 185 | 2 |
| 64300-MEL-D30ZB | 2-B2 | 185 | 2 |
| 64300-MEL-D40ZA | 2-B3 | 186 | 2 |
| 64300-MEL-U00ZA | N14 | 181 | 3 |
| 64300-MEL-U00ZD | N14 | 181 | 3 |
| 64300-MEL-U00ZE | N14 | 181 | 3 |
| 64300-MEL-U01ZA | N14 | 181 | 3 |
| 64300-MEL-U01ZD | N14 | 181 | 3 |
| 64300-MEL-U01ZE | N14 | 181 | 3 |
| 64300-MEL-U10ZA | N14 | 181 | 3 |
| 64311-MEL-300 | N13 | 180 | 2 |
| 64325-MEL-000 | 2-B5 | 188 | 1 |
| 64325-MEL-010 | 2-B5 | 188 | 1 |
| 64325-MEL-D20 | 2-B7 | 190 | 2 |
| 64326-MEL-300 | 2-B5 | 188 | 2 |
| 64350-MEL-000ZG | N15 | 182 | 5 |
| 64350-MEL-000ZH | N15 | 182 | 5 |
| 64350-MEL-000ZJ | N15 | 182 | 5 |
| 64350-MEL-010ZG | N15 | 182 | 5 |
| 64350-MEL-010ZH | N15 | 182 | 5 |
| 64350-MEL-010ZJ | N15 | 182 | 5 |
| 64350-MEL-020ZG | N15 | 182 | 5 |
| 64350-MEL-020ZH | N16 | 183 | 5 |
| 64350-MEL-020ZJ | N16 | 183 | 5 |
| 64350-MEL-670ZA | N16 | 183 | 6 |
| 64350-MEL-670ZD | N16 | 183 | 6 |
| 64350-MEL-670ZE | N16 | 183 | 6 |

| Part Number | Address | Page | Ref. |
|---|---|---|---|
| 64350-MEL-A00ZA | N16 | 183 | 6 |
| 64350-MEL-A00ZD | N16 | 183 | 6 |
| 64350-MEL-A00ZE | N16 | 183 | 6 |
| 64350-MEL-A20ZA | 2-B3 | 186 | 3 |
| 64350-MEL-A20ZB | 2-B3 | 186 | 3 |
| 64350-MEL-A20ZC | 2-B3 | 186 | 3 |
| 64350-MEL-A20ZD | 2-B3 | 186 | 3 |
| 64350-MEL-A30ZA | 2-B3 | 186 | 3 |
| 64350-MEL-A30ZB | 2-B3 | 186 | 3 |
| 64350-MEL-A30ZD | 2-B4 | 187 | 3 |
| 64350-MEL-B30ZA | 2-B4 | 187 | 3 |
| 64350-MEL-B30ZB | 2-B4 | 187 | 3 |
| 64350-MEL-D00ZA | N16 | 183 | 5 |
| 64350-MEL-D00ZB | N16 | 183 | 5 |
| 64350-MEL-D00ZD | N16 | 183 | 5 |
| 64350-MEL-D10ZB | N16 | 183 | 5 |
| 64350-MEL-D20ZA | 2-B3 | 186 | 3 |
| 64350-MEL-D20ZB | 2-B3 | 186 | 3 |
| 64350-MEL-D20ZC | 2-B3 | 186 | 3 |
| 64350-MEL-D30ZA | 2-B4 | 187 | 3 |
| 64350-MEL-D30ZB | 2-B4 | 187 | 3 |
| 64350-MEL-D40ZA | 2-B4 | 187 | 3 |
| 64350-MEL-U00ZA | N16 | 183 | 5 |
| 64350-MEL-U00ZD | N16 | 183 | 5 |
| 64350-MEL-U00ZE | N16 | 183 | 5 |
| 64350-MEL-U20ZA | 2-B3 | 186 | 3 |
| 64350-MEL-U20ZB | 2-B3 | 186 | 3 |
| 64350-MEL-U20ZC | 2-B3 | 186 | 3 |
| 64350-MEL-U20ZD | 2-B3 | 186 | 3 |
| 64375-MEL-000 | 2-B5 | 188 | 3 |
| 64375-MEL-010 | 2-B5 | 188 | 3 |
| 64375-MEL-D20 | 2-B7 | 190 | 3 |
| 64390-MEL-D20 | 2-B4 | 187 | 4 |
| 64391-MEL-670 | N16 | 183 | 8 |
| 64391-MEL-A00 | N16 | 183 | 8 |
| 64391-MEL-D20 | 2-B4 | 187 | 5 |
| 64392-MEL-670 | N16 | 183 | 9 |
| 64392-MEL-A00 | N16 | 183 | 9 |
| 64392-MEL-D20 | 2-B4 | 187 | 6 |
| 64393-MEL-670 | N16 | 183 | 10 |
| 64393-MEL-A00 | N16 | 183 | 10 |
| 64393-MEL-D20 | 2-B4 | 187 | 7 |
| 64394-MEL-670 | 2-B5 | 188 | 4 |
| 64394-MEL-A00 | 2-B5 | 188 | 4 |
| 64394-MEL-A20 | 2-B4 | 187 | 19 |
| 64395-MEL-670 | 2-B5 | 188 | 5 |
| 64395-MEL-A00 | 2-B5 | 188 | 5 |
| 64395-MEL-A20 | 2-B4 | 187 | 18 |
| 64396-MEL-670 | 2-B5 | 188 | 6 |
| 64396-MEL-A00 | 2-B5 | 188 | 6 |
| 64397-MEL-670 | 2-B5 | 188 | 7 |
| 64397-MEL-A00 | 2-B5 | 188 | 7 |
| 64398-MEL-670 | 2-B5 | 188 | 8 |
| 64398-MEL-A00 | 2-B5 | 188 | 8 |
| 64399-MEL-670 | 2-B5 | 188 | 9 |
| 64399-MEL-A00 | 2-B5 | 188 | 9 |
| 64400-MEL-010ZC | 2-B5 | 188 | 10 |
| 64400-MEL-010ZF | 2-B5 | 188 | 10 |
| 64400-MEL-010ZG | 2-B5 | 188 | 10 |

| Part Number | Address | Page | Ref. |
|---|---|---|---|
| 64400-MEL-670ZF | 2-B6 | 189 | 11 |
| 64400-MEL-670ZG | 2-B6 | 189 | 11 |
| 64400-MEL-670ZH | 2-B6 | 189 | 11 |
| 64400-MEL-A00ZA | 2-B6 | 189 | 11 |
| 64400-MEL-A00ZB | 2-B6 | 189 | 11 |
| 64400-MEL-A00ZC | 2-B6 | 189 | 11 |
| 64400-MEL-D00ZA | 2-B5 | 188 | 10 |
| 64400-MEL-D00ZB | 2-B5 | 188 | 10 |
| 64400-MEL-D00ZC | 2-B5 | 188 | 10 |
| 64400-MEL-D11ZA | 2-B6 | 189 | 10 |
| 64400-MEL-D20ZA | 2-B7 | 190 | 4 |
| 64400-MEL-D20ZB | 2-B7 | 190 | 4 |
| 64400-MEL-D30ZB | 2-B7 | 190 | 4 |
| 64400-MEL-U00ZA | 2-B5 | 188 | 10 |
| 64400-MEL-U00ZB | 2-B6 | 189 | 10 |
| 64400-MEL-U00ZC | 2-B6 | 189 | 10 |
| 64401-MEL-300 | N16 | 183 | 11 |
| 64402-MEL-300 | N16 | 183 | 12 |
| 64403-MEL-300 | 2-B6 | 189 | 12 |
| 64404-MEL-300 | 2-B6 | 189 | 13 |
| 64406-MEL-670 | N16 | 183 | 14 |
| 64406-MEL-A00 | N16 | 183 | 14 |
| 64407-MEL-670 | 2-B6 | 189 | 14 |
| 64407-MEL-A00 | 2-B6 | 189 | 14 |
| 64408-MEL-670 | 2-B6 | 189 | 15 |
| 64408-MEL-A00 | 2-B6 | 189 | 15 |
| 64409-MEL-300 | 2-B1 | 184 | 21 |
| 64450-MEL-010ZC | 2-B6 | 189 | 16 |
| 64450-MEL-010ZF | 2-B6 | 189 | 16 |
| 64450-MEL-010ZG | 2-B6 | 189 | 16 |
| 64450-MEL-670ZF | 2-B6 | 189 | 17 |
| 64450-MEL-670ZG | 2-B6 | 189 | 17 |
| 64450-MEL-670ZH | 2-B6 | 189 | 17 |
| 64450-MEL-A00ZA | 2-B6 | 189 | 17 |
| 64450-MEL-A00ZB | 2-B6 | 189 | 17 |
| 64450-MEL-A00ZC | 2-B6 | 189 | 17 |
| 64450-MEL-D00ZA | 2-B6 | 189 | 16 |
| 64450-MEL-D00ZB | 2-B6 | 189 | 16 |
| 64450-MEL-D00ZC | 2-B6 | 189 | 16 |
| 64450-MEL-D11ZA | 2-B6 | 189 | 16 |
| 64450-MEL-D20ZA | 2-B7 | 190 | 5 |
| 64450-MEL-D20ZB | 2-B7 | 190 | 5 |
| 64450-MEL-D30ZB | 2-B7 | 190 | 5 |
| 64450-MEL-U00ZA | 2-B6 | 189 | 16 |
| 64450-MEL-U00ZB | 2-B6 | 189 | 16 |
| 64450-MEL-U00ZC | 2-B6 | 189 | 16 |
| 64491-MEL-D20 | 2-B7 | 190 | 6 |
| 64492-MEL-D20 | 2-B7 | 190 | 7 |
| 64501-MEL-010 | N9 | 176 | 7 |
| | N11 | 178 | 8 |
| 64541-MEL-000 | 2-B6 | 189 | 18 |
| 64541-MEL-D20 | 2-B7 | 190 | 8 |
| 64541-MEL-D30 | 2-B7 | 190 | 8 |
| 64542-MEL-000 | 2-B6 | 189 | 19 |
| 64542-MEL-D20 | 2-B7 | 190 | 9 |
| 64543-MEL-000 | N16 | 183 | 15 |
| 64543-MEL-D20 | 2-B4 | 187 | 8 |
| 64544-MEL-000 | N16 | 183 | 16 |
| 64544-MEL-010 | N16 | 183 | 16 |

| Part Number | Address | Page | Ref. |
|---|---|---|---|
| 64544-MEL-D20 | 2-B4 | 187 | 9 |
| 64547-MEL-000 | 2-B6 | 189 | 20 |
| 64547-MEL-D00 | 2-B6 | 189 | 20 |
| 64547-MEL-D20 | 2-B4 | 187 | 10 |
| 64560-MEL-000 | 2-B6 | 189 | 21 |
| 64560-MEL-D20 | 2-B7 | 190 | 10 |
| 64805-MEL-000ZA | 2-B11 | 194 | 1 |
| | 2-B13 | 196 | 1 |
| | 2-B15 | 198 | 1 |
| | 2-C1 | 200 | 1 |
| | 2-C5 | 204 | 1 |
| | 2-C6 | 205 | 2 |
| | 2-C9 | 208 | 4 |
| 64805-MEL-D10ZA | 2-C3 | 202 | 2 |
| 64805-MEL-D40ZA | 2-C12 | 211 | 4 |
| 64811-MEL-000ZA | 2-B12 | 195 | 10 |
| 64811-MEL-000ZB | 2-B12 | 195 | 10 |
| 64811-MEL-A30ZA | 2-C5 | 204 | 2 |
| 64811-MEL-D00ZA | 2-B11 | 194 | 2 |
| 64811-MEL-D10ZA | 2-C3 | 202 | 3 |
| 64811-MEL-D20ZA | 2-C5 | 204 | 2 |
| 64812-MEL-D10ZA | 2-C3 | 202 | 4 |
| 64813-MEL-000ZA | 2-B13 | 196 | 2 |
| 64813-MEL-670ZA | 2-B13 | 196 | 3 |
| 64813-MEL-670ZC | 2-B13 | 196 | 3 |
| 64813-MEL-A00ZA | 2-C1 | 200 | 2 |
| 64813-MEL-A00ZB | 2-C1 | 200 | 2 |
| 64813-MEL-A00ZC | 2-C1 | 200 | 2 |
| 64813-MEL-A20ZA | 2-C9 | 208 | 5 |
| 64813-MEL-D00ZA | 2-B15 | 198 | 2 |
| 64813-MEL-D00ZB | 2-B15 | 198 | 2 |
| 64813-MEL-D10ZA | 2-C3 | 202 | 5 |
| 64813-MEL-D20ZA | 2-C6 | 205 | 3 |
| | 2-C9 | 208 | 5 |
| 64813-MEL-D20ZB | 2-C6 | 205 | 3 |
| | 2-C9 | 208 | 5 |
| 64813-MEL-D30ZA | 2-C6 | 205 | 3 |
| | 2-C9 | 208 | 5 |
| 64813-MEL-D40ZA | 2-C12 | 211 | 5 |
| 64814-MEL-000ZA | 2-B13 | 196 | 4 |
| 64814-MEL-670ZA | 2-B13 | 196 | 5 |
| 64814-MEL-670ZC | 2-B13 | 196 | 5 |
| 64814-MEL-A00ZA | 2-C1 | 200 | 3 |
| 64814-MEL-A00ZB | 2-C1 | 200 | 3 |
| 64814-MEL-A00ZC | 2-C1 | 200 | 3 |
| 64814-MEL-A20ZA | 2-C9 | 208 | 6 |
| 64814-MEL-D00ZA | 2-B15 | 198 | 3 |
| 64814-MEL-D00ZB | 2-B15 | 198 | 3 |
| 64814-MEL-D10ZA | 2-C3 | 202 | 6 |
| 64814-MEL-D20ZA | 2-C6 | 205 | 4 |
| | 2-C10 | 209 | 6 |
| 64814-MEL-D20ZB | 2-C6 | 205 | 4 |
| | 2-C10 | 209 | 6 |
| 64814-MEL-D30ZA | 2-C6 | 205 | 4 |
| | 2-C10 | 209 | 6 |
| 64814-MEL-D40ZA | 2-C12 | 211 | 6 |
| 64815-MEL-000ZA | 2-B13 | 196 | 6 |
| 64815-MEL-A20ZA | 2-C10 | 209 | 7 |
| 64815-MEL-A30ZA | 2-C10 | 209 | 7 |

| Part Number | Address | Page | Ref. |
|---|---|---|---|
| 64815-MEL-A30ZB | 2-C10 | 209 | 7 |
| 64815-MEL-D00ZA | 2-B15 | 198 | 4 |
| 64815-MEL-D00ZB | 2-B15 | 198 | 4 |
| 64815-MEL-D20ZA | 2-C6 | 205 | 5 |
| 64815-MEL-D30ZA | 2-C6 | 205 | 5 |
| 64815-MEL-D30ZB | 2-C6 | 205 | 5 |
| 64815-MEL-D40ZA | 2-C12 | 211 | 7 |
| 64816-MEL-000ZA | 2-B13 | 196 | 7 |
| 64816-MEL-A20ZA | 2-C10 | 209 | 8 |
| 64816-MEL-A30ZA | 2-C10 | 209 | 8 |
| 64816-MEL-A30ZB | 2-C10 | 209 | 8 |
| 64816-MEL-D00ZA | 2-B15 | 198 | 5 |
| 64816-MEL-D00ZB | 2-B15 | 198 | 5 |
| 64816-MEL-D20ZA | 2-C6 | 205 | 6 |
| 64816-MEL-D30ZA | 2-C7 | 206 | 6 |
| 64816-MEL-D30ZB | 2-C7 | 206 | 6 |
| 64816-MEL-D40ZA | 2-C12 | 211 | 8 |
| 64817-MEL-000ZA | 2-B13 | 196 | 8 |
| 64817-MEL-670ZA | 2-B13 | 196 | 8 |
| | 2-C1 | 200 | 4 |
| 64817-MEL-670ZB | 2-B13 | 196 | 8 |
| 64817-MEL-A00ZA | 2-C1 | 200 | 4 |
| 64817-MEL-A00ZB | 2-C1 | 200 | 4 |
| 64817-MEL-A20ZA | 2-C10 | 209 | 7 |
| 64817-MEL-D00ZA | 2-B15 | 198 | 6 |
| 64817-MEL-D00ZB | 2-B15 | 198 | 6 |
| 64817-MEL-D20ZA | 2-C6 | 205 | 5 |
| 64817-MEL-D40ZA | 2-C12 | 211 | 9 |
| 64818-MEL-000ZA | 2-B13 | 196 | 9 |
| 64818-MEL-670ZA | 2-B13 | 196 | 9 |
| | 2-C1 | 200 | 5 |
| 64818-MEL-670ZB | 2-B13 | 196 | 9 |
| 64818-MEL-A00ZA | 2-C1 | 200 | 5 |
| 64818-MEL-A00ZB | 2-C1 | 200 | 5 |
| 64818-MEL-A20ZA | 2-C10 | 209 | 8 |
| 64818-MEL-D00ZA | 2-B15 | 198 | 7 |
| 64818-MEL-D00ZB | 2-B15 | 198 | 7 |
| 64818-MEL-D20ZA | 2-C7 | 206 | 6 |
| 64818-MEL-D40ZA | 2-C12 | 211 | 10 |
| 64819-MEL-000ZA | 2-B11 | 194 | 3 |
| 64819-MEL-000ZB | 2-B11 | 194 | 3 |
| | 2-B14 | 197 | 10 |
| 64819-MEL-000ZC | 2-B14 | 197 | 10 |
| 64819-MEL-000ZD | 2-B11 | 194 | 3 |
| 64819-MEL-000ZE | 2-B14 | 197 | 10 |
| 64819-MEL-D00ZA | 2-C1 | 200 | 6 |
| 64819-MEL-D00ZB | 2-C2 | 201 | 6 |
| 64819-MEL-D00ZC | 2-C2 | 201 | 6 |
| 64819-MEL-D00ZD | 2-B15 | 198 | 8 |
| 64819-MEL-D00ZE | 2-B11 | 194 | 3 |
| 64819-MEL-D10ZA | 2-C3 | 202 | 7 |
| 64819-MEL-D20ZA | 2-C5 | 204 | 3 |
| | 2-C10 | 209 | 9 |
| 64819-MEL-D20ZB | 2-C5 | 204 | 3 |
| | 2-C7 | 206 | 7 |
| | 2-C10 | 209 | 9 |
| 64819-MEL-D30ZB | 2-C12 | 211 | 11 |
| 64820-MEL-000ZA | 2-B11 | 194 | 4 |
| 64820-MEL-000ZB | 2-B11 | 194 | 4 |

4

# PART NO. INDEX




| Part Number | Address | Page | Ref. |
|---|---|---|---|
| 64820-MEL-A20ZA | 2-C5 | 204 | 4 |
| 64820-MEL-A30ZA | 2-C5 | 204 | 4 |
| 64820-MEL-D20ZA | 2-C5 | 204 | 5 |
| 64821-MEL-D00ZA | 2-B16 | 199 | 10 |
| 64821-MEL-D00ZB | 2-B16 | 199 | 10 |
| 64821-MEL-D40ZA | 2-C12 | 211 | 12 |
| 64822-MEL-A20ZA | 2-C10 | 209 | 7 |
| 64822-MEL-D00ZA | 2-B16 | 199 | 11 |
| 64822-MEL-D00ZB | 2-B16 | 199 | 11 |
| 64822-MEL-D10ZA | 2-C3 | 202 | 8 |
| 64822-MEL-D40ZA | 2-C12 | 211 | 13 |
| 64823-MEL-A20ZA | 2-C10 | 209 | 8 |
| 64823-MEL-D00ZA | 2-B16 | 199 | 12 |
| 64823-MEL-D00ZB | 2-B16 | 199 | 12 |
| 64823-MEL-D10ZA | 2-C3 | 202 | 9 |
| 64824-MEL-D00ZA | 2-B16 | 199 | 13 |
| 64824-MEL-D00ZB | 2-B16 | 199 | 13 |
| 64824-MEL-D10ZA | 2-C3 | 202 | 10 |
| 64825-MEL-D00ZA | 2-C2 | 201 | 7 |
| 64825-MEL-D00ZB | 2-C2 | 201 | 7 |
| 64825-MEL-D00ZC | 2-C2 | 201 | 7 |
| 64825-MEL-D00ZD | 2-B16 | 199 | 14 |
| 64825-MEL-D00ZF | 2-B12 | 195 | 9 |
| 64825-MEL-D10ZA | 2-C3 | 202 | 11 |
| 64825-MEL-D20ZA | 2-C5 | 204 | 6 |
| | 2-C10 | 209 | 10 |
| 64825-MEL-D20ZB | 2-C5 | 204 | 6 |
| | 2-C7 | 206 | 8 |
| | 2-C10 | 209 | 10 |
| 64825-MEL-D30ZB | 2-C12 | 211 | 14 |
| 64826-MEL-D00ZA | 2-B16 | 199 | 15 |
| 64826-MEL-D00ZB | 2-B16 | 199 | 15 |
| 64827-MEL-D00ZA | 2-B16 | 199 | 16 |
| 64827-MEL-D00ZB | 2-B16 | 199 | 16 |
| 64841-MEL-000ZA | 2-B11 | 194 | 5 |
| 64841-MEL-000ZB | 2-B11 | 194 | 5 |
| | 2-B14 | 197 | 11 |
| 64841-MEL-000ZC | 2-B14 | 197 | 11 |
| 64841-MEL-000ZD | 2-B14 | 197 | 11 |
| 64841-MEL-D00ZA | 2-B11 | 194 | 5 |
| | 2-C2 | 201 | 8 |
| 64841-MEL-D00ZB | 2-B16 | 199 | 17 |
| | 2-C2 | 201 | 8 |
| 64841-MEL-D00ZC | 2-C2 | 201 | 8 |
| 64841-MEL-D00ZD | 2-B16 | 199 | 17 |
| 64841-MEL-D10ZA | 2-C3 | 202 | 12 |
| 64841-MEL-D20ZA | 2-C5 | 204 | 7 |
| 64841-MEL-D20ZB | 2-C7 | 206 | 9 |
| | 2-C10 | 209 | 11 |
| 64841-MEL-D20ZC | 2-C7 | 206 | 9 |
| | 2-C10 | 209 | 11 |
| 64841-MEL-D20ZD | 2-C10 | 209 | 11 |
| 64841-MEL-D30ZA | 2-C7 | 206 | 9 |
| | 2-C10 | 209 | 11 |
| 64841-MEL-D30ZC | 2-C5 | 204 | 7 |
| 64841-MEL-D30ZD | 2-C13 | 212 | 15 |
| 64842-MEL-000ZA | 2-B11 | 194 | 6 |
| 64842-MEL-000ZB | 2-B11 | 194 | 6 |
| | 2-B14 | 197 | 12 |

| Part Number | Address | Page | Ref. |
|---|---|---|---|
| 64842-MEL-000ZC | 2-B14 | 197 | 12 |
| 64842-MEL-000ZD | 2-B14 | 197 | 12 |
| 64842-MEL-D00ZA | 2-B11 | 194 | 6 |
| | 2-C2 | 201 | 9 |
| 64842-MEL-D00ZB | 2-B16 | 199 | 18 |
| | 2-C2 | 201 | 9 |
| 64842-MEL-D00ZC | 2-C2 | 201 | 9 |
| 64842-MEL-D00ZD | 2-B16 | 199 | 18 |
| 64842-MEL-D10ZA | 2-C3 | 202 | 13 |
| 64842-MEL-D20ZA | 2-C5 | 204 | 8 |
| 64842-MEL-D20ZB | 2-C7 | 206 | 10 |
| | 2-C10 | 209 | 12 |
| 64842-MEL-D20ZC | 2-C7 | 206 | 10 |
| | 2-C10 | 209 | 12 |
| 64842-MEL-D20ZD | 2-C10 | 209 | 12 |
| 64842-MEL-D30ZA | 2-C10 | 209 | 12 |
| 64842-MEL-D30ZC | 2-C5 | 204 | 8 |
| 64842-MEL-D30ZD | 2-C7 | 206 | 10 |
| 64842-MEL-D30ZE | 2-C13 | 212 | 16 |
| 64843-MEL-D10ZA | 2-C3 | 202 | 14 |
| 64844-MEL-D10ZA | 2-C3 | 202 | 15 |
| 64845-MEL-D10ZA | 2-C4 | 203 | 16 |
| 64851-MEL-000ZA | 2-B14 | 197 | 13 |
| | 2-C2 | 201 | 10 |
| 64851-MEL-000ZB | 2-B14 | 197 | 13 |
| 64851-MEL-000ZC | 2-B14 | 197 | 13 |
| 64851-MEL-A00ZA | 2-C2 | 201 | 10 |
| 64851-MEL-A00ZB | 2-C2 | 201 | 10 |
| 64851-MEL-D00ZA | 2-B16 | 199 | 19 |
| 64851-MEL-D00ZB | 2-B16 | 199 | 19 |
| 64851-MEL-D10ZA | 2-C4 | 203 | 17 |
| 64851-MEL-D20ZA | 2-C7 | 206 | 11 |
| | 2-C10 | 209 | 13 |
| 64851-MEL-D20ZB | 2-C7 | 206 | 11 |
| | 2-C10 | 209 | 13 |
| 64851-MEL-D20ZC | 2-C10 | 209 | 13 |
| 64851-MEL-D30ZA | 2-C8 | 207 | 11 |
| | 2-C10 | 209 | 13 |
| 64851-MEL-D40ZA | 2-C13 | 212 | 17 |
| 64852-MEL-000ZA | 2-B14 | 197 | 14 |
| | 2-C2 | 201 | 11 |
| 64852-MEL-000ZB | 2-B14 | 197 | 14 |
| 64852-MEL-000ZC | 2-B14 | 197 | 14 |
| 64852-MEL-A00ZA | 2-C2 | 201 | 11 |
| 64852-MEL-A00ZB | 2-C2 | 201 | 11 |
| 64852-MEL-D00ZA | 2-B16 | 199 | 20 |
| 64852-MEL-D00ZB | 2-B16 | 199 | 20 |
| 64852-MEL-D10ZA | 2-C4 | 203 | 18 |
| 64852-MEL-D20ZA | 2-C8 | 207 | 12 |
| | 2-C10 | 209 | 14 |
| 64852-MEL-D20ZB | 2-C8 | 207 | 12 |
| | 2-C10 | 209 | 14 |
| 64852-MEL-D20ZC | 2-C11 | 210 | 14 |
| 64852-MEL-D30ZA | 2-C8 | 207 | 12 |
| | 2-C11 | 210 | 14 |
| 64852-MEL-D40ZA | 2-C13 | 212 | 18 |
| 64853-MEL-000ZA | 2-B14 | 197 | 15 |
| 64853-MEL-000ZB | 2-B14 | 197 | 15 |
| | 2-C2 | 201 | 12 |

| Part Number | Address | Page | Ref. |
|---|---|---|---|
| 64853-MEL-A00ZA | 2-C2 | 201 | 12 |
| 64853-MEL-D00ZA | 2-B16 | 199 | 21 |
| 64853-MEL-D00ZB | 2-B16 | 199 | 21 |
| 64853-MEL-D20ZA | 2-C8 | 207 | 13 |
| | 2-C11 | 210 | 15 |
| 64853-MEL-D20ZB | 2-C8 | 207 | 13 |
| | 2-C11 | 210 | 15 |
| 64853-MEL-D20ZC | 2-C11 | 210 | 15 |
| 64853-MEL-D30ZA | 2-C8 | 207 | 13 |
| | 2-C11 | 210 | 15 |
| 64853-MEL-D40ZA | 2-C13 | 212 | 19 |
| 64854-MEL-000ZA | 2-B14 | 197 | 16 |
| 64854-MEL-000ZB | 2-B14 | 197 | 16 |
| | 2-C2 | 201 | 13 |
| 64854-MEL-A00ZA | 2-C2 | 201 | 13 |
| 64854-MEL-D00ZA | 2-B16 | 199 | 22 |
| 64854-MEL-D00ZB | 2-B16 | 199 | 22 |
| 64854-MEL-D20ZA | 2-C8 | 207 | 14 |
| | 2-C11 | 210 | 16 |
| 64854-MEL-D20ZB | 2-C8 | 207 | 14 |
| | 2-C11 | 210 | 16 |
| 64854-MEL-D20ZC | 2-C11 | 210 | 16 |
| 64854-MEL-D30ZA | 2-C8 | 207 | 14 |
| | 2-C11 | 210 | 16 |
| 64854-MEL-D40ZA | 2-C13 | 212 | 20 |
| 64855-MEL-000ZA | 2-B11 | 194 | 7 |
| 64855-MEL-000ZB | 2-B11 | 194 | 7 |
| 64855-MEL-A30ZA | 2-C5 | 204 | 9 |
| 64855-MEL-D00ZA | 2-B11 | 194 | 7 |
| 64855-MEL-D20ZA | 2-C5 | 204 | 9 |
| 64856-MEL-000ZA | 2-B11 | 194 | 8 |
| 64856-MEL-000ZB | 2-B11 | 194 | 8 |
| 64856-MEL-A30ZA | 2-C5 | 204 | 10 |
| 64856-MEL-D00ZA | 2-B11 | 194 | 8 |
| 64856-MEL-D20ZA | 2-C5 | 204 | 10 |
| 64857-MEL-D00ZA | 2-B16 | 199 | 23 |
| 64857-MEL-D00ZB | 2-B16 | 199 | 23 |
| 64857-MEL-D10ZA | 2-C4 | 203 | 19 |
| 64858-MEL-D00ZA | 2-B16 | 199 | 24 |
| 64858-MEL-D00ZB | 2-B16 | 199 | 24 |
| 64858-MEL-D10ZA | 2-C4 | 203 | 20 |
| 64859-MEL-D10ZA | 2-C4 | 203 | 21 |
| 64859-MEL-D40ZA | 2-C13 | 212 | 21 |
| 75000 | | | |
| 75581-GN8-920 | K3 | 122 | 1 |
| 77000 | | | |
| 77100-MEL-000 | K3 | 122 | 2 |
| 77100-MEL-010 | K3 | 122 | 2 |
| 77100-MEL-D20 | K3 | 122 | 2 |
| 77105-MEL-000 | N2 | 169 | 17 |
| 77105-MEL-D20 | N2 | 169 | 17 |
| 77106-MEL-000 | N2 | 169 | 18 |
| 77106-MEL-D20 | N2 | 169 | 18 |
| 77205-KM4-000 | M11 | 162 | 16 |
| | M12 | 163 | 11 |

| Part Number | Address | Page | Ref. |
|---|---|---|---|
| 77207-MEL-000 | K3 | 122 | 3 |
| 77210-MEL-010ZE | K4 | 123 | 2 |
| 77210-MEL-010ZF | K4 | 123 | 2 |
| 77210-MEL-010ZG | K4 | 123 | 2 |
| 77210-MEL-010ZH | K4 | 123 | 2 |
| 77210-MEL-D00ZA | K4 | 123 | 2 |
| 77210-MEL-D00ZB | K4 | 123 | 2 |
| 77210-MEL-D00ZC | K4 | 123 | 2 |
| 77210-MEL-D00ZD | K4 | 123 | 2 |
| 77210-MEL-D10ZA | K4 | 123 | 2 |
| 77210-MEL-D20ZA | K6 | 125 | 2 |
| 77210-MEL-D20ZB | K6 | 125 | 2 |
| 77210-MEL-D20ZC | K6 | 125 | 2 |
| 77210-MEL-D20ZD | K6 | 125 | 2 |
| 77210-MEL-D30ZA | K6 | 125 | 2 |
| 77210-MEL-D30ZC | K6 | 125 | 2 |
| 77210-MEL-D30ZD | K6 | 125 | 2 |
| 77210-MEL-D40ZA | K6 | 125 | 2 |
| 77216-MEL-000 | M8 | 159 | 5 |
| 77216-MEL-D20 | M8 | 159 | 5 |
| 77217-MEL-000 | M8 | 159 | 6 |
| 77217-MEL-D20 | M8 | 159 | 6 |
| 77220-MEL-000 | K3 | 122 | 4 |
| 77220-MEL-D20 | K3 | 122 | 4 |
| 77221-MEL-300 | K4 | 123 | 3 |
| | K6 | 125 | 3 |
| 77223-MEL-000 | K4 | 123 | 4 |
| 77223-MEL-D00 | K4 | 123 | 4 |
| | K6 | 125 | 4 |
| 77224-MEL-000 | K4 | 123 | 5 |
| 77224-MEL-D00 | K4 | 123 | 5 |
| | K6 | 125 | 5 |
| 77234-MBL-611 | K3 | 122 | 5 |
| 77236-GW0-000 | K3 | 122 | 6 |
| 77236-KAZ-780 | N3 | 170 | 1 |
| 77240-MEL-000 | K3 | 122 | 7 |
| 77251-GR1-000 | K4 | 123 | 6 |
| | K6 | 125 | 6 |
| 77300-MEL-000 | K3 | 122 | 8 |
| 77300-MEL-010 | K3 | 122 | 8 |
| 77300-MEL-D20 | K3 | 122 | 8 |
| 77300-MEL-D30 | K3 | 122 | 8 |
| 77302-MEE-000 | K3 | 122 | 9 |
| 77310-MEE-940 | K4 | 123 | 7 |
| | K6 | 125 | 7 |
| 80000 | | | |
| 80100-MEE-000 | M1 | 152 | 11 |
| 80100-MEE-670 | M1 | 152 | 11 |
| 80100-MEE-A00 | M3 | 154 | 9 |
| 80100-MEE-D00 | M3 | 154 | 9 |
| 80100-MEE-J00 | M3 | 154 | 9 |
| 80101-165-000 | I16 | 103 | 2 |
| | J13 | 116 | 4 |
| 80101-283-000 | M16 | 167 | 18 |
| 80103-MCJ-750 | L3 | 138 | 29 |
| | L6 | 141 | 28 |
| | M1 | 152 | 12 |

| Part Number | Address | Page | Ref. |
|---|---|---|---|
| | M3 | 154 | 10 |
| 80103-MEL-000 | M1 | 152 | 13 |
| 80104-MEL-000 | M1 | 152 | 14 |
| 80105-MEE-000 | M1 | 152 | 15 |
| 80105-MEL-020 | K4 | 123 | 8 |
| 80105-MEL-D20 | K6 | 125 | 8 |
| 80105-MEL-D30 | K6 | 125 | 8 |
| 80105-MW3-600 | M16 | 167 | 19 |
| 80106-MEE-000 | M1 | 152 | 16 |
| 80106-MEL-D20 | K6 | 125 | 9 |
| 80107-GE0-710 | K4 | 123 | 9 |
| | K6 | 125 | 10 |
| 80107-MEL-000 | K4 | 123 | 10 |
| 80107-MEL-D20 | K6 | 125 | 11 |
| 80109-MEL-700 | K5 | 124 | 21 |
| 80110-MEL-000 | K4 | 123 | 11 |
| 80110-MEL-D20 | K6 | 125 | 12 |
| 80115-MEE-940 | M1 | 152 | 17 |
| 80115-MEL-D20 | M3 | 154 | 11 |
| 80116-MEE-940 | M1 | 152 | 18 |
| 80116-MEL-D20 | M3 | 154 | 12 |
| 80117-MEL-000 | M1 | 152 | 4 |
| 80119-MEL-000 | M1 | 152 | 3 |
| 80120-MEL-000 | M1 | 152 | 19 |
| | M3 | 154 | 13 |
| 80121-MEL-000 | M2 | 153 | 35 |
| 80122-MEL-000 | M2 | 153 | 36 |
| 81000 | | | |
| 81214-MT3-300 | J16 | 119 | 23 |
| 81229-MR5-000 | K1 | 120 | 37 |
| 81257-GAZ-300 | K6 | 125 | 13 |
| | 2-B6 | 189 | 22 |
| | 2-B7 | 190 | 11 |
| 81312-GJ5-000 | L13 | 148 | 15 |
| 83000 | | | |
| 83150-MEL-010ZG | J13 | 116 | 5 |
| 83150-MEL-010ZH | J13 | 116 | 5 |
| 83150-MEL-010ZJ | J13 | 116 | 5 |
| 83150-MEL-010ZK | J13 | 116 | 5 |
| 83150-MEL-010ZL | J13 | 116 | 5 |
| 83150-MEL-A00ZA | J14 | 117 | 6 |
| 83150-MEL-A00ZB | J14 | 117 | 6 |
| 83150-MEL-A00ZC | J14 | 117 | 6 |
| 83150-MEL-A20ZB | J14 | 117 | 6 |
| 83150-MEL-A30ZA | J14 | 117 | 6 |
| 83150-MEL-A30ZC | J14 | 117 | 6 |
| 83150-MEL-D00ZB | J13 | 116 | 5 |
| 83150-MEL-D00ZC | J13 | 116 | 5 |
| 83150-MEL-D00ZD | J13 | 116 | 5 |
| 83150-MEL-D11ZA | J13 | 116 | 5 |
| 83150-MEL-D20ZA | J13 | 116 | 5 |
| 83150-MEL-D20ZD | J13 | 116 | 5 |
| 83150-MEL-D20ZE | J13 | 116 | 5 |
| 83150-MEL-D20ZF | J13 | 116 | 5 |
| 83150-MEL-D30ZA | J14 | 117 | 5 |

# PART NO. INDEX

2-D 8

| Part Number | Address | Page | Ref. |
|---|---|---|---|
| 83150-MEL-D40ZA | J14 | 117 | 5 |
| 83150-MEL-U00ZA | J13 | 116 | 5 |
| 83150-MEL-U00ZB | J13 | 116 | 5 |
| 83150-MEL-U00ZC | J13 | 116 | 5 |
| 83156-MEL-300 | J14 | 117 | 7 |
| 83157-MEL-A00 | J14 | 117 | 8 |
| 83158-MEL-A00 | J14 | 117 | 9 |
| 83159-MEL-A00 | J14 | 117 | 10 |
| 83165-MEL-000 | J14 | 117 | 11 |
| 83166-MEL-000 | J14 | 117 | 12 |
| 83501-MG7-000 | K4 | 123 | 12 |
| | K6 | 125 | 14 |
| 83601-MN5-000 | L3 | 138 | 30 |
| | L6 | 141 | 29 |
| **84000** | | | |
| 84110-MEL-000 | N2 | 169 | 19 |
| 84120-MEL-000 | N2 | 169 | 20 |
| 84703-MEE-D00 | M3 | 154 | 14 |
| 84706-163-670 | I16 | 103 | 3 |
| | J14 | 117 | 13 |
| | M1 | 152 | 20 |
| | M16 | 167 | 20 |
| 84706-415-000 | L3 | 138 | 31 |
| | L6 | 141 | 30 |
| 84710-MEE-650 | M2 | 153 | 21 |
| | M3 | 154 | 15 |
| **86000** | | | |
| 86150-GFC-901 | I14 | 101 | 8 |
| **87000** | | | |
| 87121-MEE-000 | L13 | 148 | 16 |
| 87121-MEL-D20 | L13 | 148 | 16 |
| 87135-MCF-000 | 2-B10 | 193 | 11 |
| 87501-MBW-P00 | 2-B8 | 191 | 2 |
| 87505-MEL-620 | 2-B8 | 191 | 3 |
| 87505-MEL-630 | 2-B8 | 191 | 3 |
| 87505-MEL-640 | 2-B8 | 191 | 3 |
| 87505-MEL-660 | 2-B8 | 191 | 3 |
| 87505-MEL-750 | 2-B8 | 191 | 3 |
| 87505-MEL-B20 | 2-B8 | 191 | 3 |
| 87505-MEL-D20 | 2-B8 | 191 | 3 |
| 87505-MEL-D40 | 2-B8 | 191 | 3 |
| 87505-MEL-F20 | 2-B8 | 191 | 3 |
| 87505-MEL-F40 | 2-B8 | 191 | 3 |
| 87505-MEL-K20 | 2-B8 | 191 | 3 |
| 87505-MEL-M20 | 2-B8 | 191 | 3 |
| 87505-MEL-M30 | 2-B8 | 191 | 3 |
| 87505-MEL-U20 | 2-B8 | 191 | 3 |
| 87507-KFK-750 | 2-B8 | 191 | 4 |
| 87507-MCW-D20 | 2-B8 | 191 | 4 |
| 87507-MCW-F20 | 2-B8 | 191 | 4 |
| 87507-MEE-660 | 2-B8 | 191 | 4 |
| 87507-MEE-760 | 2-B8 | 191 | 4 |
| 87508-MEL-620 | 2-B8 | 191 | 5 |
| 87508-MEL-630 | 2-B8 | 191 | 5 |
| 87508-MEL-640 | 2-B8 | 191 | 5 |
| 87508-MEL-660 | 2-B8 | 191 | 5 |
| 87508-MEL-750 | 2-B8 | 191 | 5 |
| 87512-MCF-D30 | 2-B8 | 191 | 6 |
| 87512-MCF-F20 | 2-B9 | 192 | 6 |
| 87512-MEE-660 | 2-B9 | 192 | 6 |
| 87512-MEE-760 | 2-B9 | 192 | 6 |
| 87512-MEE-761 | 2-B9 | 192 | 6 |
| 87516-KFK-750 | L15 | 150 | 11 |
| 87516-MBZ-G01 | L15 | 150 | 11 |
| 87520-MEL-620 | 2-B9 | 192 | 7 |
| 87520-MEL-F21 | 2-B9 | 192 | 7 |
| 87520-MEL-F40 | 2-B9 | 192 | 7 |
| 87560-KCH-630 | 2-B9 | 192 | 8 |
| 87560-MBR-870 | 2-B9 | 192 | 8 |
| 87560-MBR-871 | 2-B9 | 192 | 8 |
| 87560-MM5-900ZA | 2-B9 | 192 | 8 |
| 87560-MZ0-611 | 2-B9 | 192 | 8 |
| 87560-MZ0-670 | 2-B9 | 192 | 8 |
| 87560-MZ1-620 | 2-B9 | 192 | 9 |
| 87565-MEL-000ZA | 2-B9 | 192 | 10 |
| 87565-MEL-000ZB | 2-B9 | 192 | 10 |
| 87565-MEL-000ZC | 2-B9 | 192 | 10 |
| 87565-MEL-000ZD | 2-B9 | 192 | 10 |
| 87565-MEL-000ZE | 2-B9 | 192 | 10 |
| 87565-MEL-000ZF | 2-B9 | 192 | 10 |
| 87565-MEL-D00ZA | 2-B9 | 192 | 10 |
| 87565-MEL-D00ZB | 2-B9 | 192 | 10 |
| 87565-MEL-D00ZC | 2-B9 | 192 | 10 |
| 87565-MEL-D00ZD | 2-B9 | 192 | 10 |
| 87565-MEL-D00ZE | 2-B9 | 192 | 10 |
| 87565-MEL-D00ZF | 2-B9 | 192 | 10 |
| 87565-MEL-D10ZA | 2-B10 | 193 | 10 |
| 87565-MEL-D20ZA | 2-B10 | 193 | 10 |
| 87565-MEL-D20ZB | 2-B10 | 193 | 10 |
| 87565-MEL-D20ZC | 2-B10 | 193 | 10 |
| 87565-MEL-D20ZD | 2-B10 | 193 | 10 |
| 87565-MEL-D20ZE | 2-B10 | 193 | 10 |
| 87565-MEL-D20ZF | 2-B10 | 193 | 10 |
| 87565-MEL-D20ZG | 2-B10 | 193 | 10 |
| 87586-MEL-630 | 2-B10 | 193 | 11 |
| 87586-MEL-670 | 2-B10 | 193 | 11 |
| 87586-MEL-750 | 2-B10 | 193 | 11 |
| **88000** | | | |
| 88110-MEL-003 | N9 | 176 | 8 |
| 88110-MEL-013 | N9 | 176 | 8 |
| | N11 | 178 | 9 |
| 88120-MEL-003 | N9 | 176 | 9 |
| 88120-MEL-013 | N10 | 177 | 9 |
| | N11 | 178 | 10 |
| **89000** | | | |
| 89101-300-010 | N3 | 170 | 2 |
| 89103-371-000 | N3 | 170 | 3 |
| 89202-KY1-700 | N3 | 170 | 4 |
| 89210-GBJ-J00 | N3 | 170 | 5 |
| 89210-GBJ-J10 | N3 | 170 | 5 |
| 89216-MBG-000 | N3 | 170 | 6 |
| 89218-MAZ-000 | N3 | 170 | 7 |
| 89221-429-000 | N3 | 170 | 8 |
| **90000** | | | |
| 90001-961-670 | M3 | 154 | 16 |
| 90001-MFA-D00 | G7 | 73 | 43 |
| 90001-MG1-000 | L6 | 141 | 31 |
| 90002-MCZ-000 | G9 | 75 | 21 |
| 90002-MY5-850 | F1 | 51 | 7 |
| 90002-PA6-003 | G5 | 71 | 16 |
| 90002-ZG3-000 | M11 | 162 | 17 |
| | M12 | 163 | 12 |
| | | | 20 |
| 90003-MEL-000 | H3 | 85 | 7 |
| 90003-MN4-000 | F15 | 65 | 4 |
| 90004-GHB-600 | F8 | 58 | 9 |
| 90004-GHB-640 | G3 | 69 | 12 |
| 90004-GHB-660 | F1 | 51 | 8 |
| 90004-MEL-000 | G5 | 71 | 17 |
| 90004-MFA-D00 | G5 | 71 | 17 |
| 90005-MAZ-000 | G6 | 72 | 18 |
| 90005-MEL-000 | F2 | 52 | 11 |
| 90006-GHB-630 | G3 | 69 | 13 |
| 90006-GHB-640 | G3 | 69 | 12 |
| 90006-GHB-680 | F9 | 59 | 6 |
| | F14 | 64 | 2 |
| | G1 | 67 | 19 |
| 90006-GHB-700 | G3 | 69 | 14 |
| 90007-MEL-003 | F2 | 52 | 12 |
| 90008-MEL-000 | G5 | 71 | 18 |
| 90009-MF5-000 | M14 | 165 | 18 |
| 90009-PP4-E01 | H3 | 85 | 8 |
| 90010-GHB-650 | G1 | 67 | 30 |
| | G16 | 82 | 19 |
| 90010-GHB-670 | F8 | 58 | 18 |
| 90010-GHB-710 | G1 | 67 | 31 |
| 90010-GHB-760 | G1 | 67 | 32 |
| 90010-GHB-780 | G1 | 67 | 33 |
| 90010-MEL-000 | G7 | 73 | 44 |
| 90010-MLO-720 | L8 | 143 | 9 |
| 90012-MEL-000 | G3 | 69 | 15 |
| 90013-430-000 | F13 | 63 | 7 |
| 90015-MEL-003 | G6 | 72 | 19 |
| 90015-MEL-D20 | M12 | 163 | 13 |
| 90016-MEL-003 | G6 | 72 | 20 |
| 90017-883-000 | G1 | 67 | 20 |
| 90017-MA6-000 | F2 | 52 | 13 |
| 90017-MAT-000 | G6 | 72 | 21 |
| 90017-MEL-000 | G6 | 72 | 22 |
| 90017-MFA-D00 | G6 | 72 | 22 |
| 90018-MEL-000 | G6 | 72 | 23 |
| 90018-MFA-D00 | G6 | 72 | 23 |
| 90018-ZE1-000 | G16 | 82 | 20 |
| 90019-MA6-000 | F2 | 52 | 14 |
| 90019-MBO-000 | G3 | 69 | 16 |
| 90019-MFA-D00 | G6 | 72 | 21 |
| 90020-MBW-610 | I13 | 100 | 22 |
| 90020-MFA-D00 | G7 | 73 | 41 |
| 90021-MFA-D00 | F3 | 53 | 23 |
| | G1 | 67 | 29 |
| 90021-MM5-000 | F9 | 59 | 7 |
| | G3 | 69 | 17 |
| | G13 | 79 | 14 |
| 90022-MAT-000 | F11 | 61 | 15 |
| 90022-MBW-000 | F8 | 58 | 10 |
| 90022-MFA-D00 | G9 | 75 | 22 |
| 90022-MY5-600 | G13 | 79 | 15 |
| 90029-MT4-000 | F15 | 65 | 5 |
| 90035-MM5-000 | F2 | 52 | 15 |
| 90037-422-003 | G11 | 77 | 19 |
| 90048-MEL-000 | G6 | 72 | 24 |
| 90048-MEL-D20 | G6 | 72 | 24 |
| 90065-MEL-000 | L8 | 143 | 10 |
| 90071-MBO-000 | G2 | 68 | 2 |
| 90071-MEL-000 | F2 | 52 | 16 |
| 90074-MT4-000 | J16 | 119 | 24 |
| 90076-MG8-000 | M16 | 167 | 21 |
| 90081-149-010 | F6 | 56 | 14 |
| 90081-MEL-000 | F6 | 56 | 14 |
| 90082-HAO-000 | F8 | 58 | 11 |
| 90085-KFB-000 | K4 | 123 | 13 |
| | K6 | 125 | 15 |
| 90085-MAJ-A20 | J14 | 117 | 14 |
| | K6 | 125 | 15 |
| | N2 | 169 | 21 |
| 90091-MM5-640 | M14 | 165 | 19 |
| 90101-MEL-000 | N2 | 169 | 22 |
| 90101-MR7-006 | I9 | 96 | 16 |
| 90102-MEL-000 | N2 | 169 | 23 |
| 90103-KCM-620 | L6 | 141 | 32 |
| 90103-MBG-000 | M2 | 153 | 22 |
| | M3 | 154 | 17 |
| 90103-MCF-D60 | L3 | 138 | 32 |
| | L6 | 141 | 32 |
| 90104-MEL-305 | N7 | 174 | 37 |
| 90104-MN4-000 | 2-B6 | 189 | 23 |
| 90105-MB1-000 | K15 | 134 | 18 |
| 90105-MBB-000 | J12 | 115 | 14 |
| 90105-MEL-D20 | K13 | 132 | 19 |
| 90105-MY9-000 | L13 | 148 | 17 |
| 90106-KCZ-000 | K5 | 124 | 14 |
| | K6 | 125 | 16 |
| 90106-KY2-701 | K5 | 124 | 15 |
| | K7 | 126 | 17 |
| 90106-MBB-000 | J6 | 109 | 11 |
| 90106-MBY-000 | J14 | 117 | 15 |
| 90106-MCE-000 | M16 | 167 | 22 |
| 90106-MCJ-000 | L13 | 148 | 18 |
| 90106-MEL-000 | L3 | 138 | 33 |
| | L6 | 141 | 33 |
| 90106-MEL-D20 | L13 | 148 | 18 |
| 90107-MBG-000 | I13 | 100 | 23 |
| 90107-MEE-000 | L15 | 150 | 12 |
| 90107-MEL-D20 | K15 | 134 | 19 |
| 90107-MR8-000 | L15 | 150 | 13 |
| 90108-MAT-000 | M2 | 153 | 23 |
| | M3 | 154 | 18 |
| 90108-MEL-000 | F8 | 58 | 12 |
| 90108-MK6-670 | L11 | 146 | 5 |
| 90109-MEL-000 | N2 | 169 | 24 |
| 90109-MR7-000 | J2 | 105 | 24 |
| 90110-MEL-000 | N2 | 169 | 25 |
| 90111-162-000 | N7 | 174 | 29 |
| 90111-187-000 | N5 | 172 | 30 |
| | N7 | 174 | 29 |
| 90111-KV3-700 | L15 | 150 | 14 |
| 90111-KW3-003 | L6 | 141 | 34 |
| | N10 | 177 | 10 |
| | N11 | 178 | 11 |
| | N16 | 183 | 17 |
| | 2-B4 | 187 | 11 |
| | 2-B7 | 190 | 12 |
| 90111-MEL-000 | N10 | 177 | 11 |
| | N11 | 178 | 12 |
| 90111-MR5-000 | M9 | 160 | 10 |
| | M10 | 161 | 9 |
| 90112-MBS-000 | I14 | 101 | 9 |
| 90112-MEL-000 | I14 | 101 | 10 |
| 90112-MEL-D20 | I14 | 101 | 9 |
| 90113-MAS-E00 | I15 | 102 | 7 |
| | L13 | 148 | 19 |
| 90113-MCF-000 | L8 | 143 | 11 |
| 90113-MCJ-000 | N16 | 183 | 18 |
| | 2-B4 | 187 | 12 |
| 90114-KW7-900 | M8 | 159 | 7 |
| 90114-MA5-671 | I9 | 96 | 17 |
| 90114-MAC-780 | K10 | 129 | 16 |
| | K15 | 134 | 20 |
| 90114-MCF-006 | I7 | 94 | 27 |
| 90114-MCJ-000 | N16 | 183 | 19 |
| | 2-B4 | 187 | 13 |
| | 2-B6 | 189 | 24 |
| | 2-B7 | 190 | 13 |
| 90114-MEL-000 | L3 | 138 | 34 |
| | L6 | 141 | 35 |
| 90115-MEL-000 | L3 | 138 | 35 |
| | L6 | 141 | 36 |
| 90115-MJ1-830 | N2 | 169 | 26 |
| 90115-MR7-003 | L15 | 150 | 15 |
| 90116-MAS-E00 | K12 | 131 | 8 |
| 90116-MCS-G00 | N11 | 178 | 13 |
| 90117-MR7-000 | I7 | 94 | 28 |
| 90118-MBV-000 | L3 | 138 | 36 |
| | L6 | 141 | 37 |
| 90118-MEL-000 | I16 | 103 | 4 |
| | L6 | 141 | 38 |
| | M16 | 167 | 23 |
| 90118-MR1-000 | K3 | 122 | 10 |
| | K5 | 124 | 16 |
| | K7 | 126 | 18 |
| | L3 | 138 | 37 |
| | L9 | 144 | 17 |
| 90120-MEE-000 | N10 | 177 | 12 |

4

# PART NO. INDEX




| Part Number | Address | Page | Ref. |
|---|---|---|---|
| 90120-MEE-000 | N11 | 178 | 14 |
| 90120-MEL-000 | N10 | 177 | 13 |
| 90121-MCF-D30 | J12 | 115 | 15 |
| 90121-MV9-670 | G1 | 67 | 21 |
| 90122-752-000 | M2 | 153 | 24 |
| | M3 | 154 | 19 |
| 90125-MCJ-750 | J7 | 110 | 17 |
| 90126-MR7-003 | J2 | 105 | 25 |
| 90128-KBP-900 | N2 | 169 | 27 |
| 90128-KET-900 | N2 | 169 | 41 |
| 90128-KL4-000 | J16 | 119 | 25 |
| 90130-MCJ-750 | L13 | 148 | 20 |
| 90130-MEE-000 | N10 | 177 | 14 |
| | N12 | 179 | 15 |
| 90131-MEL-000 | J4 | 107 | 14 |
| 90131-MEL-D20 | J4 | 107 | 14 |
| 90132-MEL-000 | L15 | 150 | 16 |
| 90133-MEL-000 | G6 | 72 | 25 |
| 90134-MEL-000 | I15 | 102 | 8 |
| 90135-MEL-000 | J7 | 110 | 18 |
| 90136-MEL-000 | J16 | 119 | 26 |
| 90140-MCJ-750 | I13 | 100 | 24 |
| 90141-MEL-003 | J4 | 107 | 15 |
| 90145-MS9-612 | I7 | 94 | 29 |
| | I9 | 96 | 18 |
| | J7 | 110 | 19 |
| 90147-MCE-950 | L11 | 146 | 6 |
| 90151-MEL-000 | N2 | 169 | 28 |
| 90152-MEL-000 | N2 | 169 | 29 |
| 90157-ME9-000 | L9 | 144 | 18 |
| 90161-MEL-000 | N2 | 169 | 30 |
| 90161-MEL-D20 | N2 | 169 | 30 |
| 90162-MEL-000 | N2 | 169 | 31 |
| 90162-MEL-D20 | N2 | 169 | 31 |
| 90163-MEL-000 | N2 | 169 | 32 |
| 90164-MEL-000 | N2 | 169 | 33 |
| 90180-MN8-006 | J9 | 112 | 16 |
| 90191-KT7-750 | I13 | 100 | 25 |
| 90201-415-000 | I7 | 94 | 30 |
| | I9 | 96 | 19 |
| 90201-700-000 | L8 | 143 | 12 |
| 90201-MBB-000 | L3 | 138 | 38 |
| | L6 | 141 | 39 |
| 90201-MW0-000 | N2 | 169 | 34 |
| 90201-PD1-000 | H3 | 85 | 9 |
| | J16 | 119 | 27 |
| 90202-MBB-000 | L3 | 138 | 39 |
| | L6 | 141 | 40 |
| 90203-MF9-710 | L11 | 146 | 7 |
| 90231-MS2-610 | F11 | 61 | 16 |
| 90301-473-003 | I14 | 101 | 11 |
| 90301-MG3-000 | I7 | 94 | 31 |
| 90302-425-830 | I15 | 102 | 9 |
| 90304-GE8-003 | L15 | 150 | 17 |
| 90304-KAE-871 | J12 | 115 | 16 |
| 90304-MEE-D00 | I13 | 100 | 30 |
| 90304-MK3-000 | I13 | 100 | 26 |
| 90304-MM5-000 | L3 | 138 | 40 |
| | L6 | 141 | 41 |
| 90305-MCF-D00 | J12 | 115 | 17 |
| | L13 | 148 | 21 |
| 90305-MCJ-000 | J6 | 109 | 12 |
| 90305-MEL-D20 | J6 | 109 | 12 |
| 90307-MEL-000 | L4 | 139 | 41 |
| 90309-357-000 | L14 | 149 | 22 |
| 90312-MT3-000 | I1 | 88 | 12 |
| | J14 | 117 | 16 |
| | K15 | 134 | 21 |
| 90315-MK3-003 | N5 | 172 | 31 |
| | N7 | 174 | 30 |
| 90320-MM5-000 | 2-B6 | 189 | 25 |
| 90354-MCF-D00 | L14 | 149 | 23 |
| 90401-430-000 | N2 | 169 | 42 |
| 90401-MBW-000 | F8 | 58 | 13 |
| 90401-MCJ-000 | J12 | 115 | 18 |
| | L14 | 149 | 24 |
| 90401-MEE-000 | F13 | 63 | 8 |
| 90401-MS2-610 | F11 | 61 | 17 |
| 90402-HA5-000 | G11 | 77 | 20 |
| 90404-MBW-000 | F13 | 63 | 9 |
| 90405-MCA-780 | F15 | 65 | 6 |
| 90405-MFA-D00 | F13 | 63 | 9 |
| 90408-KW1-900 | F8 | 58 | 14 |
| 90417-360-000 | G13 | 79 | 16 |
| 90428-PD6-003 | H3 | 85 | 10 |
| | J16 | 119 | 28 |
| 90430-PD6-003 | H3 | 85 | 11 |
| 90432-MM8-003 | F11 | 61 | 18 |
| 90435-MEE-000 | F13 | 63 | 10 |
| 90439-MB0-000 | L6 | 141 | 42 |
| 90442-397-000 | F8 | 58 | 15 |
| | H4 | 86 | 2 |
| 90443-GC8-000 | J7 | 110 | 20 |
| 90443-MEL-000 | I14 | 101 | 12 |
| 90443-MJ6-000 | G6 | 72 | 26 |
| | H5 | 87 | 2 |
| 90447-KE1-000 | G6 | 72 | 27 |
| 90451-155-000 | G13 | 79 | 17 |
| 90451-VM0-000 | F11 | 61 | 19 |
| 90452-MAT-000 | G11 | 77 | 21 |
| 90452-MR7-000 | G11 | 77 | 22 |
| 90454-MC7-000 | G16 | 82 | 21 |
| 90456-MEL-000 | F13 | 63 | 11 |
| 90456-MFA-D00 | F13 | 63 | 11 |
| 90457-MAT-000 | G9 | 75 | 16 |
| 90458-729-920 | G11 | 77 | 30 |
| 90458-MAT-000 | G9 | 75 | 17 |
| 90459-438-000 | G11 | 77 | 24 |
| 90463-MAT-000 | G11 | 77 | 25 |
| 90463-MCJ-000 | G11 | 77 | 26 |
| 90463-MEE-000 | H5 | 87 | 2 |
| 90463-ML7-000 | F2 | 52 | 17 |
| | F8 | 58 | 16 |
| | G1 | 67 | 22 |
| | G6 | 72 | 28 |
| | H4 | 86 | 2 |
| | H5 | 87 | 2 |
| 90464-MAT-000 | G11 | 77 | 27 |
| 90464-MCJ-000 | G11 | 77 | 28 |
| 90469-759-000 | G11 | 77 | 29 |
| 90473-147-000 | I7 | 94 | 32 |
| 90501-MEL-D20 | L6 | 141 | 43 |
| 90502-MCF-000 | J12 | 115 | 19 |
| 90502-MEL-305 | N8 | 175 | 38 |
| 90503-KAE-000 | M12 | 163 | 14 |
| 90504-964-000 | N10 | 177 | 15 |
| | N12 | 179 | 16 |
| 90505-MBW-000 | L8 | 143 | 13 |
| 90506-425-830 | I15 | 102 | 10 |
| 90522-170-700 | K3 | 122 | 11 |
| 90524-030-000 | J16 | 119 | 29 |
| 90525-428-900 | J14 | 117 | 17 |
| | M2 | 153 | 25 |
| | M16 | 167 | 24 |
| 90534-MV4-000 | L4 | 139 | 51 |
| 90543-MV9-670 | F1 | 51 | 9 |
| 90545-300-000 | I7 | 94 | 33 |
| | I9 | 96 | 20 |
| | J8 | 111 | 21 |
| 90554-MEL-000 | G11 | 77 | 23 |
| 90557-230-000 | L8 | 143 | 14 |
| 90572-MEL-000 | K5 | 124 | 17 |
| | K7 | 126 | 19 |
| | L4 | 139 | 42 |
| | L7 | 142 | 44 |
| | L9 | 144 | 19 |
| | L10 | 145 | 29 |
| 90581-GB5-610 | M2 | 153 | 34 |
| | M3 | 154 | 20 |
| 90601-KAF-003 | L8 | 143 | 15 |
| 90601-KJ9-000 | F9 | 59 | 5 |
| 90603-MN4-000 | G11 | 77 | 31 |
| 90604-MM5-000 | G11 | 77 | 32 |
| 90620-SB2-003 | M14 | 165 | 20 |
| | M16 | 167 | 25 |
| 90627-ZA8-801 | K8 | 127 | 20 |
| | K13 | 132 | 20 |
| 90646-657-000 | K8 | 127 | 21 |
| | K13 | 132 | 21 |
| 90649-SC2-003 | M14 | 165 | 21 |
| 90650-KV6-003 | M14 | 165 | 22 |
| 90650-MA6-720 | M16 | 167 | 28 |
| 90651-MA5-671 | I10 | 97 | 21 |
| 90651-MCF-006 | I7 | 94 | 34 |
| 90652-KT1-771 | M14 | 165 | 23 |
| | M16 | 167 | 26 |
| 90657-SB0-003 | K5 | 124 | 18 |
| | K7 | 126 | 20 |
| 90658-SA0-003 | G16 | 82 | 22 |
| 90681-763-A01 | M14 | 165 | 24 |
| | M16 | 167 | 27 |
| 90682-735-A01 | G1 | 67 | 34 |
| 90683-GR1-003 | K5 | 124 | 19 |
| | K7 | 126 | 21 |
| | L14 | 149 | 25 |
| | 2-B4 | 187 | 14 |
| | 2-B6 | 189 | 26 |
| | 2-B7 | 190 | 14 |
| 90683-MBW-003 | K7 | 126 | 22 |
| | 2-B6 | 189 | 27 |
| | 2-B7 | 190 | 15 |
| 90701-MEL-000 | G6 | 72 | 29 |
| 90701-MV9-670 | F9 | 59 | 8 |
| | G6 | 72 | 30 |
| 90841-001-000 | N2 | 169 | 35 |
| 90852-898-000 | I2 | 89 | 13 |
| 90899-422-610 | M2 | 153 | 26 |
| | M3 | 154 | 21 |
| 91000 | | | |
| 91001-MEL-003 | G11 | 77 | 33 |
| 91002-MEL-003 | G11 | 77 | 34 |
| 91002-MG8-003 | G13 | 79 | 18 |
| 91003-MEL-003 | G11 | 77 | 35 |
| 91004-MEL-003 | G11 | 77 | 36 |
| 91008-362-000 | F11 | 61 | 20 |
| 91008-374-003 | G14 | 80 | 19 |
| 91011-MEL-000 | G6 | 72 | 31 |
| 91012-MEL-000 | G6 | 72 | 32 |
| 91015-KT8-005 | I15 | 102 | 11 |
| 91015-MEL-003 | G9 | 75 | 18 |
| 91016-KT8-005 | I15 | 102 | 12 |
| 91016-MEL-003 | G9 | 75 | 18 |
| 91017-MEL-003 | G9 | 75 | 18 |
| 91025-KT7-003 | F13 | 63 | 12 |
| 91026-MEL-003 | G12 | 78 | 37 |
| 91051-HA7-671 | J12 | 115 | 20 |
| 91052-MCF-003 | J6 | 109 | 13 |
| | J12 | 115 | 21 |
| 91053-MAZ-003 | J12 | 115 | 22 |
| 91053-MCJ-003 | L14 | 149 | 26 |
| 91053-MCJ-751 | L14 | 149 | 27 |
| 91059-KY2-711 | I13 | 100 | 27 |
| 91071-MCJ-003 | L14 | 149 | 28 |
| 91071-MY1-005 | L16 | 151 | 18 |
| 91074-KZ4-B01 | L16 | 151 | 19 |
| 91074-MBR-722 | L16 | 151 | 20 |
| 91101-121-691 | G1 | 67 | 23 |
| 91101-MEE-003 | F11 | 61 | 21 |
| 91101-MEL-D20 | F11 | 61 | 21 |
| 91102-MEE-003 | F11 | 61 | 21 |
| 91102-MEL-D20 | F11 | 61 | 21 |
| 91103-MEE-003 | F11 | 61 | 21 |
| 91103-MEL-D20 | F11 | 61 | 21 |
| 91201-MEL-013 | G12 | 78 | 38 |
| 91202-MEL-003 | G6 | 72 | 33 |
| 91203-KK3-830 | G1 | 67 | 24 |
| 91209-MB0-003 | G1 | 67 | 25 |
| 91212-422-006 | I7 | 94 | 35 |
| | I10 | 97 | 22 |
| | J8 | 111 | 22 |
| 91252-MCF-003 | L14 | 149 | 29 |
| 91252-MCJ-003 | J6 | 109 | 14 |
| 91253-MCF-003 | L14 | 149 | 30 |
| 91254-MEE-003 | J12 | 115 | 23 |
| 91254-MEJ-003 | J2 | 105 | 26 |
| 91255-MCJ-751 | J2 | 105 | 27 |
| 91256-MCJ-751 | J2 | 105 | 28 |
| 91257-MCJ-751 | J2 | 105 | 29 |
| 91258-GF4-003 | J2 | 105 | 30 |
| 91262-KV3-831 | L16 | 151 | 21 |
| 91301-MEE-003 | G6 | 72 | 34 |
| | H5 | 87 | 2 |
| 91301-MEL-003 | F2 | 52 | 18 |
| | H4 | 86 | 2 |
| 91301-ML7-003 | F9 | 59 | 9 |
| | H5 | 87 | 2 |
| 91301-P7A-004 | H2 | 84 | 18 |
| | H3 | 85 | 12 |
| 91302-377-000 | G9 | 75 | 19 |
| | H5 | 87 | 2 |
| 91302-MB0-013 | G1 | 67 | 26 |
| | H5 | 87 | 2 |
| 91302-MCA-000 | H3 | 85 | 13 |
| 91302-MEL-003 | G16 | 82 | 23 |
| | H5 | 87 | 2 |
| 91302-ZE9-000 | G6 | 72 | 35 |
| | H5 | 87 | 2 |
| 91303-377-000 | G6 | 72 | 36 |
| | H5 | 87 | 2 |
| 91303-PK2-005 | K8 | 127 | 22 |
| | K13 | 132 | 22 |
| 91306-MEL-003 | G3 | 69 | 18 |
| | H5 | 87 | 2 |
| 91307-KF0-003 | F9 | 59 | 10 |
| | H5 | 87 | 2 |
| 91309-425-003 | G2 | 68 | 3 |
| | H5 | 87 | 2 |
| 91309-PX4-003 | F2 | 52 | 19 |
| 91313-MB0-003 | G3 | 69 | 19 |
| | H5 | 87 | 2 |
| 91320-MB0-000 | G2 | 68 | 12 |
| 91320-MBE-008 | G2 | 68 | 11 |
| 91351-KZ3-731 | L16 | 151 | 22 |
| 91351-MAC-671 | L16 | 151 | 23 |
| 91352-MCF-003 | J12 | 115 | 24 |
| 91354-MCT-003 | G3 | 69 | 20 |
| | H5 | 87 | 2 |
| 91355-MG9-006 | I10 | 97 | 23 |
| 91410-679-000 | G7 | 73 | 45 |
| | K1 | 120 | 38 |
| | M2 | 153 | 27 |
| | M4 | 155 | 22 |
| 91456-ME1-670 | N2 | 169 | 36 |
| 91508-MM5-000 | K8 | 127 | 23 |
| | K13 | 132 | 23 |
| 91540-SOA-003 | I5 | 92 | 11 |
| | I13 | 100 | 28 |
| 91541-SOA-003 | I13 | 100 | 28 |
| | M14 | 165 | 25 |
| | M16 | 167 | 28 |
| 91549-MCA-000 | I14 | 101 | 13 |
| 91549-MW0-790ZA | K10 | 129 | 17 |
| | K15 | 134 | 22 |

# PART NO. INDEX

2-D10


| Part Number | Address | Page | Ref. |
|---|---|---|---|
| 91549-MW0-790ZA | N5 | 172 | 32 |
| | 2-B6 | 189 | 28 |
| 91565-SEL-003 | I2 | 89 | 14 |
| | M12 | 163 | 15 |
| | M14 | 165 | 26 |
| | M16 | 167 | 29 |
| 92000 | | | |
| 92101-05014-0A | K10 | 129 | 18 |
| 92501-06018-0G | I7 | 94 | 36 |
| 92501-06050-0A | L9 | 144 | 20 |
| 93000 | | | |
| 93401-06012-08 | N5 | 172 | 33 |
| | N7 | 174 | 31 |
| 93404-06025-00 | N5 | 172 | 34 |
| | N7 | 174 | 32 |
| 93500-04032-0G | I5 | 92 | 12 |
| 93500-04045-0G | I5 | 92 | 13 |
| 93500-05016-0G | K15 | 134 | 23 |
| 93500-05020-0G | I5 | 92 | 15 |
| | | | 16 |
| 93500-05022-0G | I5 | 92 | 14 |
| 93500-05030-0G | I5 | 92 | 15 |
| 93500-05035-0G | I5 | 92 | 15 |
| 93500-05040-0G | I5 | 92 | 16 |
| 93500-05045-0G | I5 | 92 | 16 |
| 93600-04040-1G | J8 | 111 | 23 |
| 93600-04050-1G | I7 | 94 | 37 |
| 93892-03008-10 | H2 | 84 | 19 |
| 93892-05012-10 | H2 | 84 | 20 |
| 93892-06020-10 | H2 | 84 | 21 |
| 93893-04012-17 | I7 | 94 | 38 |
| | I10 | 97 | 24 |
| | J8 | 111 | 24 |
| 93894-05022-07 | I2 | 89 | 15 |
| 93901-24380 | I3 | 90 | 7 |
| 93901-25420 | K8 | 127 | 24 |
| | K14 | 133 | 24 |
| 93901-32120 | M6 | 157 | 19 |
| 93901-34410 | M2 | 153 | 28 |
| | M4 | 155 | 23 |
| 93901-344J0 | I2 | 89 | 16 |
| 93903-22480 | I3 | 90 | 7 |
| 93903-24180 | J14 | 117 | 18 |
| 93903-24280 | K5 | 124 | 20 |
| | K7 | 126 | 23 |
| | M4 | 155 | 24 |
| | N10 | 177 | 16 |
| 93903-24320 | K3 | 122 | 12 |
| 93903-24480 | K10 | 129 | 19 |
| 93903-25280 | M2 | 153 | 29 |
| 93903-25320 | K10 | 129 | 20 |
| 93903-25380 | K11 | 130 | 21 |
| | K16 | 135 | 24 |
| 93903-25480 | K9 | 128 | 26 |
| | | | 27 |

| Part Number | Address | Page | Ref. |
|---|---|---|---|
| | K14 | 133 | 25 |
| 93911-24320 | M6 | 157 | 20 |
| 93911-24380 | M5 | 156 | 12 |
| | M6 | 157 | 21 |
| 93913-14180 | M4 | 155 | 24 |
| 93913-24280 | K8 | 127 | 25 |
| | K14 | 133 | 26 |
| | M4 | 155 | 24 |
| 93913-25380 | I4 | 91 | 8 |
| 94000 | | | |
| 94001-06000-0S | M12 | 163 | 16 |
| 94001-06020-0S | L8 | 143 | 16 |
| | M11 | 162 | 18 |
| | M12 | 163 | 17 |
| 94002-08000-0S | J8 | 111 | 25 |
| 94021-06070-0S | I7 | 94 | 39 |
| 94050-04000 | M14 | 165 | 27 |
| | M16 | 167 | 30 |
| 94050-05000 | M2 | 153 | 30 |
| | M4 | 155 | 25 |
| | M8 | 159 | 8 |
| 94050-06000 | L4 | 139 | 43 |
| | L7 | 142 | 45 |
| | M12 | 163 | 16 |
| | N2 | 169 | 37 |
| 94050-06070 | M2 | 153 | 31 |
| | M4 | 155 | 26 |
| | M5 | 156 | 13 |
| | M7 | 158 | 22 |
| 94050-06080 | J16 | 119 | 30 |
| 94050-10000 | N2 | 169 | 38 |
| 94050-12000 | N2 | 169 | 39 |
| 94101-04800 | K3 | 122 | 13 |
| 94101-05000 | K11 | 130 | 22 |
| | K16 | 135 | 25 |
| 94101-06000 | L9 | 144 | 21 |
| | M12 | 163 | 18 |
| | N5 | 172 | 35 |
| 94102-08000 | L10 | 145 | 22 |
| 94102-08800 | K3 | 122 | 14 |
| 94103-05700 | I4 | 91 | 9 |
| 94103-06000 | L7 | 142 | 46 |
| 94103-08000 | L4 | 139 | 44 |
| | L7 | 142 | 47 |
| 94103-08700 | L4 | 139 | 45 |
| | L8 | 143 | 17 |
| 94109-12000 | G3 | 69 | 21 |
| | H5 | 87 | 2 |
| 94201-16120 | L10 | 145 | 23 |
| 94201-16150 | J8 | 111 | 26 |
| 94201-20150 | L10 | 145 | 24 |
| 94301-08100 | G1 | 67 | 27 |
| 94301-08140 | F1 | 51 | 10 |
| | F14 | 64 | 3 |
| | G1 | 67 | 28 |
| | G4 | 70 | 22 |
| 94301-08200 | F2 | 52 | 20 |

| Part Number | Address | Page | Ref. |
|---|---|---|---|
| 94301-10160 | F3 | 53 | 21 |
| 94303-04065 | G9 | 75 | 20 |
| 94510-14000 | G14 | 80 | 20 |
| 94511-15000 | L8 | 143 | 18 |
| 94520-45000 | L14 | 149 | 31 |
| 94520-63150 | F13 | 63 | 13 |
| 94591-24000 | M4 | 155 | 27 |
| 95000 | | | |
| 95002-02100 | N5 | 172 | 36 |
| | N7 | 174 | 33 |
| 95002-50000 | N5 | 172 | 37 |
| | N7 | 174 | 34 |
| 95005-12030-20 | K9 | 128 | 28 |
| 95005-35050-20 | H2 | 84 | 22 |
| 95005-35060-20 | H2 | 84 | 23 |
| 95005-35100-20 | K11 | 130 | 23 |
| 95005-35130-20 | H2 | 84 | 24 |
| 95005-35150-20 | H2 | 84 | 25 |
| 95005-35490-20 | H2 | 84 | 26 |
| 95005-35540-20 | H2 | 84 | 26 |
| 95005-45230-20 | K11 | 130 | 24 |
| 95005-45450-20 | K1 | 120 | 32 |
| 95005-50540-30 | N5 | 172 | 38 |
| 95005-50550-30 | N5 | 172 | 38 |
| 95005-80040-50 | K2 | 121 | 48 |
| 95005-80110-50 | K2 | 121 | 49 |
| 95005-80170-50 | K1 | 120 | 41 |
| 95005-80240-50 | K1 | 120 | 41 |
| 95005-80340-20 | K1 | 120 | 31 |
| 95005-80400-20 | K1 | 120 | 31 |
| | | | 41 |
| 95005-80440-20 | K1 | 120 | 32 |
| 95012-11001 | M14 | 165 | 28 |
| 95012-13001 | M9 | 160 | 11 |
| | M10 | 161 | 10 |
| 95015-83000 | L10 | 145 | 25 |
| 95701-06012-00 | F15 | 65 | 5 |
| | G12 | 78 | 39 |
| 95701-06014-00 | F8 | 58 | 17 |
| | F9 | 59 | 11 |
| | G6 | 72 | 37 |
| 95701-06016-00 | G14 | 80 | 21 |
| 95701-06018-00 | G6 | 72 | 38 |
| | G9 | 75 | 21 |
| 95701-06018-07 | F3 | 53 | 22 |
| 95701-06020-00 | G7 | 73 | 39 |
| 95701-06025-00 | G7 | 73 | 40 |
| 95701-06028-00 | G7 | 73 | 41 |
| 95701-06035-00 | G16 | 82 | 24 |
| 95701-06040-00 | G4 | 70 | 23 |
| 95701-06045-00 | F3 | 53 | 23 |
| | G1 | 67 | 29 |
| 95701-06050-00 | G4 | 70 | 24 |
| 95701-08025-00 | G9 | 75 | 22 |
| 95701-08040-00 | G7 | 73 | 42 |
| 95701-08055-00 | G7 | 73 | 43 |
| 95801-06025-08 | G2 | 68 | 4 |

| Part Number | Address | Page | Ref. |
|---|---|---|---|
| 95801-06035-00 | K1 | 120 | 33 |
| 95801-08030-00 | L4 | 139 | 46 |
| | L7 | 142 | 48 |
| 96000 | | | |
| 96001-06008-00 | H3 | 85 | 14 |
| 96001-06008-02 | M11 | 162 | 19 |
| 96001-06010-00 | N5 | 172 | 39 |
| 96001-06010-07 | I10 | 97 | 26 |
| | L8 | 143 | 20 |
| | M11 | 162 | 20 |
| | | | 21 |
| 96001-06012-00 | F15 | 65 | 5 |
| | H3 | 85 | 15 |
| | K11 | 130 | 25 |
| | L1 | 136 | 9 |
| | M14 | 165 | 29 |
| 96001-06012-07 | I7 | 94 | 36 |
| | M16 | 167 | 32 |
| | N16 | 183 | 20 |
| | 2-B4 | 187 | 15 |
| 96001-06014-00 | K11 | 130 | 26 |
| | K16 | 135 | 26 |
| 96001-06016-07 | I7 | 94 | 40 |
| 96001-06018-07 | I7 | 94 | 40 |
| 96001-06020-00 | G1 | 67 | 30 |
| | I14 | 101 | 14 |
| | M2 | 153 | 32 |
| | N7 | 174 | 35 |
| 96001-06020-02 | L4 | 139 | 47 |
| | L7 | 142 | 49 |
| 96001-06020-05 | L7 | 142 | 49 |
| 96001-06022-07 | I7 | 94 | 41 |
| | I10 | 97 | 25 |
| | M11 | 162 | 22 |
| 96001-06025-00 | F8 | 58 | 18 |
| | G1 | 67 | 21 |
| | M12 | 163 | 19 |
| | N5 | 172 | 40 |
| | N7 | 174 | 36 |
| 96001-06025-07 | I14 | 101 | 15 |
| 96001-06032-00 | G1 | 67 | 20 |
| 96001-06035-00 | L7 | 142 | 50 |
| 96001-06040-00 | G1 | 67 | 31 |
| 96001-06065-00 | G1 | 67 | 32 |
| 96001-06075-00 | G1 | 67 | 33 |
| 96211-08000 | L10 | 145 | 26 |
| 96220-30080 | G14 | 80 | 22 |
| 96300-06012-00 | F3 | 53 | 24 |
| | M14 | 165 | 30 |
| | 2-B4 | 187 | 16 |
| 96300-06012-07 | M16 | 167 | 32 |
| | 2-B4 | 187 | 17 |
| | 2-B6 | 189 | 29 |
| 96300-06014-00 | N2 | 169 | 40 |
| 96300-06014-07 | K11 | 130 | 27 |
| 96300-06018-00 | N2 | 169 | 40 |
| 96300-06020-00 | M4 | 155 | 28 |

| Part Number | Address | Page | Ref. |
|---|---|---|---|
| | N5 | 172 | 41 |
| | 2-B6 | 189 | 30 |
| | 2-B7 | 190 | 16 |
| 96300-06028-07 | I7 | 94 | 42 |
| 96300-06035-00 | L4 | 139 | 48 |
| | L7 | 142 | 51 |
| 96300-08012-07 | I15 | 102 | 13 |
| 96300-08022-00 | I14 | 101 | 16 |
| | N2 | 169 | 41 |
| 96400-08032-00 | L4 | 139 | 49 |
| | L7 | 142 | 52 |
| 96400-08045-07 | L4 | 139 | 50 |
| 96500-06018-00 | J8 | 111 | 27 |
| 96600-06012-00 | K3 | 122 | 15 |
| 96600-06028-00 | F15 | 65 | 7 |
| 96600-08020-10 | G14 | 80 | 23 |
| 96600-10028-07 | L11 | 146 | 9 |
| 98000 | | | |
| 98200-33000 | M9 | 160 | 12 |
| | M10 | 161 | 11 |
| 98200-41000 | M14 | 165 | 31 |
| | M16 | 167 | 33 |
| 98200-42000 | M9 | 160 | 13 |
| | M10 | 161 | 12 |
| | M14 | 165 | 32 |
| | M16 | 167 | 34 |
| 99000 | | | |
| 99001-08120 | N3 | 170 | 9 |
| 99001-10120 | N3 | 170 | 10 |
| 99002-13500 | N3 | 170 | 5 |
| 99003-10000 | N3 | 170 | 11 |
| 99003-30000 | N3 | 170 | 12 |
| 99003-50000 | N3 | 170 | 13 |
| 99006-12000 | N3 | 170 | 14 |
| 99006-22000 | N3 | 170 | 15 |


4

# PART NAME INDEX

2-E 1


| Part name | Address | Page | Ref. |
|---|---|---|---|
| [ A ] | | | |
| ARM COMP., GEAR CHANGE | L8 | 143 | 2 |
| ARM COMP., SECOND | I14 | 101 | 5 |
| ARM SUB ASSY., CUSHION | L15 | 150 | 5 |
| ARM, L. MAIN STEP | L9 | 144 | 8 |
| ARM, L. PILLION STEP | L9 | 144 | 13 |
| ARM, R. MAIN STEP | L9 | 144 | 7 |
| ARM, R. PILLION STEP | L9 | 144 | 12 |
| AXLE, FR. WHEEL | J5 | 108 | 3 |
| AXLE, RR. WHEEL | J11 | 114 | 3 |
| [ B ] | | | |
| BAG, SERVICE BOOK | K4 | 123 | 6 |
| | K6 | 125 | 6 |
| BAG, TOOL | N3 | 170 | 2 |
| BALL, STEEL, | L10 | 145 | 26 |
| BAND | M11 | 162 | 23 |
| BAND A, BATTERY | M14 | 165 | 28 |
| BAND B2, BATTERY | M9 | 160 | 11 |
| | M10 | 161 | 10 |
| BAND, INSULATOR | F2 | 52 | 6 |
| BAND, L. MUFFLER | L3 | 138 | 20 |
| | L5 | 140 | 20 |
| BAND, MUFFLER | L2 | 137 | 18 |
| | L5 | 140 | 18 |
| BAND, R. MUFFLER | L3 | 138 | 19 |
| | L5 | 140 | 19 |
| BAND, WIRE | M14 | 165 | 22 |
| | | | 23 |
| | M16 | 167 | 26 |
| BAND, WIRE HARNESS | M14 | 165 | 20 |
| | | | 21 |
| | M16 | 167 | 25 |
| | | | 28 |
| BAR COMP., SIDE STAND | L11 | 146 | 3 |
| BAR, CHANGE | L8 | 143 | 10 |
| BASE COMP., CONTACT | I12 | 99 | 7 |
| BASE COMP., LICENSE | M1 | 152 | 5 |
| | M3 | 154 | 3 |
| BASE COMP., L. FR. WINKER | M5 | 156 | 4 |
| BASE COMP., L. RR. WINKER | M5 | 156 | 9 |
| BASE COMP., R. FR. WINKER | M5 | 156 | 1 |
| BASE COMP., R. RR. WINKER | M5 | 156 | 6 |
| BASE, L. WINKER | M6 | 157 | 6 |
| BASE, OIL PAN DRAIN | G3 | 69 | 2 |
| BASE, R. WINKER | M6 | 157 | 2 |
| BATTERY | M9 | 160 | 1 |
| | M10 | 161 | 1 |
| BEARING A, CONNECTING ROD | G8 | 74 | 7 |
| BEARING A, NEEDLE, 35X41X23.8 | F11 | 61 | 21 |
| BEARING A, NEEDLE, 35X41X27.8 | F11 | 61 | 21 |
| BEARING B, CONNECTING ROD | G8 | 74 | 7 |
| BEARING B, CRANKSHAFT | G8 | 74 | 9 |
| BEARING B, NEEDLE, 18X27X23.8 | G9 | 75 | 18 |
| BEARING B, NEEDLE, 35X41X23.8 | F11 | 61 | 21 |
| BEARING B, NEEDLE, 35X41X27.8 | F11 | 61 | 21 |
| BEARING C, CONNECTING ROD | G8 | 74 | 7 |
| BEARING C, CRANKSHAFT | G8 | 74 | 9 |
| BEARING C, NEEDLE, 18X27X23.8 | G9 | 75 | 18 |
| BEARING C, NEEDLE, 35X41X23.8 | F11 | 61 | 21 |
| BEARING C, NEEDLE, 35X41X27.8 | F11 | 61 | 21 |
| BEARING D, CONNECTING ROD | G8 | 74 | 7 |
| BEARING D, CRANKSHAFT | G9 | 75 | 9 |
| BEARING D, NEEDLE, 18X27X23.8 | G9 | 75 | 18 |
| BEARING E, CONNECTING ROD | G8 | 74 | 7 |
| BEARING E, CRANKSHAFT | G9 | 75 | 9 |
| BEARING F, CRANKSHAFT | G9 | 75 | 9 |
| BEARING, BALL, 16005 | G14 | 80 | 19 |
| BEARING, EX. VALVE | L2 | 137 | 6 |
| | L5 | 140 | 6 |
| BEARING, HEAD PIPE UNDER | I15 | 102 | 12 |
| BEARING, HEAD PIPE UPPER | I15 | 102 | 11 |
| BEARING, NEEDLE | G1 | 67 | 23 |
| BEARING, NEEDLE, 17X24X17 | L16 | 151 | 18 |
| BEARING, NEEDLE, 19X26X15 | L16 | 151 | 19 |
| BEARING, NEEDLE, 24X28X10 | G12 | 78 | 37 |
| BEARING, NEEDLE, 30X35X20 | F13 | 63 | 12 |
| BEARING, NEEDLE, 32X42X20 | L14 | 149 | 27 |
| BEARING, NEEDLE, 32X42X37 | L14 | 149 | 28 |
| BEARING, RADIAL BALL, | J12 | 115 | 22 |
| BEARING, RADIAL BALL, 16003 | F11 | 61 | 20 |
| BEARING, RADIAL BALL, 28X52X12 | J12 | 115 | 20 |
| BEARING, RADIAL BALL, 28X62X16 | G11 | 77 | 33 |
| BEARING, RADIAL BALL, 6005 | J6 | 109 | 13 |
| | J12 | 115 | 21 |
| BEARING, RADIAL BALL, 6804 | G13 | 79 | 18 |
| BEARING, RADIAL BALL, 6905 | L14 | 149 | 26 |
| BEARING, SPECIAL BALL, 35X72X17 | G11 | 77 | 36 |
| BEARING, SPECIAL, 20X47X15.5 | G11 | 77 | 34 |
| BEARING, SPECIAL, 20X52X15 | G11 | 77 | 35 |
| BEARING, SPHERICAL, 10 | L16 | 151 | 20 |
| BODY ASSY., FRAME | N1 | 168 | 2 |
| BODY ASSY., THROTTLE | H1 | 83 | 9 |
| BODY SET, FRAME | N1 | 168 | 2 |
| BODY, INJECTOR | H3 | 85 | 4 |
| BODY, VALVE GUIDE | M11 | 162 | 2 |
| | M12 | 163 | 2 |
| BOLT-WASHER, 4X8 | G5 | 71 | 16 |
| BOLT-WASHER, 6X12 | F9 | 59 | 7 |
| | G3 | 69 | 17 |
| | G13 | 79 | 14 |
| | N5 | 172 | 33 |
| | N7 | 174 | 31 |
| BOLT-WASHER, 6X18 | H1 | 83 | 14 |
| BOLT-WASHER, 6X25 | N5 | 172 | 34 |
| | N7 | 174 | 32 |
| BOLT-WASHER, 6X32 | F11 | 61 | 15 |
| BOLT-WASHER, 9X105 | F2 | 52 | 12 |
| BOLT, 10X30 | J12 | 115 | 15 |
| BOLT, 8X45 | I15 | 102 | 8 |
| BOLT, ADJUSTING, 20X51.5 | N2 | 169 | 29 |
| BOLT, ADJUSTING, 20X68.5 | N2 | 169 | 28 |
| BOLT, BANJO, 12MM | J16 | 119 | 26 |
| BOLT, BRAKE DISK, 8X24 | J12 | 115 | 14 |
| BOLT, CAP, 6X50 | L9 | 144 | 20 |
| BOLT, CHAIN SLIDER | L13 | 148 | 20 |
| BOLT, CHANGE PIVOT | L8 | 143 | 11 |
| BOLT, CONNECTING ROD | G8 | 74 | 6 |
| BOLT, DISK, 6X17 | J6 | 109 | 11 |
| BOLT, DRAIN PLUG, 12MM | G3 | 69 | 15 |
| BOLT, FLANGE KNOCK, 6X9 | F6 | 56 | 14 |
| BOLT, FLANGE KNOCK, 7X10.5 | F8 | 58 | 11 |
| BOLT, FLANGE SOCKET, 10X38 | N2 | 169 | 24 |
| BOLT, FLANGE SOCKET, 6X12 | M14 | 165 | 18 |
| BOLT, FLANGE SOCKET, 6X16 | F2 | 52 | 16 |
| BOLT, FLANGE SOCKET, 6X28 | M16 | 167 | 21 |
| BOLT, FLANGE SOCKET, 8X40 | I13 | 100 | 24 |
| BOLT, FLANGE, 10X113 | L15 | 150 | 15 |
| BOLT, FLANGE, 10X35 | F15 | 65 | 4 |
| BOLT, FLANGE, 10X57 | J4 | 107 | 14 |
| | L15 | 150 | 13 |
| BOLT, FLANGE, 10X62 | J4 | 107 | 14 |
| BOLT, FLANGE, 10X75 | L15 | 150 | 16 |
| BOLT, FLANGE, 12X50 | N2 | 169 | 32 |
| BOLT, FLANGE, 12X55 | N2 | 169 | 30 |
| BOLT, FLANGE, 12X60 | N2 | 169 | 33 |
| BOLT, FLANGE, 12X70 | N2 | 169 | 31 |
| BOLT, FLANGE, 5X14 | H3 | 85 | 7 |
| BOLT, FLANGE, 5X8 | M11 | 162 | 17 |
| | M12 | 163 | 12 |
| | | | 20 |
| BOLT, FLANGE, 6MM | I15 | 102 | 7 |
| | L13 | 148 | 19 |
| | N5 | 172 | 30 |
| | N7 | 174 | 29 |
| BOLT, FLANGE, 6X10 | F8 | 58 | 9 |
| | I10 | 97 | 26 |
| | L8 | 143 | 20 |
| | M11 | 162 | 20 |
| | | | 21 |
| | N5 | 172 | 39 |
| BOLT, FLANGE, 6X12 | F3 | 53 | 24 |
| | F15 | 65 | 5 |
| | G12 | 78 | 39 |
| | H1 | 83 | 7 |
| | H3 | 85 | 15 |
| | I7 | 94 | 28 |
| | | | 36 |
| | K11 | 130 | 25 |
| | L1 | 136 | 9 |
| | M14 | 165 | 29 |
| | | | 30 |
| | M16 | 167 | 32 |
| | N16 | 183 | 20 |
| | 2-B4 | 187 | 15 |
| | | | 16 |
| | | | 17 |
| | 2-B6 | 189 | 29 |
| BOLT, FLANGE, 6X14 | F8 | 58 | 17 |
| | F9 | 59 | 11 |
| | G6 | 72 | 37 |
| | K11 | 130 | 26 |
| | | | 27 |
| | K16 | 135 | 26 |


5

# PART NAME INDEX


| Part name | Address | Page | Ref. |
|---|---|---|---|
| BOLT, FLANGE, 6X14 | N2 | 169 | 40 |
| BOLT, FLANGE, 6X16 | G3 | 69 | 13 |
| | G14 | 80 | 21 |
| | I7 | 94 | 40 |
| BOLT, FLANGE, 6X18 | F3 | 53 | 22 |
| | G3 | 69 | 12 |
| | G6 | 72 | 38 |
| | G9 | 75 | 21 |
| | I7 | 94 | 40 |
| | I14 | 101 | 10 |
| | J8 | 111 | 27 |
| | L13 | 148 | 17 |
| | N2 | 169 | 40 |
| BOLT, FLANGE, 6X20 | G1 | 67 | 30 |
| | G7 | 73 | 39 |
| | G16 | 82 | 19 |
| | I14 | 101 | 14 |
| | L4 | 139 | 47 |
| | L7 | 142 | 49 |
| | L8 | 143 | 9 |
| | M2 | 153 | 32 |
| | M4 | 155 | 28 |
| | N5 | 172 | 41 |
| | N7 | 174 | 35 |
| | 2-B6 | 189 | 30 |
| | 2-B7 | 190 | 16 |
| BOLT, FLANGE, 6X22 | F1 | 51 | 8 |
| | I7 | 94 | 41 |
| | I10 | 97 | 25 |
| | M11 | 162 | 22 |
| BOLT, FLANGE, 6X23 | G16 | 82 | 20 |
| BOLT, FLANGE, 6X25 | F8 | 58 | 18 |
| | G1 | 67 | 21 |
| | G2 | 68 | 4 |
| | G7 | 73 | 40 |
| | I14 | 101 | 15 |
| | M12 | 163 | 19 |
| | N5 | 172 | 40 |
| | N7 | 174 | 36 |
| BOLT, FLANGE, 6X28 | F9 | 59 | 6 |
| | F14 | 64 | 2 |
| | G1 | 67 | 19 |
| | G7 | 73 | 41 |
| | I7 | 94 | 42 |
| BOLT, FLANGE, 6X32 | G1 | 67 | 20 |
| BOLT, FLANGE, 6X35 | G3 | 69 | 14 |
| | G16 | 82 | 24 |
| | K1 | 120 | 33 |
| | L4 | 139 | 48 |
| | L7 | 142 | 50 |
| | | | 51 |
| BOLT, FLANGE, 6X39.5 | F2 | 52 | 14 |
| BOLT, FLANGE, 6X40 | G1 | 67 | 31 |
| | G4 | 70 | 23 |
| BOLT, FLANGE, 6X45 | F3 | 53 | 23 |
| | G1 | 67 | 29 |
| BOLT, FLANGE, 6X45.5 | F2 | 52 | 13 |
| BOLT, FLANGE, 6X50 | G4 | 70 | 24 |
| BOLT, FLANGE, 6X65 | G1 | 67 | 32 |
| BOLT, FLANGE, 6X75 | G1 | 67 | 33 |
| BOLT, FLANGE, 6X8 | H3 | 85 | 14 |
| | M11 | 162 | 19 |
| BOLT, FLANGE, 7X40 | G6 | 72 | 21 |
| BOLT, FLANGE, 7X60 | G6 | 72 | 22 |
| BOLT, FLANGE, 7X80 | G6 | 72 | 23 |
| BOLT, FLANGE, 8X12 | I15 | 102 | 13 |
| BOLT, FLANGE, 8X22 | I14 | 101 | 16 |
| | N2 | 169 | 41 |
| BOLT, FLANGE, 8X25 | G9 | 75 | 22 |
| BOLT, FLANGE, 8X28 | N10 | 177 | 12 |
| | N11 | 178 | 14 |
| BOLT, FLANGE, 8X30 | G6 | 72 | 25 |
| | L4 | 139 | 46 |
| | L7 | 142 | 48 |
| BOLT, FLANGE, 8X32 | L4 | 139 | 49 |
| | L7 | 142 | 52 |
| BOLT, FLANGE, 8X35 | L3 | 138 | 32 |
| | L6 | 141 | 32 |
| BOLT, FLANGE, 8X40 | G7 | 73 | 42 |
| BOLT, FLANGE, 8X45 | J2 | 105 | 24 |
| | L4 | 139 | 50 |
| BOLT, FLANGE, 8X49 | J9 | 112 | 16 |
| BOLT, FLANGE, 8X55 | G7 | 73 | 43 |
| BOLT, FLANGE, 9X105 | G6 | 72 | 19 |
| BOLT, FLANGE, 9X125 | G6 | 72 | 20 |
| BOLT, FR. AXLE | J6 | 109 | 12 |
| BOLT, FR. DISK COVER | K10 | 129 | 16 |
| | K15 | 134 | 20 |
| BOLT, FR. FORK | J1 | 104 | 13 |
| BOLT, HANDLE LEVER | I7 | 94 | 27 |
| BOLT, HANDLE LEVER PIVOT | I9 | 96 | 17 |
| BOLT, HEAD COVER | F1 | 51 | 7 |
| BOLT, HEX. CAP, 6X18 | I7 | 94 | 36 |
| BOLT, HEX., 5X14 | K10 | 129 | 18 |
| BOLT, HEX., 8X50 | L13 | 148 | 18 |
| BOLT, KNOCK, 6X10 | F6 | 56 | 14 |
| BOLT, OIL, 10X22 | I7 | 94 | 29 |
| | I9 | 96 | 18 |
| | J7 | 110 | 19 |
| BOLT, ONE-WAY, 8MM | I13 | 100 | 23 |
| BOLT, PIN | J9 | 112 | 7 |
| | J10 | 113 | 6 |
| BOLT, RECESSED, 5X22 | F2 | 52 | 11 |
| BOLT, R. PIVOT ADJUSTING | L13 | 148 | 10 |
| BOLT, SEALING, 20MM | G5 | 71 | 10 |
| BOLT, SEALING, 22MM | G6 | 72 | 24 |
| BOLT, SEALING, 6MM | H3 | 85 | 8 |
| BOLT, SERVO MOTOR CASE, 6X28 | M12 | 163 | 13 |
| BOLT, SETTING | G2 | 68 | 7 |
| BOLT, SIDE STAND PIVOT | L11 | 146 | 5 |
| BOLT, SOCKET, 10MM | G5 | 71 | 18 |
| | G6 | 72 | 18 |
| BOLT, SOCKET, 10X136 | L15 | 150 | 12 |
| BOLT, SOCKET, 10X28 | L11 | 146 | 9 |
| BOLT, SOCKET, 10X35 | J2 | 105 | 25 |
| BOLT, SOCKET, 10X80 | L15 | 150 | 14 |
| BOLT, SOCKET, 4X21 | J16 | 119 | 24 |
| BOLT, SOCKET, 5X9 | M9 | 160 | 10 |
| BOLT, SOCKET, 5X9 | M10 | 161 | 9 |
| BOLT, SOCKET, 6X12 | K3 | 122 | 15 |
| BOLT, SOCKET, 6X13 | N10 | 177 | 14 |
| | N12 | 179 | 15 |
| BOLT, SOCKET, 6X20 | J7 | 110 | 18 |
| BOLT, SOCKET, 6X22 | M14 | 165 | 19 |
| BOLT, SOCKET, 6X28 | F15 | 65 | 7 |
| BOLT, SOCKET, 8X12 | G7 | 73 | 44 |
| BOLT, SOCKET, 8X16 | N2 | 169 | 27 |
| BOLT, SOCKET, 8X20 | G14 | 80 | 23 |
| BOLT, SOCKET, 8X22 | L9 | 144 | 18 |
| | N2 | 169 | 41 |
| BOLT, SOCKET, 8X30 | J7 | 110 | 17 |
| BOLT, SPECIAL, 10MM | G11 | 77 | 19 |
| BOLT, SPECIAL, 10X25 | F13 | 63 | 7 |
| BOLT, SPECIAL, 10X41.5 | N2 | 169 | 25 |
| BOLT, SPECIAL, 12X280 | N2 | 169 | 23 |
| BOLT, SPECIAL, 12X311 | N2 | 169 | 22 |
| BOLT, SPECIAL, 4X8 | L3 | 138 | 33 |
| | L6 | 141 | 33 |
| BOLT, SPECIAL, 5X13 | I14 | 101 | 9 |
| BOLT, SPECIAL, 6MM | M2 | 153 | 24 |
| | M3 | 154 | 19 |
| BOLT, SPECIAL, 6X16 | K12 | 131 | 8 |
| | L11 | 146 | 6 |
| BOLT, SPECIAL, 6X22 | J14 | 117 | 14 |
| | K4 | 123 | 13 |
| | K6 | 125 | 15 |
| | N2 | 169 | 21 |
| BOLT, SPECIAL, 7X42.5 | G5 | 71 | 17 |
| BOLT, SPECIAL, 8MM | N2 | 169 | 26 |
| BOLT, SPROCKET FIXING | J16 | 119 | 25 |
| BOLT, STUD, 8X24 | F2 | 52 | 15 |
| BOLT, SWINGARM PIVOT | L13 | 148 | 8 |
| BOLT, TORX, 6X32 | F8 | 58 | 12 |
| BOLT, TORX, 8X40 | J4 | 107 | 15 |
| BOLT, WASHER, 6X14 | N7 | 174 | 37 |
| BOOT B | J9 | 112 | 15 |
| | J10 | 113 | 14 |
| BOOT COMP. | I6 | 93 | 12 |
| | I9 | 96 | 12 |
| | J7 | 110 | 4 |
| BOOT, PIN BUSH | J10 | 113 | 13 |
| BOOT, SLEEVE | J9 | 112 | 8 |
| BOSS, OIL FILTER | G3 | 69 | 16 |
| BRACKET COMP., CONNECTOR | G5 | 71 | 12 |
| BRACKET COMP., SIDE STAND | L11 | 146 | 2 |
| BRACKET SUB ASSY., RR. | J10 | 113 | 8 |
| BRACKET, RESERVE TANK | N4 | 171 | 16 |
| BRACKET, RR. BRAKE | J9 | 112 | 5 |
| BRACKET, R. CONNECTER | M15 | 166 | 4 |
| BRACKET, SEAT HOOK | K4 | 123 | 7 |
| | K6 | 125 | 7 |
| BRIDGE, FORK TOP | I13 | 100 | 21 |
| BULB | I1 | 88 | 10 |
| | M1 | 152 | 2 |
| | M3 | 154 | 1 |
| BULB, HEADLIGHT | I1 | 88 | 11 |
| BULB, WINKER | M5 | 156 | 10 |

# PART NAME INDEX


| Part name | Address | Page | Ref. |
|---|---|---|---|
| BULB, WINKER | M6 | 157 | 18 |
| BUSH | I9 | 96 | 2 |
| BUSH, GUIDE | J1 | 104 | 7 |
| BUSH, ORIFICE | G5 | 71 | 5 |
| BUSH, SLIDER | J1 | 104 | 8 |
| [ C ] | | | |
| CABLE COMP. A, EX. VALVE | M11 | 162 | 9 |
| | M12 | 163 | 7 |
| CABLE COMP. A, THROTTLE | I5 | 92 | 1 |
| CABLE COMP. B, EX. VALVE | M11 | 162 | 10 |
| | M12 | 163 | 8 |
| CABLE COMP. B, THROTTLE | I5 | 92 | 2 |
| CABLE, BATTERY EARTH | M9 | 160 | 7 |
| | M10 | 161 | 6 |
| CABLE, SEAT LOCK | K3 | 122 | 7 |
| CABLE, STARTER BATTERY | M9 | 160 | 2 |
| | M10 | 161 | 2 |
| CABLE, STARTER MOTOR | M9 | 160 | 4 |
| | M10 | 161 | 3 |
| CALIPER SUB ASSY., L. FR. | J3 | 106 | 10 |
| CALIPER SUB ASSY., RR. | J9 | 112 | 9 |
| | J10 | 113 | 7 |
| CALIPER SUB ASSY., R. FR. | J4 | 107 | 12 |
| CAMSHAFT COMP., EX. | F4 | 54 | 3 |
| CAMSHAFT COMP., IN. | F4 | 54 | 2 |
| CAP | M11 | 162 | 13 |
| CAP COMP., FUEL FILLER | J16 | 119 | 20 |
| CAP COMP., RADIATOR | N4 | 171 | 7 |
| | N6 | 173 | 7 |
| CAP, 45MM | F9 | 59 | 2 |
| CAP, BLEEDER | F16 | 66 | 18 |
| | I6 | 93 | 3 |
| | J3 | 106 | 8 |
| | J9 | 112 | 12 |
| | J10 | 113 | 11 |
| CAP, CLUTCH OIL CUP | I9 | 96 | 6 |
| CAP, DUMMY | M14 | 165 | 33 |
| | | | 34 |
| | M15 | 166 | 9 |
| | | | 10 |
| CAP, EX. VALVE | L2 | 137 | 5 |
| | L5 | 140 | 5 |
| CAP, MASTER CYLINDER | J7 | 110 | 11 |
| CAP, OIL CUP | I6 | 93 | 17 |
| | I7 | 94 | 44 |
| CAP, OIL FILLER | F9 | 59 | 3 |
| CAP, RESERVE TANK | N4 | 171 | 13 |
| | N6 | 173 | 15 |
| CAP, SOCKET BOLT, 10MM | N2 | 169 | 36 |
| CARTRIDGE, OIL FILTER | G3 | 69 | 10 |
| CASE ASSY., UPPER | I3 | 90 | 6 |
| CASE A, DRIVE CHAIN | L12 | 147 | 3 |
| CASE B, DRIVE CHAIN | L12 | 147 | 4 |
| CASE COMP., AIR CLEANER LOWER | K8 | 127 | 3 |
| | K13 | 132 | 4 |
| CASE COMP., AIR CLEANER MIDDLE | K8 | 127 | 9 |
| | K13 | 132 | 10 |
| CASE, SERVO MOTOR | K6 | 125 | 9 |
| CASE, THERMOSTAT | G15 | 81 | 4 |
| CASE, UNDER | I3 | 90 | 4 |
| CENTER COMP., SHIFT DRUM | G13 | 79 | 5 |
| CENTER, CLUTCH | F10 | 60 | 5 |
| CHAIN KIT, DRIVE | L12 | 147 | 2 |
| CHAIN SET, DRIVE | L12 | 147 | 1 |
| CHAIN, CAM | F8 | 58 | 2 |
| CHAIN, OIL PUMP | G3 | 69 | 5 |
| CIRCLIP | I7 | 94 | 34 |
| | I10 | 97 | 21 |
| | J7 | 110 | 14 |
| CIRCLIP, 28MM | G11 | 77 | 31 |
| CIRCLIP, 30MM | G11 | 77 | 32 |
| CIRCLIP, EXTERNAL, 14MM | G14 | 80 | 20 |
| CIRCLIP, EXTERNAL, 15MM | L8 | 143 | 18 |
| CIRCLIP, INTERNAL, 45MM | L14 | 149 | 31 |
| CIRCLIP, INTERNAL, 63MM | F13 | 63 | 13 |
| CIRCLIP, RR. MASTER CYLINDER | I6 | 93 | 6 |
| CLAMPER A, FR. BRAKE HOSE | I6 | 93 | 9 |
| CLAMPER B, FR. BRAKE HOSE | I6 | 93 | 10 |
| CLAMPER, RR. BRAKE HOSE | J7 | 110 | 2 |
| CLAMP A, WATER HOSE | G15 | 81 | 8 |
| | N5 | 172 | 25 |
| | N6 | 173 | 23 |
| CLAMP, A.C. GENERATOR CORD | F15 | 65 | 1 |
| CLAMP, CLUTCH PIPE RR. | I9 | 96 | 10 |
| CLAMP, HOSE | H2 | 84 | 27 |
| CLAMP, HOSE, 25MM | N4 | 171 | 23 |
| | N6 | 173 | 21 |
| CLAMP, HOSE, 30-37MM | G15 | 81 | 11 |
| | N5 | 172 | 29 |
| | N7 | 174 | 28 |
| CLAMP, MASTER CYLINDER OIL HOSE | I6 | 93 | 4 |
| | J7 | 110 | 8 |
| CLAMP, OVER FLOW | N4 | 171 | 17 |
| CLAMP, RADIATOR HOSE | G15 | 81 | 9 |
| CLAMP, WATER HOSE, 25MM | G15 | 81 | 7 |
| | | | 8 |
| CLIP | K8 | 127 | 20 |
| | K13 | 132 | 20 |
| CLIP B20, DRAIN TUBE | K12 | 131 | 1 |
| CLIP B, TUBE | K1 | 120 | 34 |
| CLIP, 2X60 | G7 | 73 | 45 |
| | K1 | 120 | 38 |
| | M2 | 153 | 27 |
| | M4 | 155 | 22 |
| CLIP, 4X50 | F9 | 59 | 5 |
| CLIP, AIR HOSE, 16MM | K8 | 127 | 21 |
| | K13 | 132 | 21 |
| CLIP, AIR HOSE, 21.5 | M11 | 162 | 8 |
| CLIP, BODY | K7 | 126 | 22 |
| | 2-B6 | 189 | 27 |
| | 2-B7 | 190 | 15 |
| CLIP, BODY COVER | K5 | 124 | 19 |
| | K7 | 126 | 21 |
| | L14 | 149 | 25 |
| | 2-B4 | 187 | 14 |
| CLIP, BODY COVER | 2-B6 | 189 | 26 |
| | 2-B7 | 190 | 14 |
| CLIP, BREATHER TUBE | K8 | 127 | 17 |
| | K12 | 131 | 6 |
| | L1 | 136 | 5 |
| CLIP, COUPLER | I2 | 89 | 14 |
| | M12 | 163 | 15 |
| | M14 | 165 | 26 |
| | M16 | 167 | 29 |
| CLIP, HARNESS BAND | I5 | 92 | 11 |
| | I13 | 100 | 28 |
| | M14 | 165 | 25 |
| | M16 | 167 | 28 |
| CLIP, PANEL FIXING | I14 | 101 | 13 |
| | K10 | 129 | 17 |
| | K15 | 134 | 22 |
| | N5 | 172 | 32 |
| | 2-B6 | 189 | 28 |
| CLIP, PISTON PIN, 17MM | G8 | 74 | 4 |
| CLIP, PULSER CORD | I2 | 89 | 17 |
| | N2 | 169 | 43 |
| CLIP, SPLASH SHIELD | K5 | 124 | 18 |
| | K7 | 126 | 20 |
| CLIP, SUB TANK HOSE | K8 | 127 | 17 |
| | K12 | 131 | 6 |
| | K13 | 132 | 17 |
| | L1 | 136 | 6 |
| CLIP, SWITCH COVER | L8 | 143 | 15 |
| CLIP, TUBE | N5 | 172 | 36 |
| | | | 37 |
| | N7 | 174 | 33 |
| | | | 34 |
| CLIP, WIRE HARNESS | G1 | 67 | 34 |
| | G16 | 82 | 22 |
| | M14 | 165 | 24 |
| | M16 | 167 | 27 |
| CLIP, WIRE, 2X40 | M4 | 155 | 27 |
| CLUTCH, ONE WAY | F13 | 63 | 5 |
| COIL, CAP & IGNITION | M13 | 164 | 1 |
| | M15 | 166 | 1 |
| COLLAR | L3 | 138 | 31 |
| | L6 | 141 | 30 |
| | L13 | 148 | 15 |
| | M8 | 159 | 4 |
| | M13 | 164 | 11 |
| | M16 | 167 | 12 |
| COLLAR A, CUSHION ARM | L15 | 150 | 6 |
| COLLAR A, ENGINE HANGER | N1 | 168 | 9 |
| | N2 | 169 | 11 |
| COLLAR B, ENGINE HANGER | N1 | 168 | 9 |
| COLLAR B, RR. WHEEL DISTANCE | J11 | 114 | 8 |
| COLLAR C, ENGINE HANGER | N1 | 168 | 10 |
| COLLAR D, CUSHION | L15 | 150 | 2 |
| COLLAR, 28X13 | G10 | 76 | 14 |
| COLLAR, 30X9.5 | G10 | 76 | 7 |
| COLLAR, 6MM | F8 | 58 | 8 |
| COLLAR, 6.3X13 | I7 | 94 | 25 |
| | L3 | 138 | 28 |
| | L6 | 141 | 27 |

# PART NAME INDEX


| Part name | Address | Page | Ref. |
|---|---|---|---|
| COLLAR, 6.3X13 | M11 | 162 | 15 |
| COLLAR, 6.3X14.5 | M12 | 163 | 14 |
| COLLAR, 8X18 | L3 | 138 | 39 |
| | L6 | 141 | 40 |
| COLLAR, 8.5X15.5 | L5 | 140 | 12 |
| COLLAR, BEARING SIDE | L15 | 150 | 4 |
| COLLAR, CHAIN CASE | M3 | 154 | 8 |
| COLLAR, CHAIN GUARD | M1 | 152 | 20 |
| COLLAR, CHAMBER MOUNTING | L3 | 138 | 26 |
| COLLAR, CHAMBER RR. | L2 | 137 | 12 |
| COLLAR, CONNECTING ROD PIVOT | L15 | 150 | 8 |
| COLLAR, CUSHION ARM | L15 | 150 | 3 |
| COLLAR, FAN COVER | N1 | 168 | 1 |
| COLLAR, FENDER SETTING | L3 | 138 | 29 |
| | L6 | 141 | 28 |
| | M1 | 152 | 12 |
| | M3 | 154 | 10 |
| COLLAR, FR. TANK SETTING | J16 | 119 | 7 |
| COLLAR, FR. WHEEL DISTANCE | J5 | 108 | 6 |
| COLLAR, GEARSHIFT LEVER SETTING | K3 | 122 | 11 |
| COLLAR, LICENSE LIGHT | M1 | 152 | 4 |
| COLLAR, L. FR. WHEEL SIDE | J5 | 108 | 5 |
| COLLAR, L. PIVOT DISTANCE | L13 | 148 | 11 |
| COLLAR, L. RR. AXLE | L12 | 147 | 6 |
| COLLAR, MUFFLER | L5 | 140 | 11 |
| COLLAR, OIL PUMP SPROCKET | F10 | 60 | 3 |
| COLLAR, O-RING | G3 | 69 | 8 |
| COLLAR, RADIATOR MOUNTING | N4 | 171 | 11 |
| | N6 | 173 | 12 |
| COLLAR, REGULATOR MOUNTING | M3 | 154 | 6 |
| COLLAR, RR. AXLE DISTANCE | J11 | 114 | 7 |
| COLLAR, RR. BRAKE SIDE | J11 | 114 | 5 |
| COLLAR, RR. SWINGARM PIVOT DISTANCE | L13 | 148 | 9 |
| COLLAR, RR. TANK SETTING | J16 | 119 | 8 |
| COLLAR, RR. WHEEL SIDE | J11 | 114 | 4 |
| COLLAR, R. FR. WHEEL SIDE | J5 | 108 | 4 |
| COLLAR, R. PIVOT DISTANCE | L13 | 148 | 12 |
| COLLAR, R. RR. AXLE | L12 | 147 | 7 |
| | L13 | 148 | 7 |
| COLLAR, SHIFT DRUM | G13 | 79 | 4 |
| COLLAR, SIDE MOUNTING | M3 | 154 | 16 |
| COLLAR, SPLINE, 28X13.5 | G10 | 76 | 12 |
| COLLAR, SPLINE, 28X16 | G10 | 76 | 12 |
| COLLAR, SPLINE, 30X11 | G10 | 76 | 10 |
| COLLAR, SPRING | J1 | 104 | 3 |
| COLLAR, STEP LOWER | L9 | 144 | 16 |
| COLLAR, TAILLIGHT | L10 | 145 | 28 |
| COLLAR, TAILLIGHT MOUNTING | I16 | 103 | 3 |
| | J14 | 117 | 13 |
| | M1 | 152 | 20 |
| | M16 | 167 | 20 |
| COLLAR, TAILLIGHT PACKING | M1 | 152 | 4 |
| COLLAR, WINKER | M6 | 157 | 12 |
| | | | 13 |
| CONNECTOR, MASTER CYLINDER | I6 | 93 | 11 |
| | J7 | 110 | 3 |
| COOLER COMP., OIL | G3 | 69 | 11 |
| COTTER, VALVE | F4 | 54 | 11 |
| COUNTERSHAFT COMP. | G10 | 76 | 3 |
| COVER ASSY., CYLINDER HEAD | F1 | 51 | 1 |
| COVER COMP., AIR INTAKE DUCT | K10 | 129 | 7 |
| | K15 | 134 | 9 |
| COVER COMP., CHANGE | F16 | 66 | 6 |
| COVER COMP., FR. AIR CLEANER | K13 | 132 | 14 |
| COVER COMP., LICENSE | M1 | 152 | 7 |
| COVER COMP., LICENSE LIGHT | M1 | 152 | 7 |
| | M3 | 154 | 5 |
| COVER COMP., L. RR. | F16 | 66 | 3 |
| COVER COMP., MUFFLER RR. | L2 | 137 | 15 |
| COVER COMP., RR. AIR CLEANER | K13 | 132 | 15 |
| COVER COMP., STEERING DAMPER | I14 | 101 | 6 |
| COVER, AIR CLEANER | K8 | 127 | 10 |
| | K13 | 132 | 11 |
| COVER, A.C. GENERATOR | F14 | 64 | 1 |
| COVER, BATTERY TERMINAL | M9 | 160 | 5 |
| | M10 | 161 | 4 |
| COVER, COMBINATION SWITCH | I12 | 99 | 8 |
| COVER, COUPLER | K5 | 124 | 21 |
| COVER, DUST | I6 | 93 | 13 |
| | J7 | 110 | 16 |
| COVER, L. AIR INTAKE | N9 | 176 | 5 |
| COVER, L. FENDER A STAY | M1 | 152 | 16 |
| COVER, L. FR. SIDE | J14 | 117 | 12 |
| COVER, L. REED VALVE | F1 | 51 | 3 |
| COVER, MUFFLER UPPER | L5 | 140 | 17 |
| COVER, RUBBER | I1 | 88 | 4 |
| COVER, R. | F9 | 59 | 1 |
| COVER, R. AIR INTAKE | N9 | 176 | 4 |
| COVER, R. FENDER A STAY | M1 | 152 | 15 |
| COVER, R. FR. SIDE | J14 | 117 | 11 |
| COVER, R. REED VALVE | F1 | 51 | 2 |
| COVER, STARTER MAGNETIC TERMINAL | M9 | 160 | 3 |
| COVER, STARTER MOTOR TERMINAL | M9 | 160 | 6 |
| | M10 | 161 | 5 |
| COVER, TAILLIGHT | M8 | 159 | 3 |
| COVER, THERMOSTAT | G15 | 81 | 6 |
| COVER, VALVE GUIDE | M11 | 162 | 3 |
| | M12 | 163 | 3 |
| COVER, WATER PUMP | F16 | 66 | 10 |
| COWL COMP., UPPER | N9 | 176 | 3 |
| COWL SET, L. MIDDLE | N15 | 182 | 5 |
| | N16 | 183 | 5 |
| | | | 6 |
| | 2-B3 | 186 | 3 |
| | 2-B4 | 187 | 3 |
| COWL SET, L. UNDER | 2-B6 | 189 | 16 |
| | | | 17 |
| | 2-B7 | 190 | 5 |
| COWL SET, RR. SEAT | K4 | 123 | 2 |
| | K6 | 125 | 2 |
| COWL SET, R. MIDDLE | N13 | 180 | 3 |
| | N14 | 181 | 3 |
| | | | 4 |
| | N15 | 182 | 4 |
| | 2-B2 | 185 | 2 |
| COWL SET, R. MIDDLE | 2-B3 | 186 | 2 |
| COWL SET, R. UNDER | 2-B5 | 188 | 10 |
| | 2-B6 | 189 | 10 |
| | | | 11 |
| | 2-B7 | 190 | 4 |
| COWL SET, UPPER | N10 | 177 | 17 |
| | N11 | 178 | 1 |
| | | | 2 |
| | | | 3 |
| COWL, INNER LOWER | 2-B6 | 189 | 21 |
| | 2-B7 | 190 | 10 |
| COWL, L. INNER MIDDLE | 2-B5 | 188 | 3 |
| | 2-B7 | 190 | 3 |
| COWL, R. INNER MIDDLE | 2-B5 | 188 | 1 |
| | 2-B7 | 190 | 2 |
| CRANKCASE SET | G5 | 71 | 1 |
| CRANKSHAFT | G8 | 74 | 8 |
| CUP COMP., OIL | I6 | 93 | 15 |
| | I7 | 94 | 43 |
| | I9 | 96 | 4 |
| | J7 | 110 | 6 |
| CUSHION ASSY., RR. | L15 | 150 | 1 |
| CUSHION B, FUEL TANK | J16 | 119 | 14 |
| CUSHION RING, INJECTOR | H1 | 83 | 13 |
| | H3 | 85 | 3 |
| CUSHION, EX. PIPE MOUNTING | L3 | 138 | 38 |
| | L6 | 141 | 39 |
| CUSHION, FUEL TANK | K1 | 120 | 36 |
| CUSHION, PGM-FI UNIT | M14 | 165 | 17 |
| CYLINDER ASSY., CLUTCH SLAVE | F16 | 66 | 13 |
| CYLINDER SET, MASTER | I6 | 93 | 22 |
| CYLINDER SUB ASSY., CLUTCH MASTER | I9 | 96 | 7 |
| CYLINDER SUB ASSY., FR. MASTER | I6 | 93 | 14 |
| CYLINDER SUB ASSY., RR. MASTER | J7 | 110 | 5 |
| [ D ] | | | |
| DAMPER ASSY., STEERING | I14 | 101 | 4 |
| DAMPER COMP., FR. | J1 | 104 | 11 |
| DAMPER SET, WHEEL | J11 | 114 | 1 |
| DIAPHRAGM | I6 | 93 | 20 |
| | I7 | 94 | 45 |
| | I9 | 96 | 5 |
| | J7 | 110 | 12 |
| DIAPHRAGM, CONTROL VALVE | K10 | 129 | 3 |
| | K15 | 134 | 3 |
| DIODE ASSY., THREE WAY | M13 | 164 | 6 |
| | M15 | 166 | 5 |
| DISK COMP., L. FR. BRAKE | J6 | 109 | 10 |
| DISK COMP., R. FR. BRAKE | J6 | 109 | 9 |
| DISK, CLUTCH FRICTION | F10 | 60 | 6 |
| | | | 7 |
| DISK, RR. BRAKE | J12 | 115 | 13 |
| DOWEL PIN, 10X16 | F3 | 53 | 21 |
| | F9 | 59 | 8 |
| | G6 | 72 | 30 |
| DOWEL PIN, 8X10 | G1 | 67 | 27 |
| DOWEL PIN, 8X14 | F1 | 51 | 10 |

# PART NAME INDEX


| Part name | Address | Page | Ref. |
|---|---|---|---|
| DOWEL PIN, 8X14 | F14 | 64 | 3 |
| | G1 | 67 | 28 |
| | G4 | 70 | 22 |
| | G6 | 72 | 29 |
| DOWEL PIN, 8X20 | F2 | 52 | 20 |
| DRIVER 1, PLUS SCREW | N3 | 170 | 11 |
| DRIVER 3, MINUS SCREW | N3 | 170 | 12 |
| DRUM COMP., GEARSHIFT | G13 | 79 | 3 |
| DUCT COMP., AIR INTAKE | K10 | 129 | 5 |
| | K15 | 134 | 7 |
| DUCT COMP., L. SEAT COWL | K4 | 123 | 5 |
| | K6 | 125 | 5 |
| DUCT COMP., R. SEAT COWL | K4 | 123 | 4 |
| | K6 | 125 | 4 |
| DUST SEAL | J2 | 105 | 26 |
| DUST SEAL, 16X26X3 | L16 | 151 | 23 |
| DUST SEAL, 17X24X5 | L16 | 151 | 21 |
| DUST SEAL, 31X47X7 | J6 | 109 | 14 |
| DUST SEAL, 32X42X6 | L14 | 149 | 30 |
| DUST SEAL, 32X45X5 | L14 | 149 | 29 |
| DUST SEAL, 35X52X7.5 | J12 | 115 | 23 |
| DUST SEAL, RR. CUSHION PIVOT | L16 | 151 | 22 |
| DUST SEAL, STEERING HEAD | I15 | 102 | 2 |
| | | | 3 |
| [ E ] | | | |
| ELEMENT, AIR CLEANER | K8 | 127 | 1 |
| | K13 | 132 | 2 |
| EMBLEM | I12 | 99 | 9 |
| EMBLEM, PRODUCT | I14 | 101 | 8 |
| [ F ] | | | |
| FAN COMP., COOLING | N4 | 171 | 4 |
| | N6 | 173 | 4 |
| FENDER A, RR. | M1 | 152 | 11 |
| | M3 | 154 | 9 |
| FENDER COMP. B, RR. | K4 | 123 | 8 |
| | K6 | 125 | 8 |
| FENDER COMP., FR. | I16 | 103 | 1 |
| FENDER C, RR. | M1 | 152 | 19 |
| | M3 | 154 | 13 |
| FENDER SET, FR. | I16 | 103 | 5 |
| FILM A, PROTECTOR | J16 | 119 | 12 |
| FILM B, PROTECTOR | J16 | 119 | 13 |
| FILTER ASSY., SOLENOID VALVE | K10 | 129 | 12 |
| | K15 | 134 | 15 |
| FINDER COMP., OIL LEVEL | G5 | 71 | 9 |
| FLANGE SUB ASSY., RR. DRIVEN | J11 | 114 | 6 |
| FLOAT, RR. MASTER CYLINDER | I6 | 93 | 7 |
| FLYWHEEL COMP. | F15 | 65 | 2 |
| FORK ASSY., L. FR. | J2 | 105 | 20 |
| FORK ASSY., R. FR. | J1 | 104 | 1 |
| FORK, CENTER GEARSHIFT | G13 | 79 | 2 |
| FORK, GEARSHIFT | G13 | 79 | 1 |
| FUNNEL, L. AIR | K8 | 127 | 6 |
| | K13 | 132 | 7 |
| FUNNEL, R. AIR | K8 | 127 | 2 |
| FUNNEL, R. AIR | K13 | 132 | 3 |
| FUSE, BLADE | M9 | 160 | 12 |
| | M10 | 161 | 11 |
| FUSE, MINI | M9 | 160 | 13 |
| | M10 | 161 | 12 |
| | M14 | 165 | 31 |
| | | | 32 |
| | M16 | 167 | 33 |
| | | | 34 |
| [ G ] | | | |
| GASKET SHEET KIT A | H4 | 86 | 1 |
| GASKET SHEET KIT B | H5 | 87 | 1 |
| GASKET, CHANGE COVER | F16 | 66 | 7 |
| | H5 | 87 | 1 |
| GASKET, CYLINDER HEAD | F2 | 52 | 3 |
| | H4 | 86 | 1 |
| GASKET, EX. PIPE | H4 | 86 | 1 |
| | L2 | 137 | 8 |
| | L5 | 140 | 8 |
| GASKET, HEAD COVER | F1 | 51 | 5 |
| | H4 | 86 | 1 |
| GASKET, L. RR. COVER | F16 | 66 | 2 |
| | H5 | 87 | 1 |
| GASKET, PLUG HOLE | F2 | 52 | 4 |
| | H4 | 86 | 1 |
| GASKET, SEAL | I1 | 88 | 9 |
| GASKET, SLAVE CYLINDER | F16 | 66 | 14 |
| | H5 | 87 | 1 |
| GASKET, TENSIONER HOLE | F8 | 58 | 5 |
| | H4 | 86 | 1 |
| GASKET, THERMOSTAT CASE | G15 | 81 | 5 |
| | H5 | 87 | 1 |
| GASKET, WATER PUMP | F16 | 66 | 11 |
| | H5 | 87 | 1 |
| GAUGE, FEELER, 0.7MM | N3 | 170 | 3 |
| GEAR COMP., STARTER REDUCTION | F13 | 63 | 1 |
| GEAR COMP., STARTING DRIVEN | F13 | 63 | 3 |
| GEAR, BALANCER | G9 | 75 | 10 |
| GEAR, COUNTERSHAFT FIFTH | G10 | 76 | 15 |
| GEAR, COUNTERSHAFT FIRST | G10 | 76 | 4 |
| GEAR, COUNTERSHAFT FOURTH | G10 | 76 | 11 |
| GEAR, COUNTERSHAFT SECOND | G10 | 76 | 6 |
| GEAR, COUNTERSHAFT SIXTH | G11 | 77 | 17 |
| GEAR, COUNTERSHAFT THIRD | G10 | 76 | 9 |
| GEAR, MAINSHAFT FIFTH | G10 | 76 | 13 |
| GEAR, MAINSHAFT SECOND | G10 | 76 | 5 |
| GEAR, MAINSHAFT SIXTH | G11 | 77 | 16 |
| GEAR, MAINSHAFT THIRD & FOURTH | G10 | 76 | 8 |
| GEAR, STARTER IDLE | F13 | 63 | 6 |
| GENERATOR ASSY., PULSE | F9 | 59 | 4 |
| GRILLE, RADIATOR | N4 | 171 | 6 |
| GRILL, AIR INTAKE DUCT | K10 | 129 | 9 |
| | K15 | 134 | 11 |
| GRILL, RADIATOR | N6 | 173 | 6 |
| GRIP ASSY., THROTTLE | I5 | 92 | 5 |
| GRIP, L. HANDLE | I5 | 92 | 7 |
| GRIP, R. HANDLE | I5 | 92 | 6 |
| GRIP, SCREW DRIVER | N3 | 170 | 13 |
| GROMMET | M14 | 165 | 12 |
| | M16 | 167 | 13 |
| GROMMET, AIR CLEANER CASE | M1 | 152 | 1 |
| GROMMET, BRAKE HOSE | N2 | 169 | 16 |
| GROMMET, RESERVE TANK | M8 | 159 | 1 |
| GROMMET, SEAT SETTING | M11 | 162 | 16 |
| | M12 | 163 | 11 |
| GROMMET, SIDE COVER | K4 | 123 | 12 |
| | K6 | 125 | 14 |
| | L3 | 138 | 30 |
| | L6 | 141 | 29 |
| GUARD, L. RR. HEAT | M1 | 152 | 14 |
| GUARD, L. STEP | L9 | 144 | 10 |
| GUARD, R. RR. HEAT | M1 | 152 | 13 |
| GUARD, R. STEP | L9 | 144 | 3 |
| GUARD, WATER PIPE | N1 | 168 | 8 |
| GUIDE A, CAM CHAIN | F8 | 58 | 7 |
| GUIDE A, CLUTCH OUTER | F10 | 60 | 4 |
| GUIDE B, CAM CHAIN | F8 | 58 | 6 |
| GUIDE B, CLUTCH OUTER | F10 | 60 | 4 |
| GUIDE, DRAIN TUBE | F16 | 66 | 8 |
| GUIDE, FAN AIR | N4 | 171 | 18 |
| GUIDE, FUEL BREATHER TUBE | J16 | 119 | 16 |
| | K1 | 120 | 42 |
| | | | 43 |
| GUIDE, FUEL FEED HOSE | J16 | 119 | 17 |
| GUIDE, HARNESS | F2 | 52 | 10 |
| GUIDE, L. HARNESS CLAMP | I14 | 101 | 2 |
| GUIDE, L. HOOK | N2 | 169 | 18 |
| GUIDE, R. HARNESS CLAMP | I14 | 101 | 1 |
| GUIDE, R. HOOK | N2 | 169 | 17 |
| GUIDE, SPRING | I7 | 94 | 24 |
| GUIDE, VALVE | F2 | 52 | 2 |
| GUIDE, VALVE CABLE | M11 | 162 | 1 |
| | M12 | 163 | 1 |
| [ H ] | | | |
| HANDLE, EYE WRENCH, 12MM | N3 | 170 | 14 |
| HARNESS, WIRE | M13 | 164 | 7 |
| | M15 | 166 | 6 |
| HEADLIGHT ASSY. | I1 | 88 | 1 |
| HEADLIGHT UNIT COMP. | I1 | 88 | 2 |
| HEAD ASSY., CYLINDER | F2 | 52 | 1 |
| HOLDER SET, BRUSH | G2 | 68 | 8 |
| HOLDER, BALANCER SHAFT | G9 | 75 | 14 |
| HOLDER, L. MAIN STEP | L9 | 144 | 9 |
| HOLDER, L. PILLION STEP | L9 | 144 | 15 |
| HOLDER, MASTER CYLINDER | I6 | 93 | 18 |
| | I9 | 96 | 13 |
| HOLDER, R. MAIN STEP | L9 | 144 | 2 |
| HOLDER, R. PILLION STEP | L9 | 144 | 14 |
| HOLDER, SPRING | M11 | 162 | 6 |
| HOOK, L. ROPE | N2 | 169 | 20 |
| HOOK, R. ROPE | N2 | 169 | 19 |
| HOOK, SEAT CATCH | K3 | 122 | 4 |
| HORN ASSY. | I15 | 102 | 1 |
| HOSE A, CYLINDER BLOCK | G15 | 81 | 13 |

# PART NAME INDEX


| Part name | Address | Page | Ref. |
|---|---|---|---|
| HOSE A, L. RADIATOR | N4 | 171 | 22 |
| | N6 | 173 | 20 |
| HOSE A, R. RADIATOR | N4 | 171 | 19 |
| | N6 | 173 | 18 |
| HOSE A, WATER | N4 | 171 | 21 |
| HOSE B, CYLINDER BLOCK | G15 | 81 | 14 |
| HOSE B, L. RADIATOR | N5 | 172 | 27 |
| | N7 | 174 | 26 |
| HOSE COMP. A, FUEL FEED | J15 | 118 | 4 |
| | J16 | 119 | 4 |
| HOSE COMP. B, FUEL FEED | H3 | 85 | 5 |
| HOSE COMP., FR. BRAKE | I6 | 93 | 8 |
| HOSE COMP., RR. BRAKE | J7 | 110 | 1 |
| HOSE C, WATER | G16 | 82 | 16 |
| | N6 | 173 | 24 |
| HOSE D, WATER | G16 | 82 | 17 |
| HOSE E, CYLINDER BLOCK | G15 | 81 | 15 |
| HOSE, BYPASS | G15 | 81 | 12 |
| HOSE, FILLER NECK | N4 | 171 | 24 |
| | N6 | 173 | 22 |
| HOSE, MASTER CYLINDER OIL | I6 | 93 | 16 |
| HOSE, OIL COOLER | N4 | 171 | 20 |
| | N6 | 173 | 19 |
| HOSE, RR. MASTER CYLINDER | J7 | 110 | 7 |
| HOUSING, UNDER THROTTLE | I5 | 92 | 9 |
| HOUSING, UPPER THROTTLE | I5 | 92 | 8 |
| [ I ] | | | |
| INJECTOR ASSY., FUEL | H1 | 83 | 11 |
| | H3 | 85 | 1 |
| INSULATOR COMP., THROTTLE BODY | F2 | 52 | 5 |
| INSULATOR, LUGGAGE BOX | K6 | 125 | 13 |
| | 2-B6 | 189 | 22 |
| | 2-B7 | 190 | 11 |
| [ J ] | | | |
| JOINT COMP., AIR INTAKE | K10 | 129 | 4 |
| | K15 | 134 | 4 |
| JOINT, AIR FILTER | J16 | 119 | 22 |
| JOINT, DRIVE CHAIN | L12 | 147 | 5 |
| JOINT, EX. | L3 | 138 | 22 |
| | L5 | 140 | 22 |
| | L6 | 141 | 22 |
| JOINT, FIVE WAY | H2 | 84 | 16 |
| JOINT, HOSE THREE-WAY | G15 | 81 | 10 |
| | N5 | 172 | 26 |
| | N6 | 173 | 25 |
| JOINT, THREE WAY | K2 | 121 | 47 |
| JOINT, TUBE | J16 | 119 | 21 |
| | | | 22 |
| JOINT, TWO WAY | J15 | 118 | 2 |
| JOINT, WATER | G15 | 81 | 1 |
| [ K ] | | | |
| KEY SET | I11 | 98 | 5 |
| KEY, BLANK | I12 | 99 | 10 |
| KEY, BLANK | I12 | 99 | 11 |
| KEY, SEAT LOCK | K3 | 122 | 5 |
| [ L ] | | | |
| LABEL | J2 | 105 | 19 |
| LABEL, ACCESSORIES & LOADING | 2-B8 | 191 | 6 |
| | 2-B9 | 192 | 6 |
| LABEL, CHAIN ADJUSTER | 2-B8 | 191 | 5 |
| LABEL, COLOR | 2-B9 | 192 | 10 |
| | 2-B10 | 193 | 10 |
| LABEL, DRIVE | 2-B9 | 192 | 8 |
| LABEL, DRIVE CAUTION | 2-B9 | 192 | 8 |
| LABEL, DRIVE CHAIN | 2-B8 | 191 | 4 |
| LABEL, FRENCH TRANSLATION | 2-B9 | 192 | 9 |
| LABEL, FUEL CAUTION | 2-B10 | 193 | 11 |
| LABEL, LOADING | 2-B9 | 192 | 6 |
| LABEL, RADIATOR CAP | N4 | 171 | 9 |
| | N6 | 173 | 9 |
| LABEL, RR. DAMPER | L15 | 150 | 11 |
| LABEL, RR. DAMPER CAUTION | L15 | 150 | 11 |
| LABEL, TAMPER PROOF | 2-B9 | 192 | 7 |
| LABEL, TIRE | 2-B8 | 191 | 3 |
| LENS, L. WINKER | M6 | 157 | 7 |
| LENS, POSITION LIGHT | I1 | 88 | 8 |
| LENS, R. WINKER | M6 | 157 | 3 |
| LENS, WINKER | M5 | 156 | 5 |
| | | | 8 |
| LEVER ASSY., L. HANDLE | I9 | 96 | 15 |
| LEVER ASSY., R. HANDLE | I7 | 94 | 26 |
| LEVER, STARTER | H1 | 83 | 2 |
| LIFTER ASSY., TENSIONER | F8 | 58 | 4 |
| LIFTER, VALVE | F4 | 54 | 7 |
| LIGHT ASSY., LICENSE | M2 | 153 | 33 |
| | M3 | 154 | 2 |
| [ M ] | | | |
| MAINSHAFT | G10 | 76 | 1 |
| MARK | L13 | 148 | 16 |
| | 2-B11 | 194 | 4 |
| | 2-C5 | 204 | 4 |
| | | | 5 |
| MARK, ACCESSORIES & LOADING CAUTION | 2-B9 | 192 | 6 |
| MARK, DRIVE CAUTION | 2-B9 | 192 | 8 |
| MARK, FR. FENDER | 2-C3 | 202 | 1 |
| MARK, HISS | 2-B8 | 191 | 1 |
| MARK, L. MIDDLE COWL | 2-C3 | 202 | 8 |
| MARK, L. TOP SHELTER | 2-B11 | 194 | 8 |
| | 2-B14 | 197 | 14 |
| | 2-B16 | 199 | 20 |
| | 2-C2 | 201 | 11 |
| | 2-C4 | 203 | 18 |
| | 2-C5 | 204 | 10 |
| MARK, L. UNDER COWL | 2-C3 | 202 | 11 |
| MARK, MIDDLE COWL | 2-B11 | 194 | 2 |
| | 2-B12 | 195 | 10 |
| | 2-C3 | 202 | 3 |
| MARK, MIDDLE COWL | 2-C5 | 204 | 2 |
| MARK, RECEIVER | I11 | 98 | 2 |
| MARK, RR. SEAT COWL | 2-B11 | 194 | 5 |
| | | | 6 |
| | 2-B14 | 197 | 11 |
| | | | 12 |
| | 2-B16 | 199 | 17 |
| | | | 18 |
| | 2-C2 | 201 | 8 |
| | | | 9 |
| | 2-C3 | 202 | 12 |
| | | | 13 |
| | | | 14 |
| | 2-C5 | 204 | 7 |
| | | | 8 |
| | 2-C7 | 206 | 9 |
| | | | 10 |
| | 2-C10 | 209 | 11 |
| | | | 12 |
| | 2-C13 | 212 | 15 |
| | | | 16 |
| MARK, R. MIDDLE COWL | 2-C3 | 202 | 4 |
| MARK, R. TOP SHELTER | 2-B11 | 194 | 7 |
| | 2-B14 | 197 | 13 |
| | 2-B16 | 199 | 19 |
| | 2-C2 | 201 | 10 |
| | 2-C4 | 203 | 17 |
| | 2-C5 | 204 | 9 |
| MARK, SHOWA | J2 | 105 | 31 |
| | L16 | 151 | 24 |
| MARK, TOP SHELTER | 2-C4 | 203 | 21 |
| | 2-C13 | 212 | 21 |
| MARK, UNDER COWL | 2-B11 | 194 | 3 |
| | 2-B12 | 195 | 9 |
| | 2-B14 | 197 | 10 |
| | 2-B15 | 198 | 8 |
| | 2-B16 | 199 | 14 |
| | 2-C1 | 200 | 6 |
| | 2-C2 | 201 | 6 |
| | | | 7 |
| | 2-C3 | 202 | 7 |
| | 2-C5 | 204 | 3 |
| | | | 6 |
| | 2-C7 | 206 | 7 |
| | | | 8 |
| | 2-C10 | 209 | 9 |
| | | | 10 |
| | 2-C12 | 211 | 11 |
| | | | 14 |
| MAT A, L. MIDDLE COWL | N16 | 183 | 8 |
| | 2-B4 | 187 | 5 |
| MAT A, L. UNDER COWL | 2-B7 | 190 | 7 |
| MAT A, R. ENGINE HANGER | N1 | 168 | 3 |
| MAT A, R. MIDDLE COWL | 2-B4 | 187 | 4 |
| MAT A, R. UNDER COWL | 2-B7 | 190 | 6 |
| MAT A, UNDER COWL | 2-B5 | 188 | 5 |
| MAT B, L. MIDDLE COWL | N16 | 183 | 10 |
| | 2-B4 | 187 | 7 |
| MAT B, L. UNDER COWL | 2-B5 | 188 | 7 |

# PART NAME INDEX


| Part name | Address | Page | Ref. |
|---|---|---|---|
| MAT B, R. ENGINE HANGER | N1 | 168 | 4 |
| MAT B, R. MIDDLE COWL | N16 | 183 | 9 |
| | 2-B4 | 187 | 6 |
| MAT B, R. UNDER COWL | 2-B5 | 188 | 6 |
| MAT C, L. UNDER COWL | 2-B5 | 188 | 9 |
| MAT C, R. MIDDLE COWL | N16 | 183 | 11 |
| MAT C, R. UNDER COWL | 2-B5 | 188 | 8 |
| MAT D, L. MIDDLE COWL | N16 | 183 | 12 |
| MAT D, R. UNDER COWL | 2-B6 | 189 | 12 |
| MAT E, L. MIDDLE COWL | N16 | 183 | 14 |
| MAT E, L. UNDER COWL | 2-B6 | 189 | 13 |
| MAT F, L. UNDER COWL | 2-B6 | 189 | 15 |
| MAT F, R. UNDER COWL | 2-B6 | 189 | 14 |
| MAT G, R. MIDDLE COWL | 2-B1 | 184 | 21 |
| MAT, FR. SPEAKER BOX | J14 | 117 | 19 |
| MAT, FR. TOP SHELTER | J14 | 117 | 8 |
| MAT, FUEL TANK | J16 | 119 | 15 |
| MAT, INNER MIDDLE COWL | 2-B5 | 188 | 2 |
| MAT, L. ENGINE HANGER | N1 | 168 | 5 |
| | N13 | 180 | 1 |
| | 2-B2 | 185 | 1 |
| | 2-B7 | 190 | 1 |
| MAT, L. MIDDLE COWL | 2-B4 | 187 | 18 |
| | | | 19 |
| MAT, L. RR. TOP SHELTER | J14 | 117 | 10 |
| MAT, RAM DUCT | N1 | 168 | 7 |
| MAT, R. PIVOT PLATE | N1 | 168 | 6 |
| MAT, R. RR. TOP SHELTER | J14 | 117 | 9 |
| MAT, R. UNDER COWL | 2-B5 | 188 | 4 |
| MAT, TOP SHELTER | J14 | 117 | 7 |
| METER ASSY., COMBINATION | I3 | 90 | 1 |
| METER ASSY., SPEED & TACHO & FUEL | I3 | 90 | 2 |
| MIRROR ASSY., L. BACK | N9 | 176 | 9 |
| | N10 | 177 | 9 |
| | N11 | 178 | 10 |
| MIRROR ASSY., R. BACK | N9 | 176 | 8 |
| | N11 | 178 | 9 |
| MOTOR ASSY., FAN | N4 | 171 | 5 |
| | N6 | 173 | 5 |
| MOTOR ASSY., SERVO | M11 | 162 | 11 |
| | M12 | 163 | 9 |
| MOTOR ASSY., STARTER | G2 | 68 | 1 |
| MUFFLER ASSY., EX. VALVE AND EX. | L2 | 137 | 7 |
| | L5 | 140 | 7 |
| [ N ] | | | |
| NECK, FILLER | N4 | 171 | 8 |
| | N6 | 173 | 8 |
| NUT-WASHER, 6MM | G2 | 68 | 2 |
| NUT A, SEALING, 12MM | H3 | 85 | 9 |
| | J16 | 119 | 27 |
| NUT, CAP, 6MM | I7 | 94 | 30 |
| | | | 39 |
| | I9 | 96 | 19 |
| NUT, CLIP, 5MM | I1 | 88 | 12 |
| | J14 | 117 | 16 |
| NUT, CLIP, 5MM | K15 | 134 | 21 |
| | L4 | 139 | 41 |
| NUT, COWL SETTING, 5MM | L6 | 141 | 34 |
| | N10 | 177 | 10 |
| | N11 | 178 | 11 |
| | N16 | 183 | 17 |
| | 2-B4 | 187 | 11 |
| | 2-B7 | 190 | 12 |
| NUT, FLANGE, 10MM | N2 | 169 | 38 |
| NUT, FLANGE, 12MM | N2 | 169 | 39 |
| NUT, FLANGE, 4MM | M14 | 165 | 27 |
| | M16 | 167 | 30 |
| NUT, FLANGE, 5MM | M2 | 153 | 30 |
| | M4 | 155 | 25 |
| | M8 | 159 | 8 |
| NUT, FLANGE, 6MM | J16 | 119 | 30 |
| | L4 | 139 | 43 |
| | L7 | 142 | 45 |
| | M2 | 153 | 31 |
| | M4 | 155 | 26 |
| | M5 | 156 | 13 |
| | M7 | 158 | 22 |
| | M12 | 163 | 16 |
| | N2 | 169 | 37 |
| NUT, FLANGE, 7MM | L3 | 138 | 40 |
| | L6 | 141 | 41 |
| NUT, GOVERNOR ARM FIXING | L8 | 143 | 12 |
| NUT, HEX., 6MM | L8 | 143 | 16 |
| | M11 | 162 | 18 |
| | M12 | 163 | 16 |
| | | | 17 |
| NUT, HEX., 8MM | J8 | 111 | 25 |
| | L14 | 149 | 22 |
| NUT, LOCK | J1 | 104 | 14 |
| NUT, LOCK, 20MM | N2 | 169 | 34 |
| NUT, LOCK, 25MM | F11 | 61 | 16 |
| NUT, LOCK, 36MM | L14 | 149 | 23 |
| NUT, SERRATE, 5MM | N5 | 172 | 31 |
| | N7 | 174 | 30 |
| NUT, SETTING | N4 | 171 | 2 |
| | N6 | 173 | 2 |
| NUT, SIDE STAND | L11 | 146 | 7 |
| NUT, SPRING, 6MM | 2-B6 | 189 | 25 |
| NUT, SQUARE, 5MM | F2 | 52 | 7 |
| NUT, STEERING STEM | I13 | 100 | 26 |
| | | | 30 |
| NUT, U, 10MM | J12 | 115 | 16 |
| | L15 | 150 | 17 |
| NUT, U, 22MM | J12 | 115 | 17 |
| | L13 | 148 | 21 |
| NUT, U, 6MM | I7 | 94 | 31 |
| | I14 | 101 | 11 |
| [ O ] | | | |
| OIL SEAL, 14X22X5 | G1 | 67 | 24 |
| OIL SEAL, 34.8X53X8 | G12 | 78 | 38 |
| OIL SEAL, 8X16X7 | G6 | 72 | 33 |
| OIL SEAL, 8X18X5 | G1 | 67 | 25 |
| ORIFICE A, | G5 | 71 | 6 |
| ORIFICE B, | G5 | 71 | 7 |
| ORIFICE, 1.4MM | G5 | 71 | 8 |
| ORIFICE, 1.6MM | G5 | 71 | 4 |
| O-RING | G2 | 68 | 11 |
| | | | 12 |
| | H2 | 84 | 18 |
| | H3 | 85 | 12 |
| | I10 | 97 | 23 |
| O-RING SET | F16 | 66 | 1 |
| O-RING, 10.8X2.4 | J2 | 105 | 27 |
| O-RING, 11.8X2.4 | G6 | 72 | 35 |
| | H5 | 87 | 2 |
| O-RING, 13.8X2.5 | G6 | 72 | 36 |
| | H5 | 87 | 2 |
| O-RING, 14.7X2.2 | G3 | 69 | 19 |
| | H5 | 87 | 2 |
| O-RING, 14.8X2.4 | I7 | 94 | 35 |
| | I10 | 97 | 22 |
| | J8 | 111 | 22 |
| O-RING, 15X2.5 | G9 | 75 | 19 |
| | H5 | 87 | 2 |
| O-RING, 16X2.1 | F2 | 52 | 19 |
| O-RING, 18X3 | F9 | 59 | 10 |
| | H5 | 87 | 2 |
| O-RING, 21.9X1.8 | G3 | 69 | 18 |
| | H5 | 87 | 2 |
| O-RING, 23.3X2.4 | J2 | 105 | 28 |
| O-RING, 24.4X3.1 | G2 | 68 | 3 |
| | H5 | 87 | 2 |
| O-RING, 24.5X2 | G16 | 82 | 23 |
| | H5 | 87 | 2 |
| O-RING, 32X1.7 | G6 | 72 | 34 |
| | H5 | 87 | 2 |
| O-RING, 32.95X2.62 | G1 | 67 | 26 |
| | H5 | 87 | 2 |
| O-RING, 42.2X2.4 | J2 | 105 | 30 |
| O-RING, 44.3X2.5 | F2 | 52 | 18 |
| | H4 | 86 | 2 |
| O-RING, 48.1X3.6 | F9 | 59 | 9 |
| | H5 | 87 | 2 |
| O-RING, 51X2 | J12 | 115 | 24 |
| O-RING, 7.5X1.5 | K8 | 127 | 22 |
| | K13 | 132 | 22 |
| O-RING, 7.8X1.9 | H3 | 85 | 13 |
| O-RING, 9.5X1.5 | J2 | 105 | 29 |
| O-RING, OIL COOLER | G3 | 69 | 20 |
| | H5 | 87 | 2 |
| OUTER COMP. A, CLUTCH | F10 | 60 | 2 |
| OUTER COMP. B, CLUTCH | F10 | 60 | 2 |
| OUTER, STARTING CLUTCH | F13 | 63 | 4 |
| [ P ] | | | |
| PACKING, BASE | J16 | 119 | 19 |
| PACKING, LENS | M2 | 153 | 37 |
| | M4 | 155 | 29 |
| | M5 | 156 | 7 |
| | M6 | 157 | 11 |

# PART NAME INDEX


| Part name | Address | Page | Ref. |
|---|---|---|---|
| PACKING, MUFFLER | L3 | 138 | 23 |
| | | | 24 |
| | L6 | 141 | 23 |
| | | | 24 |
| PACKING, OIL STRAINER | G3 | 69 | 7 |
| | H5 | 87 | 1 |
| PAD SET, FR. | J3 | 106 | 3 |
| PAD SET, RR. | J9 | 112 | 2 |
| | J10 | 113 | 1 |
| PAD, L. FRAME BODY | J13 | 116 | 2 |
| PAD, R. FRAME BODY | J13 | 116 | 1 |
| PAN COMP., OIL | G3 | 69 | 1 |
| PEDAL COMP., GEAR CHANGE | L8 | 143 | 3 |
| PEDAL COMP., RR. BRAKE | L8 | 143 | 6 |
| PGM-FI UNIT | M14 | 165 | 16 |
| | M16 | 167 | 17 |
| PICK UP ASSY. | F2 | 52 | 8 |
| PIECE, CLUTCH JOINT | F11 | 61 | 12 |
| PIN C, DOWEL, 4X6.5 | G9 | 75 | 20 |
| PIN C, PILLION STEP | L10 | 145 | 25 |
| PIN, 10X36.5 | F13 | 63 | 2 |
| PIN, HANGER | J4 | 107 | 11 |
| | J9 | 112 | 10 |
| | J10 | 113 | 9 |
| PIN, PISTON | G8 | 74 | 3 |
| PIN, SHIFT RETURN SPRING | G13 | 79 | 13 |
| PIN, SPLIT, 1.6X12 | L10 | 145 | 23 |
| PIN, SPLIT, 1.6X15 | J8 | 111 | 26 |
| PIN, SPLIT, 2.0X15 | L10 | 145 | 24 |
| PIN, STEP BAR | L9 | 144 | 5 |
| PIPE COMP., CLUTCH | I9 | 96 | 9 |
| PIPE COMP., EX. | L2 | 137 | 1 |
| | L5 | 140 | 1 |
| PIPE COMP., FUEL | H1 | 83 | 15 |
| PIPE COMP., FUEL FEED | H3 | 85 | 6 |
| PIPE COMP., L. STEERING HANDLE | I12 | 99 | 19 |
| PIPE COMP., R. SLIDE | J1 | 104 | 10 |
| PIPE COMP., R. STEERING HANDLE | I12 | 99 | 12 |
| PIPE, CP | I1 | 88 | 3 |
| | | | 5 |
| | I2 | 89 | 18 |
| PIPE, L. SLIDE | J2 | 105 | 21 |
| PIPE, R. SLIDE | J1 | 104 | 10 |
| PIPE, WATER | N5 | 172 | 28 |
| | N7 | 174 | 27 |
| PISTON | G8 | 74 | 2 |
| | J3 | 106 | 6 |
| | | | 9 |
| | J9 | 112 | 3 |
| | J10 | 113 | 3 |
| PISTON SET, MASTER CYLINDER | I9 | 96 | 3 |
| | J7 | 110 | 9 |
| PISTON, SLAVE CYLINDER | F16 | 66 | 15 |
| PIVOT, CAM CHAIN TENSIONER | F8 | 58 | 10 |
| PIVOT, SHIFT DRUM STOPPER ARM | G13 | 79 | 15 |
| PLATE A, BEARING SETTING | G6 | 72 | 31 |
| PLATE B, ADJUSTING | J1 | 104 | 15 |
| PLATE B, BEARING SETTING | G6 | 72 | 32 |
| PLATE B, CLUTCH | F12 | 62 | 22 |
| PLATE, BEARING SETTING | G10 | 76 | 2 |
| PLATE, CENTER CROSS | N2 | 169 | 13 |
| PLATE, CLUTCH | F10 | 60 | 8 |
| | F11 | 61 | 22 |
| PLATE, CLUTCH PRESSURE | F11 | 61 | 11 |
| PLATE, DIAPHRAGM | I6 | 93 | 19 |
| | I8 | 95 | 46 |
| | I9 | 96 | 8 |
| | J7 | 110 | 13 |
| PLATE, DRIVE CHAIN GUIDE | F16 | 66 | 5 |
| PLATE, FR. CROSS | N2 | 169 | 14 |
| PLATE, GEARSHIFT DRUM STOPPER | G13 | 79 | 8 |
| PLATE, HANDLE WEIGHT | I12 | 99 | 17 |
| PLATE, JOINT | L3 | 138 | 21 |
| | L5 | 140 | 21 |
| PLATE, NUMBER PLATE BACK | M2 | 153 | 21 |
| | M3 | 154 | 15 |
| PLATE, PGM-FI UNIT SETTING | K13 | 132 | 1 |
| PLATE, PILLION STEP CLICK | L9 | 144 | 11 |
| PLATE, PORT | F1 | 51 | 4 |
| PLATE, REGISTERED NUMBER | 2-B8 | 191 | 2 |
| PLATE, SPRING ADJUSTER | J2 | 105 | 23 |
| PLATE, STOP | I8 | 95 | 47 |
| | I9 | 96 | 14 |
| PLATE, WATER PUMP | F16 | 66 | 12 |
| PLATE, WINKER SETTING | M5 | 156 | 2 |
| | | | 3 |
| PLIERS, 135 | N3 | 170 | 5 |
| PLUG, CONE TYPE | M2 | 153 | 26 |
| | M3 | 154 | 21 |
| PLUG, HANDLE LEVER | I12 | 99 | 20 |
| PLUG, OIL COOLER | G5 | 71 | 3 |
| PLUG, SEALING | G5 | 71 | 2 |
| PLUG, SPARK | F2 | 52 | 9 |
| PROTECTOR, EX. PIPE INNER | L2 | 137 | 11 |
| | L5 | 140 | 10 |
| PROTECTOR, EX. PIPE OUTER | L2 | 137 | 14 |
| | L5 | 140 | 14 |
| PROTECTOR, HEAT | K4 | 123 | 11 |
| | K6 | 125 | 12 |
| PROTECTOR, MUFFLER | L2 | 137 | 17 |
| | L5 | 140 | 16 |
| PROTECTOR, WIND | I15 | 102 | 6 |
| PULSER ASSY., CAM | F3 | 53 | 25 |
| PUMP ASSY., FUEL | J15 | 118 | 1 |
| PUMP ASSY., OIL | G3 | 69 | 3 |
| PUMP COMP., WATER | F16 | 66 | 9 |
| PUMP UNIT, FUEL | J15 | 118 | 1 |
| PURSE, LOCK | M16 | 167 | 37 |
| [ R ] | | | |
| RADIATOR COMP. | N4 | 171 | 1 |
| | N6 | 173 | 1 |
| RAIL ASSY., SEAT | N2 | 169 | 12 |
| RECEIVER UNIT | I11 | 98 | 1 |
| RECEIVER UNIT SET | I11 | 98 | 1 |
| RECTIFIER ASSY., REGULATE | M13 | 164 | 2 |
| | M15 | 166 | 2 |
| REFLECTOR, REFLEX | M1 | 152 | 8 |
| | M3 | 154 | 7 |
| RELAY ASSY., POWER | M14 | 165 | 15 |
| | M16 | 167 | 16 |
| RELAY COMP., WINKER | M14 | 165 | 13 |
| | M16 | 167 | 14 |
| RETAINER | J10 | 113 | 5 |
| RETAINER, RR. BRACKET | J9 | 112 | 6 |
| RETAINER, VALVE SPRING | F4 | 54 | 9 |
| | F7 | 57 | 18 |
| RING | G2 | 68 | 9 |
| RING B, STOPPER | J1 | 104 | 9 |
| RING SET, PISTON | G8 | 74 | 1 |
| RING, BACK UP | J1 | 104 | 6 |
| RING, HANDLE WEIGHT SNAP | I12 | 99 | 16 |
| RING, OIL SEAL STOPPER | J1 | 104 | 12 |
| RING, STOPPER | J1 | 104 | 16 |
| | J2 | 105 | 17 |
| | J9 | 112 | 13 |
| | J10 | 113 | 12 |
| | L15 | 150 | 10 |
| RIVET, PUSH | N11 | 178 | 13 |
| ROD ASSY., CONNECTING | G8 | 74 | 5 |
| ROD COMP., CLUTCH LIFTER | F11 | 61 | 14 |
| ROD COMP., PUSH | J7 | 110 | 10 |
| ROD SUB ASSY., CUSHION CONNECTING | L15 | 150 | 9 |
| ROD, CLUTCH LIFTER | F11 | 61 | 14 |
| ROD, PUSH | I6 | 93 | 21 |
| | I9 | 96 | 1 |
| ROD, TIE | J7 | 110 | 15 |
| ROLLER, 3X8 | G14 | 80 | 22 |
| ROTOR, CAM PULSE | F4 | 54 | 4 |
| ROTOR, PULSE | F4 | 54 | 4 |
| RUBBER A, MOUNTING | M1 | 152 | 3 |
| RUBBER B, HANDLE WEIGHT | I12 | 99 | 18 |
| RUBBER, CONTROL BOX | I2 | 89 | 13 |
| RUBBER, DAMPER | G9 | 75 | 13 |
| RUBBER, FRAME PAD CUSHION | J13 | 116 | 3 |
| RUBBER, GEAR CHANGE PEDAL | L8 | 143 | 1 |
| RUBBER, HANDLE WEIGHT | I12 | 99 | 15 |
| RUBBER, LICENSE LIGHT | M3 | 154 | 14 |
| RUBBER, LINK STOPPER | N2 | 169 | 15 |
| RUBBER, L. COVER | F16 | 66 | 4 |
| RUBBER, L. FENDER SETTING | M2 | 153 | 36 |
| RUBBER, L. FR. TANK MOUNTING | J16 | 119 | 5 |
| RUBBER, MOUNTING | F1 | 51 | 9 |
| | L10 | 145 | 27 |
| RUBBER, MUFFLER MOUNTING | L2 | 137 | 13 |
| | L3 | 138 | 25 |
| | L5 | 140 | 13 |
| | L6 | 141 | 25 |
| RUBBER, OIL CUP | I6 | 93 | 5 |
| RUBBER, PROTECTOR | J16 | 119 | 23 |
| | K4 | 123 | 1 |
| | K5 | 124 | 17 |
| | K6 | 125 | 1 |
| | K7 | 126 | 19 |
| | L4 | 139 | 42 |

# PART NAME INDEX


| Part name | Address | Page | Ref. |
|---|---|---|---|
| RUBBER, PROTECTOR | L7 | 142 | 44 |
| | L9 | 144 | 19 |
| | L10 | 145 | 29 |
| | N9 | 176 | 1 |
| | N13 | 180 | 2 |
| RUBBER, PROTECTOR MOUNTING | L2 | 137 | 16 |
| | L5 | 140 | 15 |
| RUBBER, PROTECTOR PACKING | L2 | 137 | 9 |
| | | | 10 |
| | L5 | 140 | 9 |
| RUBBER, RADIATOR MOUNTING | N4 | 171 | 10 |
| | N6 | 173 | 10 |
| | | | 11 |
| RUBBER, RR. FENDER CUSHION | I16 | 103 | 2 |
| | J13 | 116 | 4 |
| | M16 | 167 | 18 |
| RUBBER, RR. FENDER SETTING | K4 | 123 | 9 |
| | K6 | 125 | 10 |
| RUBBER, RR. TANK MOUNTING | J16 | 119 | 6 |
| RUBBER, R. FENDER SETTING | M2 | 153 | 35 |
| RUBBER, R. FR. TANK MOUNTING | J16 | 119 | 10 |
| RUBBER, SEAL | K10 | 129 | 8 |
| | K15 | 134 | 10 |
| RUBBER, SEAT CUSHION | K3 | 122 | 3 |
| RUBBER, SHOCK | M9 | 160 | 9 |
| | M10 | 161 | 8 |
| RUBBER, SPEEDOMETER MOUNTING | I3 | 90 | 5 |
| RUBBER, STEP HOLDER | L10 | 145 | 29 |
| RUBBER, SUPPORT STAY SPACER | M1 | 152 | 9 |
| RUBBER, SWITCH | I3 | 90 | 3 |
| RUBBER, TAILLIGHT | M1 | 152 | 3 |
| | M2 | 153 | 35 |
| | | | 36 |
| RUBBER, THERMOSTAT | G15 | 81 | 3 |
| RUBBER, WINKER MOUNTING | M6 | 157 | 14 |
| | | | 15 |
| [ S ] | | | |
| SCREW-WASHER, 3X8 | H2 | 84 | 19 |
| SCREW-WASHER, 4X12 | I7 | 94 | 38 |
| | I10 | 97 | 24 |
| | J8 | 111 | 24 |
| SCREW-WASHER, 5X12 | H2 | 84 | 20 |
| | M12 | 163 | 20 |
| SCREW-WASHER, 5X22 | I2 | 89 | 15 |
| | I13 | 100 | 22 |
| SCREW-WASHER, 6X20 | H2 | 84 | 21 |
| SCREW SET, STOP | H1 | 83 | 3 |
| SCREW, BLEEDER | F16 | 66 | 17 |
| | I6 | 93 | 2 |
| | J3 | 106 | 7 |
| | J9 | 112 | 11 |
| | J10 | 113 | 10 |
| SCREW, FLAT, 4X40 | J8 | 111 | 23 |
| SCREW, FLAT, 4X50 | I7 | 94 | 37 |
| SCREW, OVAL, 6X60 | I13 | 100 | 25 |
| SCREW, PAN, 4X32 | I5 | 92 | 12 |
| SCREW, PAN, 4X45 | I5 | 92 | 13 |
| SCREW, PAN, 5MM | K8 | 127 | 23 |
| | K13 | 132 | 23 |
| SCREW, PAN, 5X13 | I14 | 101 | 9 |
| SCREW, PAN, 5X15 | L3 | 138 | 35 |
| | L6 | 141 | 36 |
| | N16 | 183 | 18 |
| | 2-B4 | 187 | 12 |
| SCREW, PAN, 5X16 | K15 | 134 | 23 |
| SCREW, PAN, 5X20 | I5 | 92 | 15 |
| | | | 16 |
| | M2 | 153 | 22 |
| | M3 | 154 | 17 |
| | N10 | 177 | 13 |
| SCREW, PAN, 5X21 | M2 | 153 | 23 |
| | M3 | 154 | 18 |
| SCREW, PAN, 5X22 | I5 | 92 | 14 |
| SCREW, PAN, 5X30 | I5 | 92 | 15 |
| SCREW, PAN, 5X35 | I5 | 92 | 15 |
| SCREW, PAN, 5X40 | I5 | 92 | 16 |
| SCREW, PAN, 5X45 | I5 | 92 | 16 |
| SCREW, PAN, 6X11 | K5 | 124 | 15 |
| | K7 | 126 | 17 |
| SCREW, PAN, 6X12 | M16 | 167 | 22 |
| SCREW, PAN, 6X14 | K3 | 122 | 10 |
| | K5 | 124 | 16 |
| | K7 | 126 | 18 |
| | L3 | 138 | 36 |
| | | | 37 |
| | L6 | 141 | 37 |
| | L9 | 144 | 17 |
| SCREW, PAN, 6X20 | I16 | 103 | 4 |
| | L6 | 141 | 38 |
| | M16 | 167 | 23 |
| SCREW, RIVET, 1.8X5 | N2 | 169 | 35 |
| SCREW, SPECIAL, 5X11 | L3 | 138 | 34 |
| | L6 | 141 | 35 |
| SCREW, SPECIAL, 5X12 | J14 | 117 | 15 |
| | K15 | 134 | 18 |
| SCREW, SPECIAL, 5X16 | L6 | 141 | 31 |
| SCREW, SPECIAL, 6MM | K5 | 124 | 14 |
| | K6 | 125 | 16 |
| SCREW, SPECIAL, 6X14 | N16 | 183 | 19 |
| | 2-B4 | 187 | 13 |
| | 2-B6 | 189 | 24 |
| | 2-B7 | 190 | 13 |
| SCREW, SPECIAL, 6X19 | 2-B6 | 189 | 23 |
| SCREW, TAPPING, 3X16 | I3 | 90 | 7 |
| | I13 | 100 | 27 |
| SCREW, TAPPING, 3X8 | M6 | 157 | 19 |
| SCREW, TAPPING, 4X10 | K5 | 124 | 20 |
| | K7 | 126 | 23 |
| | M4 | 155 | 24 |
| | N10 | 177 | 16 |
| SCREW, TAPPING, 4X12 | I3 | 90 | 7 |
| | K3 | 122 | 12 |
| | K8 | 127 | 25 |
| | K14 | 133 | 26 |
| | M4 | 155 | 24 |
| SCREW, TAPPING, 4X14 | M5 | 156 | 12 |
| SCREW, TAPPING, 4X14 | M6 | 157 | 20 |
| | | | 21 |
| SCREW, TAPPING, 4X16 | I2 | 89 | 16 |
| | K10 | 129 | 19 |
| | M2 | 153 | 28 |
| | M4 | 155 | 23 |
| SCREW, TAPPING, 4X18 | K13 | 132 | 19 |
| SCREW, TAPPING, 4X8 | J14 | 117 | 18 |
| SCREW, TAPPING, 5X12 | M2 | 153 | 29 |
| SCREW, TAPPING, 5X14 | I4 | 91 | 8 |
| SCREW, TAPPING, 5X16 | K10 | 129 | 20 |
| | K11 | 130 | 21 |
| | K15 | 134 | 19 |
| | K16 | 135 | 24 |
| SCREW, TAPPING, 5X20 | K8 | 127 | 24 |
| | K9 | 128 | 26 |
| | | | 27 |
| | K14 | 133 | 24 |
| | | | 25 |
| SCREW, TRIPLE, 4X11 | I9 | 96 | 16 |
| SCREW, TRUSS, 5X18 | N10 | 177 | 11 |
| | N11 | 178 | 12 |
| SCREW, VISOR SETTING | M8 | 159 | 7 |
| SEAL A, AIR CLEANER CASE | K8 | 127 | 4 |
| | K13 | 132 | 5 |
| SEAL B, AIR CLEANER CASE | K8 | 127 | 5 |
| | K10 | 129 | 2 |
| | K13 | 132 | 6 |
| | K15 | 134 | 2 |
| SEAL C, AIR CLEANER CASE | K8 | 127 | 7 |
| | K13 | 132 | 8 |
| SEAL E, AIR CLEANER CASE | K8 | 127 | 11 |
| | K13 | 132 | 12 |
| SEAL F, AIR CLEANER CASE | K8 | 127 | 12 |
| | K13 | 132 | 13 |
| SEAL G, AIR CLEANER | K10 | 129 | 6 |
| | K15 | 134 | 8 |
| SEAL RING, INJECTOR | H1 | 83 | 12 |
| | H3 | 85 | 2 |
| SEAL SET, FR. FORK | J2 | 105 | 18 |
| SEAL SET, PISTON | J3 | 106 | 1 |
| | | | 2 |
| | J9 | 112 | 1 |
| | J10 | 113 | 2 |
| SEAL, FR. DUCT | K10 | 129 | 10 |
| | K15 | 134 | 12 |
| SEAL, FUEL TANK | J16 | 119 | 9 |
| SEAL, IGNITION SWITCH | I11 | 98 | 3 |
| | | | 4 |
| SEAL, JOINT | J3 | 106 | 4 |
| SEAL, RR. SEAT COWL | K4 | 123 | 3 |
| | K6 | 125 | 3 |
| SEAL, VALVE STEM | F4 | 54 | 1 |
| SEAT ASSY., PILLION | K3 | 122 | 8 |
| SEAT ASSY., SINGLE | K3 | 122 | 2 |
| SEAT, JUDDER SPRING | F10 | 60 | 10 |
| SEAT, VALVE SPRING | F4 | 54 | 10 |
| | F7 | 57 | 19 |
| SENSOR ASSY., AIR TEMP | K8 | 127 | 18 |

| Part name | Address | Page | Ref. |
|---|---|---|---|
| SENSOR ASSY., AIR TEMP | K13 | 132 | 18 |
| SENSOR ASSY., MAP | H2 | 84 | 17 |
| SENSOR ASSY., SPEED | G5 | 71 | 15 |
| SENSOR ASSY., WATER TEMP | G16 | 82 | 18 |
| SENSOR COMP., BANK ANGLE | M13 | 164 | 10 |
| | M15 | 166 | 11 |
| SENSOR, OXYGEN | L3 | 138 | 27 |
| | L6 | 141 | 26 |
| SEPARATOR, AIR CLEANER | K8 | 127 | 8 |
| | K13 | 132 | 9 |
| SHAFT A, GEARSHIFT FORK | G13 | 79 | 6 |
| SHAFT B, GEARSHIFT FORK | G13 | 79 | 7 |
| SHAFT SET, STARTER | H1 | 83 | 1 |
| SHAFT, BALANCER | G9 | 75 | 12 |
| SHAFT, BUTTERFLY VALVE | L2 | 137 | 3 |
| | L5 | 140 | 3 |
| SHELTER SET, TOP | J13 | 116 | 5 |
| | J14 | 117 | 5 |
| | | | 6 |
| SHIM J, FINAL REDUCTION THIRD GEAR | G11 | 77 | 29 |
| SHIM, TAPPET | F4 | 54 | 12 |
| | F5 | 55 | 12 |
| | F6 | 56 | 12 |
| SHROUD COMP. | N4 | 171 | 3 |
| | N6 | 173 | 3 |
| SLEEVE | J9 | 112 | 14 |
| SLIDER, CHAIN | L13 | 148 | 13 |
| SOCKET COMP. | I1 | 88 | 7 |
| SOCKET COMP., HEADLIGHT | I1 | 88 | 6 |
| SOCKET COMP., LICENSE | M1 | 152 | 6 |
| | M3 | 154 | 4 |
| SOCKET SET, L. WINKER | M6 | 157 | 8 |
| | | | 17 |
| SOCKET SET, R. WINKER | M6 | 157 | 4 |
| | | | 10 |
| SPACER, FR. FORK | J4 | 107 | 13 |
| | | | 16 |
| SPACER, REGULATOR RECTIFIER | M13 | 164 | 3 |
| | M15 | 166 | 3 |
| SPANNER, 10X12 | N3 | 170 | 10 |
| SPANNER, 8X12 | N3 | 170 | 9 |
| SPANNER, PIN | N3 | 170 | 4 |
| SPINDLE COMP., GEARSHIFT | G13 | 79 | 11 |
| SPOILER, L. FR. | N11 | 178 | 6 |
| SPOILER, R. FR. | N11 | 178 | 5 |
| SPRING ASSY., BRAKE PEDAL | L8 | 143 | 7 |
| SPRING ASSY., SIDE STAND | L11 | 146 | 4 |
| SPRING, CARBON BRUSH | G2 | 68 | 6 |
| SPRING, CLUTCH | F11 | 61 | 13 |
| SPRING, CLUTCH PLATE | F10 | 60 | 9 |
| SPRING, EX. VALVE | F7 | 57 | 17 |
| SPRING, FR. FORK | J1 | 104 | 2 |
| SPRING, GEARSHIFT DRUM STOPPER | G13 | 79 | 10 |
| SPRING, IN. VALVE INNER | F6 | 56 | 16 |
| SPRING, IN. VALVE OUTER | F6 | 56 | 15 |
| SPRING, KICK STARTER STOPPER | L9 | 144 | 1 |
| SPRING, LOCK KEY SETTING | K3 | 122 | 1 |
| SPRING, L. STEP RETURN | L9 | 144 | 6 |
| SPRING, PAD | J3 | 106 | 5 |
| | J9 | 112 | 4 |
| | J10 | 113 | 4 |
| SPRING, RETURN | M11 | 162 | 5 |
| | M12 | 163 | 5 |
| SPRING, R. STEP RETURN | L9 | 144 | 4 |
| SPRING, SEAT LOCK | K3 | 122 | 9 |
| SPRING, SHIFT RETURN | G13 | 79 | 12 |
| SPRING, SLAVE CYLINDER | F16 | 66 | 16 |
| SPRING, STOP SWITCH | L8 | 143 | 5 |
| SPRING, VALVE | F4 | 54 | 8 |
| SPROCKET, CAM | F8 | 58 | 1 |
| SPROCKET, DRIVE | G11 | 77 | 18 |
| SPROCKET, FINAL DRIVEN | J11 | 114 | 2 |
| SPROCKET, OIL PUMP DRIVE | F10 | 60 | 1 |
| SPROCKET, OIL PUMP DRIVEN | G3 | 69 | 4 |
| SPROCKET, TIMING | G9 | 75 | 15 |
| STATOR COMP. | F15 | 65 | 3 |
| STAY A, SERVO MOTOR | M11 | 162 | 12 |
| STAY A, UPPER COWL | N9 | 176 | 7 |
| | N11 | 178 | 8 |
| STAY B, SERVO MOTOR | M11 | 162 | 14 |
| STAY, AIR INJECTION CONTROL VALVE | K12 | 131 | 2 |
| | L1 | 136 | 1 |
| STAY, FR. LOCK CABLE | K4 | 123 | 10 |
| STAY, FR. MASTER CYLINDER | I7 | 94 | 23 |
| STAY, FUSE BOX | M16 | 167 | 19 |
| STAY, HARNESS GUIDE | G2 | 68 | 10 |
| STAY, LOCK CABLE | K6 | 125 | 11 |
| STAY, L. FENDER A | M1 | 152 | 18 |
| | M3 | 154 | 12 |
| STAY, L. FR. UNDER COWL | 2-B6 | 189 | 19 |
| | 2-B7 | 190 | 9 |
| STAY, L. MIDDLE COWL | N16 | 183 | 16 |
| | 2-B4 | 187 | 9 |
| STAY, L. TAILLIGHT SIDE | M8 | 159 | 6 |
| STAY, L. UPPER RADIATOR | K10 | 129 | 11 |
| | K15 | 134 | 14 |
| STAY, MIDDLE COWL UPPER | 2-B4 | 187 | 10 |
| | 2-B6 | 189 | 20 |
| STAY, PGM-FI UNIT | K10 | 129 | 15 |
| STAY, RADIATOR LOWER | N4 | 171 | 15 |
| | N6 | 173 | 17 |
| STAY, REGULATE RECTIFIER | M13 | 164 | 4 |
| STAY, R. COUPLER | M13 | 164 | 5 |
| STAY, R. FENDER A | M1 | 152 | 17 |
| | M3 | 154 | 11 |
| STAY, R. FR. UNDER COWL | 2-B6 | 189 | 18 |
| | 2-B7 | 190 | 8 |
| STAY, R. MIDDLE COWL | N16 | 183 | 15 |
| | 2-B4 | 187 | 8 |
| STAY, R. TAILLIGHT SIDE | M8 | 159 | 5 |
| STAY, R. UPPER RADIATOR | K15 | 134 | 13 |
| STAY, STEERING DAMPER | I14 | 101 | 3 |
| STAY, STOP SWITCH | L8 | 143 | 8 |
| STAY, WINKER | M7 | 158 | 23 |
| | | | 24 |
| STAY, WIRE | H1 | 83 | 8 |
| STEM SUB ASSY., STEERING | I15 | 102 | 4 |
| STOPPER COMP., GEARSHIFT DRUM | G13 | 79 | 9 |
| STOPPER, EX. VALVE | M11 | 162 | 4 |
| | M12 | 163 | 4 |
| STOPPER, SPRING SEAT | J1 | 104 | 4 |
| STRAINER COMP., OIL | G3 | 69 | 6 |
| STRIPE A, L. MIDDLE COWL | 2-B13 | 196 | 4 |
| | | | 5 |
| | 2-B15 | 198 | 3 |
| | 2-C1 | 200 | 3 |
| | 2-C6 | 205 | 4 |
| | 2-C9 | 208 | 6 |
| | 2-C10 | 209 | 6 |
| | 2-C12 | 211 | 6 |
| STRIPE A, L. TOP SHELTER | 2-B16 | 199 | 22 |
| | 2-C8 | 207 | 12 |
| | 2-C10 | 209 | 14 |
| | 2-C11 | 210 | 14 |
| | 2-C13 | 212 | 18 |
| STRIPE A, L. UNDER COWL | 2-C3 | 202 | 9 |
| STRIPE A, R. MIDDLE COWL | 2-B13 | 196 | 2 |
| | | | 3 |
| | 2-B15 | 198 | 2 |
| | 2-C1 | 200 | 2 |
| | 2-C6 | 205 | 3 |
| | 2-C9 | 208 | 5 |
| | 2-C12 | 211 | 5 |
| STRIPE A, R. TOP SHELTER | 2-B16 | 199 | 21 |
| | 2-C7 | 206 | 11 |
| | 2-C8 | 207 | 11 |
| | 2-C10 | 209 | 13 |
| | 2-C13 | 212 | 17 |
| STRIPE A, R. UNDER COWL | 2-C3 | 202 | 5 |
| STRIPE B, L. MIDDLE COWL | 2-B13 | 196 | 7 |
| | 2-B15 | 198 | 5 |
| | 2-C6 | 205 | 6 |
| | 2-C7 | 206 | 6 |
| | 2-C10 | 209 | 8 |
| | 2-C12 | 211 | 8 |
| STRIPE B, L. TOP SHELTER | 2-B16 | 199 | 24 |
| | 2-C8 | 207 | 14 |
| | 2-C11 | 210 | 16 |
| | 2-C13 | 212 | 20 |
| STRIPE B, L. UNDER COWL | 2-C3 | 202 | 10 |
| STRIPE B, R. MIDDLE COWL | 2-B13 | 196 | 6 |
| | 2-B15 | 198 | 4 |
| | 2-C6 | 205 | 5 |
| | 2-C10 | 209 | 7 |
| | 2-C12 | 211 | 7 |
| STRIPE B, R. TOP SHELTER | 2-B16 | 199 | 23 |
| | 2-C8 | 207 | 13 |
| | 2-C11 | 210 | 15 |
| | 2-C13 | 212 | 19 |
| STRIPE B, R. UNDER COWL | 2-C3 | 202 | 6 |
| STRIPE C, L. MIDDLE COWL | 2-B13 | 196 | 9 |
| | 2-B15 | 198 | 7 |
| | 2-C1 | 200 | 5 |
| | 2-C12 | 211 | 10 |
| STRIPE C, R. MIDDLE COWL | 2-B13 | 196 | 8 |

# PART NAME INDEX


| Partname | Address | Page | Ref. |
|---|---|---|---|
| STRIPE C, R. MIDDLE COWL | 2-B15 | 198 | 6 |
| | 2-C1 | 200 | 4 |
| | 2-C12 | 211 | 9 |
| STRIPE D, L. MIDDLE COWL | 2-B16 | 199 | 11 |
| | 2-C12 | 211 | 13 |
| STRIPE D, R. MIDDLE COWL | 2-B16 | 199 | 10 |
| | 2-C12 | 211 | 12 |
| STRIPE E, L. MIDDLE COWL | 2-B16 | 199 | 13 |
| STRIPE E, R. MIDDLE COWL | 2-B16 | 199 | 12 |
| STRIPE, L. RR. SEAT COWL | 2-C4 | 203 | 16 |
| | 2-C12 | 211 | 3 |
| STRIPE, L. TOP SHELTER | 2-B14 | 197 | 16 |
| | 2-C2 | 201 | 13 |
| | 2-C4 | 203 | 20 |
| STRIPE, L. UNDER COWL | 2-B16 | 199 | 16 |
| STRIPE, L. UPPER COWL | 2-C9 | 208 | 3 |
| STRIPE, R. RR. SEAT COWL | 2-C3 | 202 | 15 |
| | 2-C12 | 211 | 2 |
| STRIPE, R. TOP SHELTER | 2-B14 | 197 | 15 |
| | 2-C2 | 201 | 12 |
| | 2-C4 | 203 | 19 |
| STRIPE, R. UNDER COWL | 2-B16 | 199 | 15 |
| STRIPE, R. UPPER COWL | 2-C9 | 208 | 2 |
| STRIPE, UPPER COWL | 2-C6 | 205 | 1 |
| | 2-C9 | 208 | 1 |
| | 2-C12 | 211 | 1 |
| STRIPE, WINDSCREEN | 2-B11 | 194 | 1 |
| | 2-B13 | 196 | 1 |
| | 2-B15 | 198 | 1 |
| | 2-C1 | 200 | 1 |
| | 2-C3 | 202 | 2 |
| | 2-C5 | 204 | 1 |
| | 2-C6 | 205 | 2 |
| | 2-C9 | 208 | 4 |
| | 2-C12 | 211 | 4 |
| SUB HARNESS, ENGINE | G5 | 71 | 11 |
| SUB HARNESS, FR. | M13 | 164 | 9 |
| | M15 | 166 | 8 |
| SUB HARNESS, IGNITION | M13 | 164 | 8 |
| | M15 | 166 | 7 |
| SUSPENSION, SOLENOID VALVE | L1 | 136 | 7 |
| SUSPENSION, WINKER RELAY | M14 | 165 | 14 |
| | M16 | 167 | 15 |
| SWINGARM SUB ASSY. | L13 | 148 | 14 |
| SWITCH ASSY., CLUTCH | I9 | 96 | 11 |
| SWITCH ASSY., COMBINATION & LOCK | I12 | 99 | 6 |
| SWITCH ASSY., FR. STOP | I6 | 93 | 1 |
| SWITCH ASSY., NEUTRAL | G5 | 71 | 13 |
| SWITCH ASSY., OIL PRESSURE | G5 | 71 | 14 |
| SWITCH ASSY., RR. STOP | L8 | 143 | 4 |
| SWITCH ASSY., STARTER KILL | I5 | 92 | 3 |
| SWITCH ASSY., STARTER MAGNETIC | M9 | 160 | 8 |
| | M10 | 161 | 7 |
| SWITCH ASSY., WINKER | I5 | 92 | 4 |
| SWITCH SET, SIDE STAND | L11 | 146 | 1 |

[ T ]

| Partname | Address | Page | Ref. |
|---|---|---|---|
| TAILLIGHT UNIT | M8 | 159 | 2 |
| TANK COMP., VACUUM | K10 | 129 | 14 |
| | K15 | 134 | 17 |
| TANK SET, FUEL | J15 | 118 | 3 |
| TANK, BREATHER | K8 | 127 | 13 |
| TANK, RADIATOR RESERVE | N4 | 171 | 12 |
| | N6 | 173 | 13 |
| TAPE B, TANK GUARD | K1 | 120 | 40 |
| TAPE, PROTECTOR | K1 | 120 | 37 |
| TAPE, TANK GUARD | K1 | 120 | 35 |
| | L14 | 149 | 32 |
| TENSIONER COMP., CAM CHAIN | F8 | 58 | 3 |
| TERMINAL SET, BRUSH | G2 | 68 | 5 |
| THERMOSTAT ASSY. | G15 | 81 | 2 |
| THREAD B, STEERING HEAD TOP | I15 | 102 | 9 |
| THREAD COMP., STEERING HEAD TOP | I15 | 102 | 5 |
| THROTTLE BODY ASSY. | H1 | 83 | 10 |
| TIRE, FR. | J5 | 108 | 8 |
| | J6 | 109 | 8 |
| TIRE, RR. | J11 | 114 | 11 |
| | J12 | 115 | 11 |
| TOP COVER, STEERING DAMPER | I14 | 101 | 7 |
| TUBE | K15 | 134 | 5 |
| | | | 6 |
| TUBE A, FUEL TANK BREATHER | J16 | 119 | 11 |
| | K1 | 120 | 44 |
| TUBE B, FUEL TANK BREATHER | J16 | 119 | 18 |
| | K2 | 121 | 45 |
| TUBE C, FUEL TANK BREATHER | K1 | 120 | 39 |
| | K2 | 121 | 46 |
| TUBE, 12X30 | K9 | 128 | 28 |
| TUBE, 3.5X100 | K11 | 130 | 23 |
| TUBE, 3.5X130 | H2 | 84 | 24 |
| TUBE, 3.5X150 | H2 | 84 | 25 |
| TUBE, 3.5X490 | H2 | 84 | 26 |
| TUBE, 3.5X50 | H2 | 84 | 22 |
| TUBE, 3.5X540 | H2 | 84 | 26 |
| TUBE, 3.5X60 | H2 | 84 | 23 |
| TUBE, 4.5X230 | K11 | 130 | 24 |
| TUBE, 4.5X450 | K1 | 120 | 32 |
| TUBE, 5X540 | N5 | 172 | 38 |
| TUBE, 5X550 | N5 | 172 | 38 |
| TUBE, 8X110 | K2 | 121 | 49 |
| TUBE, 8X170 | K1 | 120 | 41 |
| TUBE, 8X240 | K1 | 120 | 41 |
| TUBE, 8X340 | K1 | 120 | 31 |
| TUBE, 8X40 | K2 | 121 | 48 |
| TUBE, 8X400 | K1 | 120 | 31 |
| | | | 41 |
| TUBE, 8X440 | K1 | 120 | 32 |
| TUBE, AIR SUCTION UPPER | K12 | 131 | 3 |
| | L1 | 136 | 2 |
| TUBE, BREATHER | K8 | 127 | 16 |
| | K13 | 132 | 16 |
| TUBE, L. AIR SUCTION | K12 | 131 | 5 |
| | L1 | 136 | 4 |

| Partname | Address | Page | Ref. |
|---|---|---|---|
| TUBE, OUTER | J1 | 104 | 5 |
| TUBE, OVERFLOW | N6 | 173 | 14 |
| TUBE, RESERVE TANK FILLER | N4 | 171 | 14 |
| | N6 | 173 | 16 |
| TUBE, R. AIR SUCTION | K12 | 131 | 4 |
| | L1 | 136 | 3 |

[ V ]

| Partname | Address | Page | Ref. |
|---|---|---|---|
| VALVE ASSY., BYPASS CONTROL SOLENOID | K10 | 129 | 13 |
| | K15 | 134 | 16 |
| VALVE ASSY., EX. AIR INJECTION | K12 | 131 | 7 |
| | L1 | 136 | 8 |
| VALVE ASSY., RELIEF | G3 | 69 | 9 |
| VALVE COMP., AIR CONTROL | K10 | 129 | 1 |
| | K15 | 134 | 1 |
| VALVE COMP., REED | F1 | 51 | 6 |
| VALVE SET, STARTER | H1 | 83 | 5 |
| | | | 6 |
| VALVE, BUTTERFLY | L2 | 137 | 2 |
| | L5 | 140 | 2 |
| VALVE, EX. | F4 | 54 | 6 |
| VALVE, IN. | F4 | 54 | 5 |
| VALVE, RIM | J5 | 108 | 2 |
| | J12 | 115 | 12 |

[ W ]

| Partname | Address | Page | Ref. |
|---|---|---|---|
| WASHER A, BALANCER SIDE | G9 | 75 | 16 |
| WASHER A, HANDLE HOLDER SETTING | J16 | 119 | 29 |
| WASHER B, BALANCER SIDE | G9 | 75 | 17 |
| WASHER B, LOCK | M11 | 162 | 7 |
| | M12 | 163 | 6 |
| WASHER O-RING KIT A | H4 | 86 | 2 |
| WASHER O-RING KIT B | H5 | 87 | 2 |
| WASHER, 10MM | F13 | 63 | 9 |
| | J12 | 115 | 19 |
| WASHER, 10X28X1 | F13 | 63 | 8 |
| WASHER, 10.2MM | G11 | 77 | 24 |
| | N2 | 169 | 42 |
| WASHER, 10.5X27 | F15 | 65 | 6 |
| WASHER, 10.5X31.8 | F13 | 63 | 9 |
| WASHER, 14MM | G13 | 79 | 17 |
| WASHER, 15.2X25 | L8 | 143 | 14 |
| WASHER, 23X37X2.5 | J12 | 115 | 18 |
| | L14 | 149 | 24 |
| WASHER, 6MM | F8 | 58 | 13 |
| | | | 14 |
| | I14 | 101 | 12 |
| | N8 | 175 | 38 |
| WASHER, 6X16 | I7 | 94 | 32 |
| WASHER, 8.5X28 | L4 | 139 | 51 |
| WASHER, CHANGE PEDAL WAVE | L8 | 143 | 13 |
| WASHER, DRAIN PLUG, 12MM | G3 | 69 | 21 |
| | H5 | 87 | 2 |
| WASHER, DRUM STOPPER | G13 | 79 | 16 |
| WASHER, LOCK | I15 | 102 | 10 |

# PART NAME INDEX

2-E12


| Part name | Address | Page | Ref. |
|---|---|---|---|
| WASHER, LOCK | L2 | 137 | 4 |
| | L5 | 140 | 4 |
| WASHER, LOCK, 28MM | G11 | 77 | 28 |
| WASHER, LOCK, 30MM | G11 | 77 | 27 |
| WASHER, NEUTRAL | G6 | 72 | 26 |
| | H5 | 87 | 2 |
| WASHER, OIL BOLT | I7 | 94 | 33 |
| | I9 | 96 | 20 |
| | J8 | 111 | 21 |
| WASHER, PLAIN, 4MM | K3 | 122 | 13 |
| WASHER, PLAIN, 5MM | I4 | 91 | 9 |
| | K11 | 130 | 22 |
| | K16 | 135 | 25 |
| WASHER, PLAIN, 6MM | J14 | 117 | 17 |
| | L7 | 142 | 46 |
| | L9 | 144 | 21 |
| | M2 | 153 | 25 |
| | | | 34 |
| | M3 | 154 | 20 |
| | M12 | 163 | 18 |
| | M16 | 167 | 24 |
| | N5 | 172 | 35 |
| WASHER, PLAIN, 8MM | K3 | 122 | 14 |
| | L4 | 139 | 44 |
| | | | 45 |
| | L7 | 142 | 47 |
| | L8 | 143 | 17 |
| | L10 | 145 | 22 |
| WASHER, RR. COVER GROMMET | L6 | 141 | 42 |
| WASHER, SCREEN SETTING | N9 | 176 | 2 |
| | N11 | 178 | 4 |
| WASHER, SEALING, 12MM | H3 | 85 | 10 |
| | J16 | 119 | 28 |
| WASHER, SEALING, 6MM | F8 | 58 | 15 |
| | H3 | 85 | 11 |
| | H4 | 86 | 2 |
| | H5 | 87 | 2 |
| WASHER, SEALING, 6.5MM | F2 | 52 | 17 |
| | F8 | 58 | 16 |
| | G1 | 67 | 22 |
| | G6 | 72 | 28 |
| | H4 | 86 | 2 |
| | H5 | 87 | 2 |
| WASHER, SEALING, 7MM | G6 | 72 | 27 |
| WASHER, SEAT LOCK | K3 | 122 | 6 |
| WASHER, SPECIAL, 10MM | J2 | 105 | 22 |
| WASHER, SPECIAL, 12MM | G16 | 82 | 21 |
| WASHER, SPECIAL, 8MM | J7 | 110 | 20 |
| WASHER, SPECIAL, 8.5 | L6 | 141 | 43 |
| WASHER, SPLINE, 28MM | G11 | 77 | 26 |
| WASHER, SPLINE, 28X34X1.5 | G11 | 77 | 22 |
| WASHER, SPLINE, 30MM | G11 | 77 | 25 |
| WASHER, SPLINE, 30X36X1.5 | G11 | 77 | 21 |
| WASHER, SPRING, 25MM | F11 | 61 | 18 |
| WASHER, STEERING STEM NUT | I13 | 100 | 29 |
| WASHER, THRUST | L15 | 150 | 7 |
| WASHER, THRUST, 20MM | G11 | 77 | 23 |
| WASHER, THRUST, 22.1X42X3 | F13 | 63 | 11 |
| WASHER, THRUST, 22.1X45X3 | F13 | 63 | 11 |
| WASHER, THRUST, 24MM | G11 | 77 | 20 |
| WASHER, THRUST, 25X40X2 | F11 | 61 | 19 |
| WASHER, THRUST, 28MM | G11 | 77 | 30 |
| WASHER, THRUST, 28.2X56X2 | F11 | 61 | 17 |
| WASHER, THRUST, 5MM | N10 | 177 | 15 |
| | N12 | 179 | 16 |
| WASHER, WAVE | F13 | 63 | 10 |
| WAX ASSY. | H1 | 83 | 4 |
| WEIGHT B, STEERING HANDLE | I12 | 99 | 14 |
| WEIGHT, BALANCE | J5 | 108 | 1 |
| | J11 | 114 | 10 |
| WEIGHT, BALANCER | G9 | 75 | 11 |
| WEIGHT, STEERING HANDLE | I12 | 99 | 13 |
| WHEEL SUB ASSY., FR. | J5 | 108 | 7 |
| WHEEL SUB ASSY., RR. | J11 | 114 | 9 |
| WINDSCREEN SET | N9 | 176 | 6 |
| | N11 | 178 | 7 |
| WINKER ASSY., L. FR. | M6 | 157 | 5 |
| WINKER ASSY., L. RR. | M6 | 157 | 16 |
| WINKER ASSY., R. FR. | M6 | 157 | 1 |
| WINKER ASSY., R. RR. | M6 | 157 | 9 |
| WIRE, HELMET SET | N3 | 170 | 1 |
| WRENCH, EYE, 22MM | N3 | 170 | 15 |
| WRENCH, EYE, 32 | N3 | 170 | 7 |
| WRENCH, HEX., 5MM | N3 | 170 | 8 |
| WRENCH, PLUG, 16.5 | N3 | 170 | 6 |

1 FOREWORD INDEX

2 ENGINE GROUP

3 FRAME GROUP

4 PART NUMBER INDEX

5 PART NAME INDEX

HONDA

The Power of Dreams

E.O A 50.2006.09

Published by Honda Motor Co., Ltd.
Printed in Japan

October 01, 2006

# PARTS CATALOGUE NEWS

Honda Motor Co., Ltd. Service Division

| CODE NO. | 13MEL404 |
|---|---|
| PARTS CATALOGUE NEWS | CBR1000RR<br>CBR1000RR4<br>CBR1000RR5<br>CBR1000RR6<br>CBR1000RR7 |
| NEWS NO. | 001 |

## PARTS CATALOGUE - CORRECTED

Printed in Japan

### ILLUSTRATION - CORRECTED

F-27-1 REAR FENDER (CBR1000RR6/7)

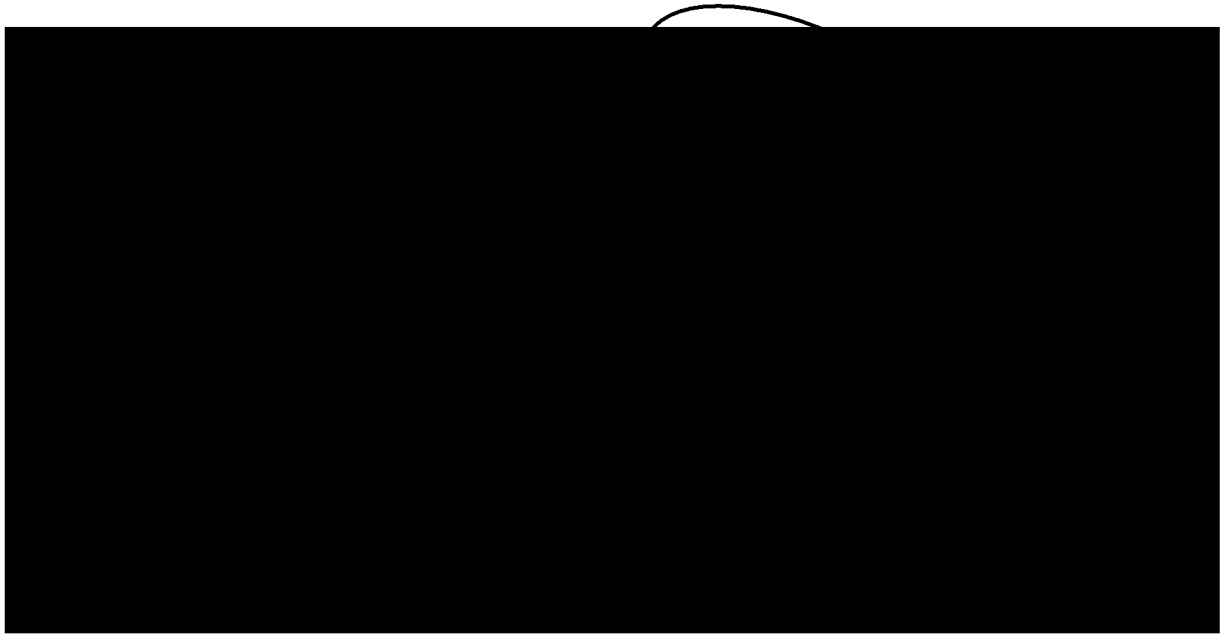

NOTE A:PART NO.CHANGE D:NEWLY PROVIDED E:PART NO.DELETION K:REQUIRED NO.CORRECTION L:APPLICATION SERIAL NO.CORRECTION
T:APPLICATION CORRECTION Z:REMARKS CHANGE

BOOKNo.:13MEL404

## F-39 CAUTION LABEL

| Block No. | Ref. No. | Note | Part No. | Description | Reqd.QTY CBR1000RR 4 | 5 | 6 | 7 | Serial No. | | Parts catalogue code |
|---|---|---|---|---|---|---|---|---|---|---|---|
| F-39 | 1 | T | 17528-MAT-D70 | MARK, HISS ..... | 1 | 1 | 1 | 1 | ------- | ------- | BR,E,ED,EK,F,G,KO,U,2G,2KO,2U |
| | | | | | - | 1 | - | - | ------- | ------- | 2ED,2F,3E,4EK |
| | 8 | T | 87560-MZ0-611 | LABEL, DRIVE (ENGLISH/FRENCH/GERMANY) | 1 | 1 | 1 | 1 | ------- | ------- | E,ED,EK,F,G,2G |
| | | | | | - | 1 | - | - | ------- | ------- | 2ED,2F,3E,4EK |
| | 12 | D | 17528-MAT-D70 | MARK, HISS ..... | - | - | - | 1 | ------- | ------- | 2ED,2F,3E,4EK |
| | 13 | D | 87560-MZ0-611 | LABEL, DRIVE (ENGLISH/FRENCH/GERMANY) | - | - | - | 1 | ------- | ------- | 2ED,2F,3E,4EK |

NOTE A:PART NO.CHANGE D:NEWLY PROVIDED E:PART NO.DELETION K:REQUIRED NO.CORRECTION L:APPLICATION SERIAL NO.CORRECTION
T:APPLICATION CORRECTION Z:REMARKS CHANGE

November 19, 2006

# PARTS CATALOGUE NEWS

Honda Motor Co., Ltd. Service Division

## PARTS CATALOGUE - CORRECTED

Printed in Japan

| CODE NO. | 13MEL404 |
|---|---|
| PARTS CATALOGUE NEWS | CBR1000RR<br>CBR1000RR4<br>CBR1000RR5<br>CBR1000RR6<br>CBR1000RR7 |
| NEWS NO. | 002 |

| Block No. | Ref. No. | Note | Part No. | Description | Reqd. QTY CBR1000RR 4 | 5 | 6 | 7 | Serial No. | | Parts catalogue code |
|---|---|---|---|---|---|---|---|---|---|---|---|
| F-20-3 | 25 | | 93903-25480 | SCREW, TAPPING, 5X20 ..... | - | - | 14 | - | | | |
| | | | | | - | - | - | 14 | ------- | ------- | BR, F, KO, MX, U, 2F |
| | | | | | - | - | - | 14 | ------- | 7M300717 | E, ED, EK, 2ED, 3E, 4EK |
| | | A | 93903-25420 | ..... | - | - | - | 14 | 7M300718 | ------- | E, ED, EK, 2ED, 3E, 4EK |

NOTE A:PART NO.CHANGE D:NEWLY PROVIDED E:PART NO.DELETION K:REQUIRED NO.CORRECTION L:APPLICATION SERIAL NO.CORRECTION
T:APPLICATION CORRECTION Z:REMARKS CHANGE

November 26, 2006

# PARTS CATALOGUE NEWS

Honda Motor Co., Ltd. Service Division

## PARTS CATALOGUE - CORRECTED

Printed in Japan

| CODE NO. | 13MEL404 |
|---|---|
| PARTS CATALOGUE NEWS | CBR1000RR<br>CBR1000RR4<br>CBR1000RR5<br>CBR1000RR6<br>CBR1000RR7 |
| NEWS NO. | 003 |

| Block No. | Ref. No. | Note | Part No. | Description | Reqd. QTY CBR1000RR 4 | 5 | 6 | 7 | Serial No. | | Parts catalogue code |
|---|---|---|---|---|---|---|---|---|---|---|---|
| F-20-3 | 25 | L | 93903-25480 | SCREW, TAPPING, 5X20 ..... | - | - | 14 | 14 | ------- | ------- | F, 2F |
| | | | | | - | - | 14 | - | ------- | ------- | E, ED, EK |
| | | | | | - | - | 14 | - | ------- | 6M200096 | KO |
| | | | | | - | - | 14 | - | ------- | 6M200726 | U |
| | | | | | - | - | 14 | - | ------- | 6M200791 | BR, MX |
| | | | | | - | - | - | 14 | ------- | ------- | BR, KO, MX, U |
| | | | | | - | - | - | 14 | ------- | 7M300717 | E, ED, EK, 2ED, 3E, 4EK |
| | | T | 93903-25420 | ..... | - | - | 14 | - | 6M200097 | ------- | KO |
| | | | | | - | - | 14 | - | 6M200727 | ------- | U |
| | | | | | - | - | 14 | - | 6M200792 | ------- | BR, MX |
| | | | | | - | - | - | 14 | 7M300718 | ------- | E, ED, EK, 2ED, 3E, 4EK |
| F-21-1 | 32 | L | 90103-MCF-D60 | BOLT, FLANGE, 8X35 ..... | - | - | 1 | - | ------- | ------- | BR, MX |
| | | | | | - | - | 1 | - | ------- | 6M200096 | KO |
| | | | | | - | - | 1 | - | ------- | 6M200726 | U |
| | | | | | - | - | 1 | - | ------- | 6M214678 | E, ED, EK, F |

NOTE A:PART NO.CHANGE D:NEWLY PROVIDED E:PART NO.DELETION K:REQUIRED NO.CORRECTION L:APPLICATION SERIAL NO.CORRECTION
T:APPLICATION CORRECTION Z:REMARKS CHANGE

BOOKNo.:13MEL404

| Block No. | Ref. No. | Note | Part No. | Description | Reqd.QTY CBR1000RR 4 | 5 | 6 | 7 | Serial No. | | Parts catalogue code |
|---|---|---|---|---|---|---|---|---|---|---|---|
| | | T | 90103-KCM-620 | ..... | - | - | 1 | - | 6M200097 | ------- | KO |
| | | | | | - | - | 1 | - | 6M200727 | ------- | U |
| | | | | | - | - | 1 | - | 6M214679 | ------- | E,ED,EK,F |
| | | | | | - | - | - | 1 | | | |

NOTE A:PART NO.CHANGE D:NEWLY PROVIDED E:PART NO.DELETION K:REQUIRED NO.CORRECTION L:APPLICATION SERIAL NO.CORRECTION
T:APPLICATION CORRECTION Z:REMARKS CHANGE

December 07, 2006

# PARTS CATALOGUE NEWS

Honda Motor Co., Ltd. Service Division

## PARTS CATALOGUE - CORRECTED

Printed in Japan

| CODE NO. | 13MEL404 |
|---|---|
| PARTS CATALOGUE NEWS | CBR1000RR<br>CBR1000RR4<br>CBR1000RR5<br>CBR1000RR6<br>CBR1000RR7 |
| NEWS NO. | 004 |

| Block No. | Ref. No. | Note | Part No. | Description | Reqd. QTY CBR1000RR 4 | 5 | 6 | 7 | Serial No. | | Parts catalogue code |
|---|---|---|---|---|---|---|---|---|---|---|---|
| F-20-3 | 25 | T | 93903-25480 | SCREW, TAPPING, 5X20 ..... | - | - | 14 | - | ------- | ------- | E, ED, EK, F |
| | | | | | - | - | 14 | - | ------- | 6M200096 | KO |
| | | | | | - | - | 14 | - | ------- | 6M200726 | U |
| | | | | | - | - | 14 | - | ------- | 6M200791 | BR, MX |
| | | | | | - | - | - | 14 | ------- | 7M300717 | E, ED, EK, 2ED, 3E, 4EK |
| | | T | 93903-25420 | ..... | - | - | 14 | - | 6M200097 | ------- | KO |
| | | | | | - | - | 14 | - | 6M200727 | ------- | U |
| | | | | | - | - | 14 | - | 6M200792 | ------- | BR, MX |
| | | | | | - | - | - | 14 | ------- | ------- | BR, F, KO, MX, U, 2F |
| | | | | | - | - | - | 14 | 7M300718 | ------- | E, ED, EK, 2ED, 3E, 4EK |

NOTE A:PART NO. CHANGE D:NEWLY PROVIDED E:PART NO. DELETION K:REQUIRED NO. CORRECTION L:APPLICATION SERIAL NO. CORRECTION
T:APPLICATION CORRECTION Z:REMARKS CHANGE

December 15, 2006

# PARTS CATALOGUE NEWS

Honda Motor Co., Ltd. Service Division

Printed in Japan

| CODE NO. | 13MEL404 |
|---|---|
| PARTS CATALOGUE NEWS | CBR1000RR<br>CBR1000RR4<br>CBR1000RR5<br>CBR1000RR6<br>CBR1000RR7 |
| NEWS NO. | 005 |

## NEW MODEL CBR1000RR7-2BR,2KO,2MX,2U,3F,5ED,6E AND 7EK TYPES

## COMPONENT PARTS-MARKETED

This Parts News lists CBR1000RR7-2BR,2KO,2MX,2U,3F,5ED,6E and 7EK types parts exclusively and is based on CBR1000RR7-BR,KO,MX,U,2ED,2F,3E and 4EK types listed on the CBR1000RR4,5,6,7 Parts Catalogue.
All other parts not listed herein are the same as CBR1000RR7-BR,KO,MX,U,2ED,2F,3E and 4EK types parts.

| Model | Area code | Type | Applicable engine serial No. | Applicable frame serial No. | Applicable throttle body identification No. |
|---|---|---|---|---|---|
| CBR1000RR7 | 2BR | Brazil | SC57E-2300001~ | JH2SC579*7M300001~ | GQA1A A |
| | 2KO | Korea | SC57E-2300001~ | JH2SC57K*7M300001~ | |
| | 2MX | Mexico | SC57E-2300001~ | JH2SC579*7M300001~ | |
| | 2U | Australia | SC57E-2300001~ | JH2SC57U*7M300001~ | |
| | 3F | France | SC57E-2300001~ | JH2SC57C*7M300001~ | |
| | 5ED | European direct sales | SC57E-2300001~ | JH2SC57A*7M300001~ | |
| | 6E | England | SC57E-2300001~ | JH2SC57A*7M300001~ | |
| | 7EK | Ireland | SC57E-2300001~ | JH2SC57A*7M300001~ | |

NOTE A:PART NO.CHANGE D:NEWLY PROVIDED E:PART NO.DELETION K:REQUIRED NO.CORRECTION L:APPLICATION SERIAL NO.CORRECTION
T:APPLICATION CORRECTION Z:REMARKS CHANGE

BOOKNo. :13MEL404

# CBR1000RR (CBR1000RR7).....2BR

| No. | MODEL | | CBR1000RR7 | | | | |
|---|---|---|---|---|---|---|---|
| | COLOR | | Pearl fadeless white | Applicable model | | Applicable block No. | Ref.No. |
| | CODE | | NH-341P | | | | |
| | Name of colored parts | Basic part No. | NH341KC | Initial applicable model | Final applicable model | | |
| 1 | BODY ASSY., FRAME | 50010-MEL-B30 | ZA | | | F-33 | 2 |
| 2 | CLIP, PANEL FIXING | 91549-MW0-790 | ZA | | | F-20-4 | 22 |
| 3 | COWL SET, L. MIDDLE | 64350-MEL-B40 | ZA | | | F-37-1 | 3 |
| 4 | COWL SET, L. UNDER | 64450-MEL-D31 | ZB | | | F-38-1 | 5 |
| 5 | COWL SET, R. MIDDLE | 64300-MEL-B40 | ZA | | | F-37-1 | 2 |
| 6 | COWL SET, R. UNDER | 64400-MEL-D31 | ZB | | | F-38-1 | 4 |
| 7 | COWL SET, RR. SEAT | 77210-MEL-D40 | ZA | | | F-19-1 | 2 |
| 8 | COWL SET, UPPER | 64100-MEL-D40 | ZA | | | F-36-1 | 3 |
| 9 | FENDER COMP., FR. | 61100-MEL-D20 | ZC | | | F-9 | 1 |
| 10 | MARK, RR. SEAT COWL | 64841-MEL-D30 | ZD | | | F-40-9 | 15 |
| 11 | MARK, RR. SEAT COWL | 64842-MEL-D30 | ZE | | | F-40-9 | 16 |
| 12 | MARK, TOP SHELTER | 64859-MEL-D40 | ZA | | | F-40-9 | 21 |
| 13 | MARK, UNDER COWL | 64819-MEL-D30 | ZB | | | F-40-9 | 11 |
| 14 | MARK, UNDER COWL | 64825-MEL-D30 | ZB | | | F-40-9 | 14 |
| 15 | RAIL ASSY., SEAT | 50200-MEL-D20 | ZA | | | F-33 | 12 |
| 16 | SHELTER SET, TOP | 83150-MEL-D40 | ZA | | | F-16 | 5 |
| 17 | STRIPE A, L. MIDDLE COWL | 64814-MEL-D40 | ZA | | | F-40-9 | 6 |
| 18 | STRIPE A, L. TOP SHELTER | 64852-MEL-D40 | ZA | | | F-40-9 | 18 |
| 19 | STRIPE A, R. MIDDLE COWL | 64813-MEL-D40 | ZA | | | F-40-9 | 5 |
| 20 | STRIPE A, R. TOP SHELTER | 64851-MEL-D40 | ZA | | | F-40-9 | 17 |
| 21 | STRIPE B, L. MIDDLE COWL | 64816-MEL-J40 | ZA | | | F-40-9 | 8 |
| 22 | STRIPE B, L. TOP SHELTER | 64854-MEL-D40 | ZA | | | F-40-9 | 20 |
| 23 | STRIPE B, R. MIDDLE COWL | 64815-MEL-J40 | ZA | | | F-40-9 | 7 |
| 24 | STRIPE B, R. TOP SHELTER | 64853-MEL-D40 | ZA | | | F-40-9 | 19 |
| 25 | STRIPE C, L. MIDDLE COWL | 64818-MEL-D40 | ZA | | | F-40-9 | 10 |

NOTE A:PART NO.CHANGE D:NEWLY PROVIDED E:PART NO.DELETION K:REQUIRED NO.CORRECTION L:APPLICATION SERIAL NO.CORRECTION
T:APPLICATION CORRECTION Z:REMARKS CHANGE

BOOKNo.:13MEL404

## CBR1000RR (CBR1000RR7).....2BR

| No. | MODEL | | CBR1000RR7 | | | | |
|---|---|---|---|---|---|---|---|
| | COLOR | | Pearl fadeless white | Applicable model | | Applicable block No. | Ref.No. |
| | CODE | | NH-341P | | | | |
| | Name of colored parts | Basic part No. | NH341KC | Initial applicable model | Final applicable model | | |
| 26 | STRIPE C, R. MIDDLE COWL | 64817-MEL-D40 | ZA | | | F-40-9 | 9 |
| 27 | STRIPE D, L. MIDDLE COWL | 64822-MEL-D40 | ZA | | | F-40-9 | 13 |
| 28 | STRIPE D, R. MIDDLE COWL | 64821-MEL-D40 | ZA | | | F-40-9 | 12 |
| 29 | STRIPE, L. RR. SEAT COWL | 64244-MEL-D40 | ZA | | | F-40-9 | 3 |
| 30 | STRIPE, R. RR. SEAT COWL | 64243-MEL-D40 | ZA | | | F-40-9 | 2 |
| 31 | STRIPE, UPPER COWL | 64101-MEL-D40 | ZA | | | F-40-9 | 1 |
| 32 | STRIPE, WINDSCREEN | 64805-MEL-D40 | ZA | | | F-40-9 | 4 |
| 33 | WINDSCREEN SET | 64250-MEL-D40 | ZA | | | F-36-1 | 7 |

NOTE A:PART NO.CHANGE D:NEWLY PROVIDED E:PART NO.DELETION K:REQUIRED NO.CORRECTION L:APPLICATION SERIAL NO.CORRECTION
T:APPLICATION CORRECTION Z:REMARKS CHANGE

BOOKNo. :13MEL404

# CBR1000RR (CBR1000RR7).....2KO,2MX,2U,3F,5ED,6E,7EK

| No. | MODEL | | CBR1000RR7 | | | | | |
|---|---|---|---|---|---|---|---|---|
| | COLOR | | Pearl siren blue-A | Pearl siren blue-A | Applicable model | | Applicable block No. | Ref.No. |
| | CODE | | PB-123P-A | PB-123P-A | | | | |
| | Name of colored parts | Basic part No. | PB123TA | PB123TB | Initial applicable model | Final applicable model | | |
| 1 | BODY ASSY., FRAME | 50010-MEL-B30 | ZB | ZB | | | F-33 | 2 |
| 2 | BODY SET, FRAME | 50010-MEL-D30 | ZB | - | | | F-33 | 2 |
| 3 | CLIP, PANEL FIXING | 91549-MW0-790 | ZA | ZA | | | F-20-4 | 22 |
| 4 | COWL SET, L. MIDDLE | 64350-MEL-A50 | - | ZA | | | F-37-1 | 3 |
| 5 | COWL SET, L. MIDDLE | 64350-MEL-D50 | ZA | - | | | F-37-1 | 3 |
| 6 | COWL SET, L. UNDER | 64450-MEL-D51 | ZA | ZA | | | F-38-1 | 5 |
| 7 | COWL SET, R. MIDDLE | 64300-MEL-A50 | - | ZA | | | F-37-1 | 2 |
| 8 | COWL SET, R. MIDDLE | 64300-MEL-D50 | ZA | - | | | F-37-1 | 2 |
| 9 | COWL SET, R. UNDER | 64400-MEL-D51 | ZA | ZA | | | F-38-1 | 4 |
| 10 | COWL SET, RR. SEAT | 77210-MEL-D50 | ZA | ZA | | | F-19-1 | 2 |
| 11 | COWL SET, UPPER | 64100-MEL-D50 | ZA | ZA | | | F-36-1 | 17 |
| 12 | FENDER SET, FR. | 61110-MEL-D50 | ZA | ZA | | | F-9 | 5 |
| 13 | MARK, DRIVE CAUTION | 87560-MM5-900 | - | ZA | | | F-39 | 8 |
| 14 | MARK, FR. FENDER | 61111-MEL-D50 | ZA | ZA | | | F-40-10 | 1 |
| 15 | MARK, L. TOP SHELTER | 64852-MEL-D10 | ZA | ZA | | | F-40-10 | 17 |
| 16 | MARK, MIDDLE COWL | 64811-MEL-A50 | - | ZA | | | F-40-10 | 5 |
| 17 | MARK, MIDDLE COWL | 64811-MEL-D50 | ZA | - | | | F-40-10 | 6 |
| 18 | MARK, R. TOP SHELTER | 64851-MEL-D10 | ZA | ZA | | | F-40-10 | 16 |
| 19 | MARK, RR. SEAT COWL | 64841-MEL-D50 | ZA | ZA | | | F-40-10 | 11 |
| 20 | MARK, RR. SEAT COWL | 64842-MEL-D50 | ZA | ZA | | | F-40-10 | 12 |
| 21 | MARK, RR. SEAT COWL | 64843-MEL-D10 | ZA | ZA | | | F-40-10 | 13 |
| 22 | MARK, TOP SHELTER | 64859-MEL-D50 | ZA | ZA | | | F-40-10 | 20 |
| 23 | MARK, UNDER COWL | 64819-MEL-D50 | ZA | ZA | | | F-40-10 | 8 |
| 24 | MARK, UNDER COWL | 64825-MEL-D50 | ZA | ZA | | | F-40-10 | 10 |
| 25 | RAIL ASSY., SEAT | 50200-MEL-D20 | ZB | ZB | | | F-33 | 12 |

NOTE A:PART NO.CHANGE D:NEWLY PROVIDED E:PART NO.DELETION K:REQUIRED NO.CORRECTION L:APPLICATION SERIAL NO.CORRECTION
T:APPLICATION CORRECTION Z:REMARKS CHANGE

BOOKNo.:13MEL404

## CBR1000RR (CBR1000RR7).....2KO,2MX,2U,3F,5ED,6E,7EK

| No. | MODEL | | CBR1000RR7 | | | | | |
|---|---|---|---|---|---|---|---|---|
| | COLOR | | Pearl siren blue-A | Pearl siren blue-A | Applicable model | | Applicable block No. | Ref.No. |
| | CODE | | PB-123P-A | PB-123P-A | | | | |
| | Name of colored parts | Basic part No. | PB123TA | PB123TB | Initial applicable model | Final applicable model | | |
| 26 | SHELTER SET, TOP | 83150-MEL-A50 | ZA | ZA | | | F-16 | 6 |
| 27 | SHELTER SET, TOP | 83150-MEL-D50 | ZA | - | | | F-16 | 5 |
| 28 | STRIPE, L. MIDDLE COWL | 64822-MEL-D50 | ZA | ZA | | | F-40-10 | 9 |
| 29 | STRIPE, L. RR. SEAT COWL | 64845-MEL-D50 | ZA | ZA | | | F-40-10 | 15 |
| 30 | STRIPE, L. TOP SHELTER | 64858-MEL-D10 | ZA | ZA | | | F-40-10 | 19 |
| 31 | STRIPE, L. UPPER COWL | 64102-MEL-D50 | ZA | ZA | | | F-40-10 | 3 |
| 32 | STRIPE, R. MIDDLE COWL | 64812-MEL-D50 | ZA | ZA | | | F-40-10 | 7 |
| 33 | STRIPE, R. RR. SEAT COWL | 64844-MEL-D50 | ZA | ZA | | | F-40-10 | 14 |
| 34 | STRIPE, R. TOP SHELTER | 64857-MEL-D10 | ZA | ZA | | | F-40-10 | 18 |
| 35 | STRIPE, R. UPPER COWL | 64101-MEL-D50 | ZA | ZA | | | F-40-10 | 2 |
| 36 | STRIPE, WINDSCREEN | 64805-MEL-D50 | ZA | ZA | | | F-40-10 | 4 |
| 37 | WHEEL SUB ASSY., FR. | 44650-MEL-D10 | ZA | ZA | | | F-12 | 7 |
| 38 | WINDSCREEN SET | 64250-MEL-D50 | ZA | ZA | | | F-36-1 | 7 |

NOTE A:PART NO.CHANGE D:NEWLY PROVIDED E:PART NO.DELETION K:REQUIRED NO.CORRECTION L:APPLICATION SERIAL NO.CORRECTION
T:APPLICATION CORRECTION Z:REMARKS CHANGE

BOOKNo.:13MEL404

| Block No. | Ref. No. | Part No. | Description | Reqd.QTY CBR1000RR 4 | 5 | 6 | 7 | Base Part No. | Parts catalogue code |
|---|---|---|---|---|---|---|---|---|---|
| F-9 | 1 | | FENDER COMP., FR. | | | | | 61100-MEL-D20ZA | |
| | | | *NHB01*.....GRAPHITE BLACK | - | - | - | 0 | | 2BR, 2K0, 2MX, 2U |
| | | | *R258*.....WINNING RED | - | - | - | 0 | 61100-MEL-D20ZC | 2K0, 2MX, 2U, 3F, 5ED, 6E, 7EK |
| | | | *NHA30M* DIGITAL SILVER METALLIC | - | - | - | 0 | 61100-MEL-D20ZF | 2MX, 2U |
| | 5 | 61110-MEL-D50ZA | FENDER SET, FR. *TYPE1*(WL) .. | - | - | - | 1 | | 2K0, 2MX, 2U, 3F, 5ED, 6E, 7EK |
| F-10 | 1 | 51400-MEL-D41 | FORK ASSY., R. FR. ..... | - | - | - | 1 | 51400-MEL-D21 | 2BR, 2K0, 2U |
| | 5 | 51410-MEL-D41 | TUBE, OUTER ..... | - | - | - | 2 | 51410-MEL-003 | 2BR, 2K0, 2U |
| | 20 | 51500-MEL-D41 | FORK ASSY., L. FR. ..... | - | - | - | 1 | 51500-MEL-D21 | 2BR, 2K0, 2U |
| | 31 | 52497-MEE-003 | MARK, SHOWA ..... | - | - | - | 2 | | 2BR, 2K0, 2U |
| F-11 | 3 | 06455-MEL-D22 | PAD SET, FR. ..... | - | - | - | 2 | 06455-MEL-D21 | |
| | 10 | 45150-MEL-D41 | CALIPER SUB ASSY., L. FR. (TOKICO) | - | - | - | 1 | 45150-MEL-023 | 2BR, 2K0, 2MX, 2U |
| | 12 | 45250-MEL-D41 | CALIPER SUB ASSY., R. FR. .... | - | - | - | 1 | 45250-MEL-023 | 2BR, 2K0, 2MX, 2U |
| F-12 | 7 | 44650-MEL-D10ZA | WHEEL SUB ASSY., FR. | | | | | 44650-MEL-D20ZC | |
| | | | *YR250*.....VIBRANT ORANGE | - | - | - | 1 | | 2K0, 2MX, 2U |
| | | 44650-MEL-D10ZA | *YR250*.....VIBRANT ORANGE | - | - | - | 1 | 44650-MEL-D40 | 3F, 5ED, 6E, 7EK |
| | | 44650-MEL-D40 | ..... | - | - | - | 1 | 44650-MEL-D20ZC | 2BR |
| | 9 | 45120-MEL-D41 | DISK COMP., R. FR. BRAKE ..... | - | - | - | 1 | 45120-MEL-D31 | 2BR, 2K0, 2MX, 2U |
| | 10 | 45220-MEL-D41 | DISK COMP., L. FR. BRAKE ..... | - | - | - | 1 | 45220-MEL-D31 | 2BR, 2K0, 2MX, 2U |
| F-13 | 5 | 43510-MEL-D22 | CYLINDER SUB ASSY., RR. MASTER | - | - | - | 1 | 43510-MEL-D21 | |
| | 9 | 43520-MB2-315 | PISTON SET, MASTER CYLINDER .. | - | - | - | 1 | 43520-MB2-305 | |
| | 14 | 46182-MEL-D21 | CIRCLIP ..... | - | - | - | 1 | 46182-500-013 | |
| F-14-1 | 1 | 06435-MEL-D22 | PAD SET, RR. ..... | - | - | - | 1 | 06435-MEL-D21 | |
| | 7 | 43150-MEL-D41 | CALIPER SUB ASSY., RR. ..... | - | - | - | 1 | 43150-MEL-D31 | 2BR, 2K0, 2MX, 2U |
| F-15 | 9 | 42650-MEL-D40 | WHEEL SUB ASSY., RR. ..... | - | - | - | 1 | 42650-MEL-D20ZC | 2BR |

NOTE A:PART NO.CHANGE D:NEWLY PROVIDED E:PART NO.DELETION K:REQUIRED NO.CORRECTION L:APPLICATION SERIAL NO.CORRECTION
T:APPLICATION CORRECTION Z:REMARKS CHANGE

BOOKNo.:13MEL404

| Block No. | Ref. No. | Part No. | Description | Reqd.QTY CBR1000RR 4 | 5 | 6 | 7 | Base Part No. | Parts catalogue code |
|---|---|---|---|---|---|---|---|---|---|
| | | 42650-MEL-D50 | ..... | - | - | - | 1 | 42650-MEL-D20ZC | 2KO, 2MX, 2U |
| | | 42650-MEL-D50 | ..... | - | - | - | 1 | 42650-MEL-D40 | 3F, 5ED, 6E, 7EK |
| F-16 | 5 | | SHELTER SET, TOP *TYPE1*(WL) . | - | - | - | 0 | 83150-MEL-D30ZA | 2BR, 2KO |
| | | 83150-MEL-D40ZA | ..... | - | - | - | 1 | 83150-MEL-D20ZD | 2BR |
| | | 83150-MEL-D50ZA | ..... | - | - | - | 1 | 83150-MEL-D20ZD | 2KO |
| | | 83150-MEL-D50ZA | ..... | - | - | - | 1 | 83150-MEL-D40ZA | 3F, 5ED, 6E, 7EK |
| | 6 | | SHELTER SET, TOP *TYPE1*(WL) . | - | - | - | 0 | 83150-MEL-A30ZA | 2MX, 2U |
| | | | SHELTER SET, TOP *TYPE3*(WL) . | - | - | - | 0 | 83150-MEL-A30ZC | 2MX, 2U |
| | | 83150-MEL-A50ZA | SHELTER SET, TOP *TYPE1*(WL) . | - | - | - | 1 | 83150-MEL-A20ZB | 2MX, 2U |
| F-19-1 | 2 | | COWL SET, RR. SEAT *TYPE2*(WL) | - | - | - | 0 | 77210-MEL-D30ZA | 2BR, 2MX, 2U |
| | | | COWL SET, RR. SEAT *TYPE4*(WL) | - | - | - | 0 | 77210-MEL-D30ZC | 2MX, 2U |
| | | | COWL SET, RR. SEAT *TYPE1*(WL) | - | - | - | 0 | 77210-MEL-D30ZD | 2KO |
| | | 77210-MEL-D40ZA | ..... | - | - | - | 1 | 77210-MEL-D20ZB | 2BR |
| | | 77210-MEL-D50ZA | ..... | - | - | - | 1 | 77210-MEL-D20ZB | 2KO, 2MX, 2U |
| | | 77210-MEL-D50ZA | ..... | - | - | - | 1 | 77210-MEL-D40ZA | 3F, 5ED, 6E, 7EK |
| F-20-3 | 17 | 17554-MB0-000 | CLIP, BREATHER TUBE ..... | - | - | - | 1 | 17724-102-700 | |
| F-25 | 1 | | CHAIN SET, DRIVE (RK50GF0Z1-120L) (STANDARD LINK 114L) | - | - | - | 0 | 06405-MEL-005 | 2BR, 2KO, 2MX, 2U |
| | | 06405-MEL-P00 | CHAIN SET, DRIVE (DID50VM2-120L) (STANDARD LINK 114L) | - | - | - | 1 | 06405-MEL-003 | 2BR, 2KO, 2MX, 2U |
| | | 06405-MEL-P10 | CHAIN SET, DRIVE (RK50GF0-120L) (STANDARD LINK 114L) | - | - | - | 1 | | 2BR, 2KO, 2MX, 2U |
| | 5 | 40541-MEL-D41 | JOINT, DRIVE CHAIN (DAIDO) ... | - | - | - | 1 | 40545-MEL-003 | 2BR, 2KO, 2MX, 2U |
| | | 40541-MEL-D42 | JOINT, DRIVE CHAIN (RK EXCEL) | - | - | - | 1 | 40545-MEL-005 | 2BR, 2KO, 2MX, 2U |

NOTE A:PART NO.CHANGE D:NEWLY PROVIDED E:PART NO.DELETION K:REQUIRED NO.CORRECTION L:APPLICATION SERIAL NO.CORRECTION
T:APPLICATION CORRECTION Z:REMARKS CHANGE

| Block No. | Ref. No. | Part No. | Description | Reqd.QTY CBR1000RR 4 | 5 | 6 | 7 | Base Part No. | Parts catalogue code |
|---|---|---|---|---|---|---|---|---|---|
| | 14 | 52200-MEL-D40 | SWINGARM SUB ASSY. ..... | - | - | - | 1 | 52200-MEL-D30 | 2BR, 2KO, 2MX, 2U |
| | 16 | 87121-MEE-000 | MARK (UNIT PROLINK) ..... | - | - | - | 2 | 87121-MEL-D20 | 2BR, 2KO, 2MX, 2U |
| | 32 | 17528-MR4-900 | TAPE, TANK GUARD ..... | - | - | - | 1 | | 3F, 5ED, 6E, 7EK |
| F-26 | 1 | 52400-MEL-D41 | CUSHION ASSY., RR. ..... | - | - | - | 1 | 52400-MEL-D21 | 2BR, 2U |
| | | 52400-MEL-K51 | ..... | - | - | - | 1 | 52400-MEL-K21 | 2KO |
| | 24 | 52497-MEE-003 | MARK, SHOWA ..... | - | - | - | 1 | | 2BR, 2KO, 2U |

## F-30-1 BATTERY (CBR1000RR6/7)

| | | | | | | | | | |
|---|---|---|---|---|---|---|---|---|---|
| F-30-1 | 1 | 31500-MCJ-K01 | BATTERY (YTZ10S)(GS YUASA) ... | - | - | - | 1 | 31500-MCJ-K00 | 2KO |
| F-33 | 2 | 50010-MEL-B30ZB | BODY ASSY., FRAME *NH460M*OMEGA SILVER METALLIC | - | - | - | 1 | 50010-MEL-B30ZA | 2KO, 2MX |
| | | 50010-MEL-D30ZB | BODY SET, FRAME *NH460M*OMEGA SILVER METALLIC | - | - | - | 1 | 50010-MEL-D30ZA | 2U, 3F, 5ED, 6E, 7EK |
| | 12 | | RAIL ASSY., SEAT *NH461M*TEMPLE BLACK METALLIC | - | - | - | 0 | 50200-MEL-D20ZA | 2KO, 2MX, 2U, 3F, 5ED, 6E, 7EK |

NOTE A:PART NO.CHANGE D:NEWLY PROVIDED E:PART NO.DELETION K:REQUIRED NO.CORRECTION L:APPLICATION SERIAL NO.CORRECTION
T:APPLICATION CORRECTION Z:REMARKS CHANGE

| Block No. | Ref. No. | Part No. | Description | Reqd.QTY CBR1000RR 4 | 5 | 6 | 7 | Base Part No. | Parts catalogue code |
|---|---|---|---|---|---|---|---|---|---|
| | | 50200-MEL-D20ZB | *NH460M*OMEGA SILVER METALLIC | - | - | - | 1 | | 2K0, 2MX, 2U, 3F, 5ED, 6E, 7EK |
| | 35 | 90841-001-000 | SCREW, RIVET, 1.8X5 ..... | - | - | - | 2 | | 2U |

## F-36-1 UPPER COWL (CBR1000RR6/7)

| Ref. No. | LON | (Relative ref. Number) Description | FRT |
|---|---|---|---|
| 2 | | (1,3,17) | |
| | 4111B4 | COWL, UPPER ..... | 0.9 |

| Block No. | Ref. No. | Part No. | Description | Reqd.QTY 4 | 5 | 6 | 7 | Base Part No. | Parts catalogue code |
|---|---|---|---|---|---|---|---|---|---|
| F-36-1 | 1 | | COWL SET, UPPER *TYPE4* ..... | - | - | - | 0 | 64100-MEL-A30ZD | 2MX, 2U |
| | 2 | | COWL SET, UPPER *TYPE1*(WL) .. | - | - | - | 0 | 64100-MEL-A30ZA | 2BR, 2MX, 2U |
| | | | COWL SET, UPPER *TYPE2*(WL) .. | - | - | - | 0 | 64100-MEL-A30ZB | 2BR, 2MX, 2U |
| | 3 | | COWL SET, UPPER *TYPE1*(WL) .. | - | - | - | 0 | 64100-MEL-D30ZA | 2K0 |
| | | | COWL SET, UPPER *TYPE2*(WL) .. | - | - | - | 0 | 64100-MEL-D30ZB | 2K0 |
| | | | COWL SET, UPPER *TYPE1*(WL) .. | - | - | - | 0 | 64100-MEL-D40ZA | 3F, 5ED, 6E, 7EK |
| | | 64100-MEL-D40ZA | ..... | - | - | - | 1 | | 2BR |
| | 7 | 64250-MEL-D40ZA | WINDSCREEN SET *TYPE1*(WL) ... | - | - | - | 1 | 64250-MEL-000ZA | 2BR |
| | | 64250-MEL-D50ZA | ..... | - | - | - | 1 | 64250-MEL-D40ZA | 3F, 5ED, 6E, 7EK |
| | | 64250-MEL-D50ZA | ..... | - | - | - | 1 | 64250-MEL-000ZA | 2K0, 2MX, 2U |

NOTE A:PART NO.CHANGE D:NEWLY PROVIDED E:PART NO.DELETION K:REQUIRED NO.CORRECTION L:APPLICATION SERIAL NO.CORRECTION
T:APPLICATION CORRECTION Z:REMARKS CHANGE

BOOKNo.:13MEL404

| Block No. | Ref. No. | Part No. | Description | Reqd.QTY CBR1000RR 4 | 5 | 6 | 7 | Base Part No. | Parts catalogue code |
|---|---|---|---|---|---|---|---|---|---|
| | 17 | 64100-MEL-D50ZA | COWL SET, UPPER *TYPE1*(WL) .. | - | - | - | 1 | | 2K0, 2MX, 2U, 3F, 5ED, 6E, 7EK |
| F-37-1 | 2 | | COWL SET, R. MIDDLE *TYPE2* (WL) | - | - | - | 0 | 64300-MEL-A30ZB | 2MX, 2U |
| | | | COWL SET, R. MIDDLE *TYPE4* (WL) | - | - | - | 0 | 64300-MEL-A30ZD | 2MX, 2U |
| | | | COWL SET, R. MIDDLE *TYPE2* (WL) | - | - | - | 0 | 64300-MEL-B30ZB | 2BR |
| | | | ..... | - | - | - | 0 | 64300-MEL-D30ZB | 2K0 |
| | | 64300-MEL-A50ZA | COWL SET, R. MIDDLE *TYPE1* (WL) | - | - | - | 1 | 64300-MEL-A30ZA | 2MX |
| | | 64300-MEL-B40ZA | ..... | - | - | - | 1 | 64300-MEL-B30ZA | 2BR |
| | | 64300-MEL-D50ZA | ..... | - | - | - | 1 | 64300-MEL-A30ZA | 2U |
| | | 64300-MEL-D50ZA | ..... | - | - | - | 1 | 64300-MEL-D30ZA | 2K0 |
| | | 64300-MEL-D50ZA | ..... | - | - | - | 1 | 64300-MEL-D40ZA | 3F, 5ED, 6E, 7EK |
| | 3 | | COWL SET, L. MIDDLE *TYPE2* (WL) | - | - | - | 0 | 64350-MEL-A30ZB | 2MX, 2U |
| | | | COWL SET, L. MIDDLE *TYPE4* (WL) | - | - | - | 0 | 64350-MEL-A30ZD | 2MX, 2U |
| | | | COWL SET, L. MIDDLE *TYPE2* (WL) | - | - | - | 0 | 64350-MEL-B30ZB | 2BR |
| | | | ..... | - | - | - | 0 | 64350-MEL-D30ZB | 2K0 |
| | | 64350-MEL-A50ZA | COWL SET, L. MIDDLE *TYPE1* (WL) | - | - | - | 1 | 64350-MEL-A30ZA | 2MX |
| | | 64350-MEL-B40ZA | ..... | - | - | - | 1 | 64350-MEL-B30ZA | 2BR |
| | | 64350-MEL-D50ZA | ..... | - | - | - | 1 | 64350-MEL-A30ZA | 2U |
| | | 64350-MEL-D50ZA | ..... | - | - | - | 1 | 64350-MEL-D30ZA | 2K0 |
| | | 64350-MEL-D50ZA | ..... | - | - | - | 1 | 64350-MEL-D40ZA | 3F, 5ED, 6E, 7EK |
| | 18 | | MAT D, L. MIDDLE COWL ..... | - | - | - | 0 | 64395-MEL-A20 | 2U |

NOTE A:PART NO.CHANGE D:NEWLY PROVIDED E:PART NO.DELETION K:REQUIRED NO.CORRECTION L:APPLICATION SERIAL NO.CORRECTION
T:APPLICATION CORRECTION Z:REMARKS CHANGE

| Block No. | Ref. No. | Part No. | Description | Reqd.QTY CBR1000RR 4 | 5 | 6 | 7 | Base Part No. | Parts catalogue code |
|---|---|---|---|---|---|---|---|---|---|
| | 19 | | MAT C, L. MIDDLE COWL ..... | - | - | - | 0 | 64394-MEL-A20 | 2U |

## F-38-1 LOWER COWL (CBR1000RR6/7)

| | | | | | | | | | |
|---|---|---|---|---|---|---|---|---|---|
| F-38-1 | 4 | 64400-MEL-D31ZB | COWL SET, R. UNDER *TYPE2*(WL) | - | - | - | 1 | 64400-MEL-D20ZB | 2BR |
| | | 64400-MEL-D51ZA | COWL SET, R. UNDER *TYPE1*(WL) | - | - | - | 1 | 64400-MEL-D20ZB | 2KO, 2MX, 2U |
| | | 64400-MEL-D51ZA | ..... | - | - | - | 1 | 64400-MEL-D30ZB | 3F, 5ED, 6E, 7EK |
| | 5 | 64450-MEL-D31ZB | COWL SET, L. UNDER *TYPE2*(WL) | - | - | - | 1 | 64450-MEL-D20ZB | 2BR |
| | | 64450-MEL-D51ZA | COWL SET, L. UNDER *TYPE1*(WL) | - | - | - | 1 | 64450-MEL-D20ZB | 2KO, 2MX, 2U |
| | | 64450-MEL-D51ZA | ..... | - | - | - | 1 | 64450-MEL-D30ZB | 3F, 5ED, 6E, 7EK |
| | 11 | | INSULATOR, LUGGAGE BOX ..... | - | - | - | 0 | 81257-GAZ-300 | |
| | 17 | 81257-GAZ-300 | INSULATOR, LUGGAGE BOX ..... | - | - | - | 2 | | |
| F-39 | 1 | | MARK, HISS ..... | - | - | - | 0 | 17528-MAT-D70 | 2BR |
| | | 17528-MAT-D70 | ..... | - | - | - | 1 | | 3F, 5ED, 6E, 7EK |
| | 3 | 87505-MEL-B40 | LABEL, TIRE ..... | - | - | - | 1 | 87505-MEL-B20 | 2BR |

NOTE A:PART NO.CHANGE D:NEWLY PROVIDED E:PART NO.DELETION K:REQUIRED NO.CORRECTION L:APPLICATION SERIAL NO.CORRECTION
T:APPLICATION CORRECTION Z:REMARKS CHANGE

BOOKNo.:13MEL404

| Block No. | Ref. No. | Part No. | Description | Reqd.QTY CBR1000RR 4 | 5 | 6 | 7 | Base Part No. | Parts catalogue code |
|---|---|---|---|---|---|---|---|---|---|
| | | 87505-MEL-D40 | ..... | - | - | - | 1 | 87505-MEL-D20 | 2U |
| | | 87505-MEL-K50 | LABEL, TIRE (KOREAN) ..... | - | - | - | 1 | 87505-MEL-K20 | 2KO |
| | | 87505-MEL-M20 | LABEL, TIRE ..... | - | - | - | 1 | 87505-MEL-M30 | 2MX |
| | 8 | 87560-MZO-611 | LABEL, DRIVE (ENGLISH/FRENCH/GERMANY) | - | - | - | 1 | | 3F,5ED,6E,7EK |
| | 12 | | MARK, HISS ..... | - | - | - | 0 | 17528-MAT-D70 | 3F,5ED,6E,7EK |
| | | 17528-MAT-D70 | ..... | - | - | - | 1 | | 2BR |
| F-40-5 | 1 | | STRIPE, WINDSCREEN *TYPE1* ... | - | - | - | 0 | 64805-MEL-000ZA | 2MX,2U |
| | 2 | | MARK, MIDDLE COWL *TYPE1* .... | - | - | - | 0 | 64811-MEL-A30ZA | 2MX,2U |
| | 3 | | MARK, UNDER COWL *TYPE2* (HONDA) | - | - | - | 0 | 64819-MEL-D20ZB | 2MX,2U |
| | 4 | | MARK *TYPE1*(RACING) ..... | - | - | - | 0 | 64820-MEL-A30ZA | 2MX,2U |
| | 6 | | MARK, UNDER COWL *TYPE2* (HONDA) | - | - | - | 0 | 64825-MEL-D20ZB | 2MX,2U |
| | 7 | | MARK, RR. SEAT COWL *TYPE3* (HONDA) | - | - | - | 0 | 64841-MEL-D30ZC | 2MX,2U |
| | 8 | | MARK, RR. SEAT COWL *TYPE4* .. | - | - | - | 0 | 64842-MEL-D30ZC | 2MX,2U |
| | 9 | | MARK, R. TOP SHELTER *TYPE1* . | - | - | - | 0 | 64855-MEL-A30ZA | 2MX,2U |
| | 10 | | MARK, L. TOP SHELTER *TYPE1* . | - | - | - | 0 | 64856-MEL-A30ZA | 2MX,2U |
| F-40-6 | 1 | | STRIPE, UPPER COWL *TYPE1* ... | - | - | - | 0 | 64101-MEL-D30ZA | 2KO |
| | | | STRIPE, UPPER COWL *TYPE2* ... | - | - | - | 0 | 64101-MEL-D30ZB | 2KO |
| | 2 | | STRIPE, WINDSCREEN *TYPE1* ... | - | - | - | 0 | 64805-MEL-000ZA | 2KO |
| | 3 | | STRIPE A, R. MIDDLE COWL *TYPE1* | - | - | - | 0 | 64813-MEL-D20ZA | 2KO |
| | | | ..... | - | - | - | 0 | 64813-MEL-D30ZA | 2KO |
| | 4 | | STRIPE A, L. MIDDLE COWL *TYPE1* | - | - | - | 0 | 64814-MEL-D20ZA | 2KO |

NOTE A:PART NO.CHANGE D:NEWLY PROVIDED E:PART NO.DELETION K:REQUIRED NO.CORRECTION L:APPLICATION SERIAL NO.CORRECTION
T:APPLICATION CORRECTION Z:REMARKS CHANGE

| Block No. | Ref. No. | Part No. | Description | Reqd.QTY CBR1000RR 4 | 5 | 6 | 7 | Base Part No. | Parts catalogue code |
|---|---|---|---|---|---|---|---|---|---|
| | | | ..... | - | - | - | 0 | 64814-MEL-D30ZA | 2K0 |
| | 5 | | STRIPE B, R. MIDDLE COWL *TYPE1* | - | - | - | 0 | 64815-MEL-D30ZA | 2K0 |
| | | | STRIPE B, R. MIDDLE COWL *TYPE2* | - | - | - | 0 | 64815-MEL-D30ZB | 2K0 |
| | 6 | | STRIPE B, L. MIDDLE COWL *TYPE1* | - | - | - | 0 | 64816-MEL-D30ZA | 2K0 |
| | | | STRIPE B, L. MIDDLE COWL *TYPE2* | - | - | - | 0 | 64816-MEL-D30ZB | 2K0 |
| | 7 | | MARK, UNDER COWL *TYPE2* (HONDA) | - | - | - | 0 | 64819-MEL-D20ZB | 2K0 |
| | 8 | | MARK, UNDER COWL *TYPE2* (HONDA) | - | - | - | 0 | 64825-MEL-D20ZB | 2K0 |
| | 9 | | MARK, RR. SEAT COWL *TYPE2* (HONDA) | - | - | - | 0 | 64841-MEL-D20ZB | 2K0 |
| | | | MARK, RR. SEAT COWL *TYPE1* (HONDA) | - | - | - | 0 | 64841-MEL-D30ZA | 2K0 |
| | 10 | | MARK, RR. SEAT COWL *TYPE2* .. | - | - | - | 0 | 64842-MEL-D20ZB | 2K0 |
| | | | MARK, RR. SEAT COWL *TYPE1* .. | - | - | - | 0 | 64842-MEL-D30ZD | 2K0 |
| | 11 | | STRIPE A, R. TOP SHELTER *TYPE1* | - | - | - | 0 | 64851-MEL-D20ZA | 2K0 |
| | | | ..... | - | - | - | 0 | 64851-MEL-D30ZA | 2K0 |
| | 12 | | STRIPE A, L. TOP SHELTER *TYPE1* | - | - | - | 0 | 64852-MEL-D20ZA | 2K0 |
| | | | ..... | - | - | - | 0 | 64852-MEL-D30ZA | 2K0 |
| | 13 | | STRIPE B, R. TOP SHELTER *TYPE1* | - | - | - | 0 | 64853-MEL-D20ZA | 2K0 |
| | | | ..... | - | - | - | 0 | 64853-MEL-D30ZA | 2K0 |
| | 14 | | STRIPE B, L. TOP SHELTER *TYPE1* | - | - | - | 0 | 64854-MEL-D20ZA | 2K0 |

NOTE A:PART NO.CHANGE D:NEWLY PROVIDED E:PART NO.DELETION K:REQUIRED NO.CORRECTION L:APPLICATION SERIAL NO.CORRECTION
T:APPLICATION CORRECTION Z:REMARKS CHANGE

| Block No. | Ref. No. | Part No. | Description | Reqd.QTY CBR1000RR 4 | 5 | 6 | 7 | Base Part No. | Parts catalogue code |
|---|---|---|---|---|---|---|---|---|---|
| | | | ..... | - | - | - | 0 | 64854-MEL-D30ZA | 2KO |
| F-40-7 | 1 | | STRIPE, UPPER COWL *TYPE1* ... | - | - | - | 0 | 64101-MEL-D30ZA | 2BR, 2MX, 2U |
| | | | STRIPE, UPPER COWL *TYPE2* ... | - | - | - | 0 | 64101-MEL-D30ZB | 2BR, 2MX, 2U |
| | 2 | | STRIPE, R. UPPER COWL *TYPE1* | - | - | - | 0 | 64102-MEL-A30ZA | 2BR, 2MX, 2U |
| | | | STRIPE, R. UPPER COWL *TYPE2* | - | - | - | 0 | 64102-MEL-A30ZB | 2BR, 2MX, 2U |
| | 3 | | STRIPE, L. UPPER COWL *TYPE1* | - | - | - | 0 | 64103-MEL-A30ZA | 2BR, 2MX, 2U |
| | | | STRIPE, L. UPPER COWL *TYPE2* | - | - | - | 0 | 64103-MEL-A30ZB | 2BR, 2MX, 2U |
| | 4 | | STRIPE, WINDSCREEN *TYPE1* ... | - | - | - | 0 | 64805-MEL-000ZA | 2BR, 2MX, 2U |
| | 5 | | STRIPE A, R. MIDDLE COWL *TYPE1* | - | - | - | 0 | 64813-MEL-D20ZA | 2BR, 2MX, 2U |
| | | | ..... | - | - | - | 0 | 64813-MEL-D30ZA | 2BR, 2MX, 2U |
| | 6 | | STRIPE A, L. MIDDLE COWL *TYPE1* | - | - | - | 0 | 64814-MEL-D20ZA | 2BR, 2MX, 2U |
| | | | ..... | - | - | - | 0 | 64814-MEL-D30ZA | 2BR, 2MX, 2U |
| | 7 | | STRIPE B, R. MIDDLE COWL *TYPE1* | - | - | - | 0 | 64815-MEL-A30ZA | 2BR, 2MX, 2U |
| | | | STRIPE B, R. MIDDLE COWL *TYPE2* | - | - | - | 0 | 64815-MEL-A30ZB | 2BR, 2MX, 2U |
| | 8 | | STRIPE B, L. MIDDLE COWL *TYPE1* | - | - | - | 0 | 64816-MEL-A30ZA | 2BR, 2MX, 2U |
| | | | STRIPE B, L. MIDDLE COWL *TYPE2* | - | - | - | 0 | 64816-MEL-A30ZB | 2BR, 2MX, 2U |
| | 9 | | MARK, UNDER COWL *TYPE2* (HONDA) | - | - | - | 0 | 64819-MEL-D20ZB | 2BR, 2MX, 2U |
| | 10 | | MARK, UNDER COWL *TYPE2* (HONDA) | - | - | - | 0 | 64825-MEL-D20ZB | 2BR, 2MX, 2U |
| | 11 | | MARK, RR. SEAT COWL *TYPE2* (HONDA) | - | - | - | 0 | 64841-MEL-D20ZB | 2BR, 2MX, 2U |

NOTE A:PART NO.CHANGE D:NEWLY PROVIDED E:PART NO.DELETION K:REQUIRED NO.CORRECTION L:APPLICATION SERIAL NO.CORRECTION
T:APPLICATION CORRECTION Z:REMARKS CHANGE

BOOKNo.:13MEL404

| Block No. | Ref. No. | Part No. | Description | Reqd.QTY CBR1000RR 4 | 5 | 6 | 7 | Base Part No. | Parts catalogue code |
|---|---|---|---|---|---|---|---|---|---|
| | | | MARK, RR. SEAT COWL *TYPE1* (HONDA) | - | - | - | 0 | 64841-MEL-D30ZA | 2BR, 2MX, 2U |
| | 12 | | MARK, RR. SEAT COWL *TYPE2* .. | - | - | - | 0 | 64842-MEL-D20ZB | 2BR, 2MX, 2U |
| | | | ..... | - | - | - | 0 | 64842-MEL-D30ZA | 2BR, 2MX, 2U |
| | 13 | | STRIPE A, R. TOP SHELTER *TYPE1* | - | - | - | 0 | 64851-MEL-D20ZA | 2BR, 2MX, 2U |
| | | | ..... | - | - | - | 0 | 64851-MEL-D30ZA | 2BR, 2MX, 2U |
| | 14 | | STRIPE A, L. TOP SHELTER *TYPE1* | - | - | - | 0 | 64852-MEL-D20ZA | 2BR, 2MX, 2U |
| | | | ..... | - | - | - | 0 | 64852-MEL-D30ZA | 2BR, 2MX, 2U |
| | 15 | | STRIPE B, R. TOP SHELTER *TYPE1* | - | - | - | 0 | 64853-MEL-D20ZA | 2BR, 2MX, 2U |
| | | | ..... | - | - | - | 0 | 64853-MEL-D30ZA | 2BR, 2MX, 2U |
| | 16 | | STRIPE B, L. TOP SHELTER *TYPE1* | - | - | - | 0 | 64854-MEL-D20ZA | 2BR, 2MX, 2U |
| | | | ..... | - | - | - | 0 | 64854-MEL-D30ZA | 2BR, 2MX, 2U |
| F-40-8 | 1 | | STRIPE, UPPER COWL *TYPE1* ... | - | - | - | 0 | 64101-MEL-D40ZA | 3F, 5ED, 6E, 7EK |
| | 2 | | STRIPE, R. RR. SEAT COWL *TYPE1* | - | - | - | 0 | 64243-MEL-D40ZA | 3F, 5ED, 6E, 7EK |
| | 3 | | STRIPE, L. RR. SEAT COWL *TYPE1* | - | - | - | 0 | 64244-MEL-D40ZA | 3F, 5ED, 6E, 7EK |
| | 4 | | STRIPE, WINDSCREEN *TYPE1* ... | - | - | - | 0 | 64805-MEL-D40ZA | 3F, 5ED, 6E, 7EK |
| | 5 | | STRIPE A, R. MIDDLE COWL *TYPE1* | - | - | - | 0 | 64813-MEL-D40ZA | 3F, 5ED, 6E, 7EK |
| | 6 | | STRIPE A, L. MIDDLE COWL *TYPE1* | - | - | - | 0 | 64814-MEL-D40ZA | 3F, 5ED, 6E, 7EK |
| | 7 | | STRIPE B, R. MIDDLE COWL *TYPE1* | - | - | - | 0 | 64815-MEL-D40ZA | 3F, 5ED, 6E, 7EK |
| | 8 | | STRIPE B, L. MIDDLE COWL *TYPE1* | - | - | - | 0 | 64816-MEL-D40ZA | 3F, 5ED, 6E, 7EK |

NOTE A:PART NO.CHANGE D:NEWLY PROVIDED E:PART NO.DELETION K:REQUIRED NO.CORRECTION L:APPLICATION SERIAL NO.CORRECTION
T:APPLICATION CORRECTION Z:REMARKS CHANGE

BOOKNo.:13MEL404

| Block No. | Ref. No. | Part No. | Description | Reqd.QTY CBR1000RR 4 | 5 | 6 | 7 | Base Part No. | Parts catalogue code |
|---|---|---|---|---|---|---|---|---|---|
| | 9 | | STRIPE C, R. MIDDLE COWL *TYPE1* | - | - | - | 0 | 64817-MEL-D40ZA | 3F,5ED,6E,7EK |
| | 10 | | STRIPE C, L. MIDDLE COWL *TYPE1* | - | - | - | 0 | 64818-MEL-D40ZA | 3F,5ED,6E,7EK |
| | 11 | | MARK, UNDER COWL *TYPE2* (HONDA) | - | - | - | 0 | 64819-MEL-D30ZB | 3F,5ED,6E,7EK |
| | 12 | | STRIPE D, R. MIDDLE COWL *TYPE1* | - | - | - | 0 | 64821-MEL-D40ZA | 3F,5ED,6E,7EK |
| | 13 | | STRIPE D, L. MIDDLE COWL *TYPE1* | - | - | - | 0 | 64822-MEL-D40ZA | 3F,5ED,6E,7EK |
| | 14 | | MARK, UNDER COWL *TYPE2* (HONDA) | - | - | - | 0 | 64825-MEL-D30ZB | 3F,5ED,6E,7EK |
| | 15 | | MARK, RR. SEAT COWL *TYPE4* (HONDA) | - | - | - | 0 | 64841-MEL-D30ZD | 3F,5ED,6E,7EK |
| | 16 | | MARK, RR. SEAT COWL *TYPE5* .. | - | - | - | 0 | 64842-MEL-D30ZE | 3F,5ED,6E,7EK |
| | 17 | | STRIPE A, R. TOP SHELTER *TYPE1* | - | - | - | 0 | 64851-MEL-D40ZA | 3F,5ED,6E,7EK |
| | 18 | | STRIPE A, L. TOP SHELTER *TYPE1* | - | - | - | 0 | 64852-MEL-D40ZA | 3F,5ED,6E,7EK |
| | 19 | | STRIPE B, R. TOP SHELTER *TYPE1* | - | - | - | 0 | 64853-MEL-D40ZA | 3F,5ED,6E,7EK |
| | 20 | | STRIPE B, L. TOP SHELTER *TYPE1* | - | - | - | 0 | 64854-MEL-D40ZA | 3F,5ED,6E,7EK |
| | 21 | | MARK, TOP SHELTER *TYPE1*(HRC) | - | - | - | 0 | 64859-MEL-D40ZA | 3F,5ED,6E,7EK |

NOTE A:PART NO.CHANGE D:NEWLY PROVIDED E:PART NO.DELETION K:REQUIRED NO.CORRECTION L:APPLICATION SERIAL NO.CORRECTION
T:APPLICATION CORRECTION Z:REMARKS CHANGE

BOOKNo.:13MEL404

## F-40-9 STRIPE/MARK (10)

| Block No. | Ref. No. | Part No. | Description | Reqd.QTY CBR1000RR 4 | 5 | 6 | 7 | Base Part No. | Parts catalogue code |
|---|---|---|---|---|---|---|---|---|---|
| F-40-9 | 1 | 64101-MEL-D40ZA | STRIPE, UPPER COWL *TYPE1* ... | - | - | - | 1 | | 2BR |
| | 2 | 64243-MEL-D40ZA | STRIPE, R. RR. SEAT COWL *TYPE1* | - | - | - | 1 | | 2BR |
| | 3 | 64244-MEL-D40ZA | STRIPE, L. RR. SEAT COWL *TYPE1* | - | - | - | 1 | | 2BR |
| | 4 | 64805-MEL-D40ZA | STRIPE, WINDSCREEN *TYPE1* ... | - | - | - | 1 | | 2BR |
| | 5 | 64813-MEL-D40ZA | STRIPE A, R. MIDDLE COWL *TYPE1* | - | - | - | 1 | | 2BR |
| | 6 | 64814-MEL-D40ZA | STRIPE A, L. MIDDLE COWL *TYPE1* | - | - | - | 1 | | 2BR |
| | 7 | 64815-MEL-J40ZA | STRIPE B, R. MIDDLE COWL *TYPE1* | - | - | - | 1 | | 2BR |
| | 8 | 64816-MEL-J40ZA | STRIPE B, L. MIDDLE COWL *TYPE1* | - | - | - | 1 | | 2BR |

NOTE A:PART NO.CHANGE D:NEWLY PROVIDED E:PART NO.DELETION K:REQUIRED NO.CORRECTION L:APPLICATION SERIAL NO.CORRECTION
T:APPLICATION CORRECTION Z:REMARKS CHANGE

BOOKNo.:13MEL404

| Block No. | Ref. No. | Part No. | Description | Reqd.QTY CBR1000RR 4 | 5 | 6 | 7 | Base Part No. | Parts catalogue code |
|---|---|---|---|---|---|---|---|---|---|
| | 9 | 64817-MEL-D40ZA | STRIPE C, R. MIDDLE COWL *TYPE1* | - | - | - | 1 | 2BR | |
| | 10 | 64818-MEL-D40ZA | STRIPE C, L. MIDDLE COWL *TYPE1* | - | - | - | 1 | 2BR | |
| | 11 | 64819-MEL-D30ZB | MARK, UNDER COWL *TYPE2* (HONDA) | - | - | - | 1 | 2BR | |
| | 12 | 64821-MEL-D40ZA | STRIPE D, R. MIDDLE COWL *TYPE1* | - | - | - | 1 | 2BR | |
| | 13 | 64822-MEL-D40ZA | STRIPE D, L. MIDDLE COWL *TYPE1* | - | - | - | 1 | 2BR | |
| | 14 | 64825-MEL-D30ZB | MARK, UNDER COWL *TYPE2* (HONDA) | - | - | - | 1 | 2BR | |
| | 15 | 64841-MEL-D30ZD | MARK, RR. SEAT COWL *TYPE4* (HONDA) | - | - | - | 1 | 2BR | |
| | 16 | 64842-MEL-D30ZE | MARK, RR. SEAT COWL *TYPE5* .. | - | - | - | 2 | 2BR | |
| | 17 | 64851-MEL-D40ZA | STRIPE A, R. TOP SHELTER *TYPE1* | - | - | - | 1 | 2BR | |
| | 18 | 64852-MEL-D40ZA | STRIPE A, L. TOP SHELTER *TYPE1* | - | - | - | 1 | 2BR | |
| | 19 | 64853-MEL-D40ZA | STRIPE B, R. TOP SHELTER *TYPE1* | - | - | - | 1 | 2BR | |
| | 20 | 64854-MEL-D40ZA | STRIPE B, L. TOP SHELTER *TYPE1* | - | - | - | 1 | 2BR | |
| | 21 | 64859-MEL-D40ZA | MARK, TOP SHELTER *TYPE1*(HRC) | - | - | - | 3 | 2BR | |

NOTE A:PART NO.CHANGE D:NEWLY PROVIDED E:PART NO.DELETION K:REQUIRED NO.CORRECTION L:APPLICATION SERIAL NO.CORRECTION
T:APPLICATION CORRECTION Z:REMARKS CHANGE

BOOKNo.:13MEL404

## F-40-10 STRIPE/MARK (11)

| Block No. | Ref. No. | Part No. | Description | Reqd.QTY CBR1000RR 4 | 5 | 6 | 7 | Base Part No. | Parts catalogue code |
|---|---|---|---|---|---|---|---|---|---|
| F-40-10 | 1 | 61111-MEL-D50ZA | MARK, FR. FENDER *TYPE1* (REPSOL) | - | - | - | 1 | | 2K0, 2MX, 2U, 3F, 5ED, 6E, 7EK |
| | 2 | 64101-MEL-D50ZA | STRIPE, R. UPPER COWL *TYPE1* | - | - | - | 1 | | 2K0, 2MX, 2U, 3F, 5ED, 6E, 7EK |
| | 3 | 64102-MEL-D50ZA | STRIPE, L. UPPER COWL *TYPE1* | - | - | - | 1 | | 2K0, 2MX, 2U, 3F, 5ED, 6E, 7EK |
| | 4 | 64805-MEL-D50ZA | STRIPE, WINDSCREEN *TYPE1* ... | - | - | - | 1 | | 2K0, 2MX, 2U, 3F, 5ED, 6E, 7EK |
| | 5 | 64811-MEL-A50ZA | MARK, MIDDLE COWL *TYPE1* .... | - | - | - | 2 | | 2MX |
| | 6 | 64811-MEL-D50ZA | MARK, MIDDLE COWL *TYPE1* .... | - | - | - | 2 | | 2K0, 2U, 3F, 5ED, 6E, 7EK |
| | 7 | 64812-MEL-D50ZA | STRIPE, R. MIDDLE COWL *TYPE1* | - | - | - | 1 | | 2K0, 2MX, 2U, 3F, 5ED, 6E, 7EK |
| | 8 | 64819-MEL-D50ZA | MARK, UNDER COWL *TYPE1* (HONDA) | - | - | - | 1 | | 2K0, 2MX, 2U, 3F, 5ED, 6E, 7EK |
| | 9 | 64822-MEL-D50ZA | STRIPE, L. MIDDLE COWL *TYPE1* | - | - | - | 1 | | 2K0, 2MX, 2U, 3F, 5ED, 6E, 7EK |
| | 10 | 64825-MEL-D50ZA | MARK, UNDER COWL *TYPE1* (HONDA) | - | - | - | 1 | | 2K0, 2MX, 2U, 3F, 5ED, 6E, 7EK |

NOTE A:PART NO.CHANGE D:NEWLY PROVIDED E:PART NO.DELETION K:REQUIRED NO.CORRECTION L:APPLICATION SERIAL NO.CORRECTION
T:APPLICATION CORRECTION Z:REMARKS CHANGE

BOOKNo.:13MEL404

| Block No. | Ref. No. | Part No. | Description | Reqd.QTY CBR1000RR 4 | 5 | 6 | 7 | Base Part No. | Parts catalogue code |
|---|---|---|---|---|---|---|---|---|---|
| | 11 | 64841-MEL-D50ZA | MARK, RR. SEAT COWL *TYPE1* (HRC) | - | - | - | 1 | | 2K0, 2MX, 2U, 3F, 5ED, 6E, 7EK |
| | 12 | 64842-MEL-D50ZA | MARK, RR. SEAT COWL *TYPE1* .. | - | - | - | 2 | | 2K0, 2MX, 2U, 3F, 5ED, 6E, 7EK |
| | 13 | 64843-MEL-D10ZA | MARK, RR. SEAT COWL *TYPE1* (REPSOL) | - | - | - | 1 | | 2K0, 2MX, 2U, 3F, 5ED, 6E, 7EK |
| | 14 | 64844-MEL-D50ZA | STRIPE, R. RR. SEAT COWL *TYPE1* | - | - | - | 1 | | 2K0, 2MX, 2U, 3F, 5ED, 6E, 7EK |
| | 15 | 64845-MEL-D50ZA | STRIPE, L. RR. SEAT COWL *TYPE1* | - | - | - | 1 | | 2K0, 2MX, 2U, 3F, 5ED, 6E, 7EK |
| | 16 | 64851-MEL-D10ZA | MARK, R. TOP SHELTER *TYPE1* . | - | - | - | 1 | | 2K0, 2MX, 2U, 3F, 5ED, 6E, 7EK |
| | 17 | 64852-MEL-D10ZA | MARK, L. TOP SHELTER *TYPE1* . | - | - | - | 1 | | 2K0, 2MX, 2U, 3F, 5ED, 6E, 7EK |
| | 18 | 64857-MEL-D10ZA | STRIPE, R. TOP SHELTER *TYPE1* | - | - | - | 1 | | 2K0, 2MX, 2U, 3F, 5ED, 6E, 7EK |
| | 19 | 64858-MEL-D10ZA | STRIPE, L. TOP SHELTER *TYPE1* | - | - | - | 1 | | 2K0, 2MX, 2U, 3F, 5ED, 6E, 7EK |
| | 20 | 64859-MEL-D50ZA | MARK, TOP SHELTER *TYPE1*(HRC) | - | - | - | 2 | | 2K0, 2MX, 2U, 3F, 5ED, 6E, 7EK |

NOTE A:PART NO.CHANGE D:NEWLY PROVIDED E:PART NO.DELETION K:REQUIRED NO.CORRECTION L:APPLICATION SERIAL NO.CORRECTION
T:APPLICATION CORRECTION Z:REMARKS CHANGE

December 31, 2006

# PARTS CATALOGUE NEWS

Honda Motor Co., Ltd. Service Division

| | |
|---|---|
| CODE NO. | 13MEL404 |
| PARTS CATALOGUE NEWS | CBR1000RR<br>CBR1000RR4<br>CBR1000RR5<br>CBR1000RR6<br>CBR1000RR7 |
| NEWS NO. | 006 |

## PARTS CATALOGUE - CORRECTED

Printed in Japan

ILLUSTRATION - CORRECTED

F-33 FRAME BODY

NOTE A:PART NO.CHANGE D:NEWLY PROVIDED E:PART NO.DELETION K:REQUIRED NO.CORRECTION L:APPLICATION SERIAL NO.CORRECTION
T:APPLICATION CORRECTION Z:REMARKS CHANGE

January 25, 2007

# PARTS CATALOGUE NEWS

Honda Motor Co., Ltd. Service Division

## PARTS CATALOGUE - CORRECTED

Printed in Japan

| CODE NO. | 13MEL404 |
|---|---|
| PARTS CATALOGUE NEWS | CBR1000RR<br>CBR1000RR4<br>CBR1000RR5<br>CBR1000RR6<br>CBR1000RR7 |
| NEWS NO. | 007 |

| Block No. | Ref. No. | Note | Part No. | Description | Reqd. QTY CBR1000RR 4 | 5 | 6 | 7 | Serial No. | Parts catalogue code |
|---|---|---|---|---|---|---|---|---|---|---|
| E-12 | | | OIL PAN/OIL PUMP | | | | | | | |
| E-12 | 10 | | 15410-MCJ-003 | CARTRIDGE, OIL FILTER (TOYO ROKI) | 1 | 1 | 1 | - | | |
| | | | | | - | - | - | 1 | ------- 2313883 | |

NOTE A:PART NO.CHANGE D:NEWLY PROVIDED E:PART NO.DELETION K:REQUIRED NO.CORRECTION L:APPLICATION SERIAL NO.CORRECTION
T:APPLICATION CORRECTION Z:REMARKS CHANGE

BOOKNo.:13MEL404

| Block No. | Ref. No. | Note | Part No. | Description | Reqd.QTY CBR1000RR 4 | 5 | 6 | 7 | Serial No. | Parts catalogue code |
|---|---|---|---|---|---|---|---|---|---|---|
| | | A | 15410-MFJ-D01 | ..... | - | - | - | 1 | 2313884 | |
| | 25 | D | 15010-MCE-H50 | FILTER SET, OIL ..... | - | - | (1) | - | | |
| | | | | | - | - | - | (1) | ------- 2313883 | |
| | | A | 15010-MCE-H51 | ..... | - | - | - | (1) | 2313884 | |

NOTE A:PART NO.CHANGE D:NEWLY PROVIDED E:PART NO.DELETION K:REQUIRED NO.CORRECTION L:APPLICATION SERIAL NO.CORRECTION
T:APPLICATION CORRECTION Z:REMARKS CHANGE

February 08, 2007

# PARTS CATALOGUE NEWS

Honda Motor Co., Ltd. Service Division

| CODE NO. | 13MEL404 |
|---|---|
| PARTS CATALOGUE NEWS | CBR1000RR<br>CBR1000RR4<br>CBR1000RR5<br>CBR1000RR6<br>CBR1000RR7 |
| NEWS NO. | 008 |

## PARTS CATALOGUE - CORRECTED

Printed in Japan

CBR1000RR (CBR1000RR7).....E,ED,EK,F,KO

| No. | MODEL | | CBR1000RR7 | | | | | |
|---|---|---|---|---|---|---|---|---|
| | COLOR | | Graphite black | Winning red | Applicable model | | Applicable block No. | Ref.No. |
| | CODE | | NH-B01 | R-258 | | | | |
| | Name of colored parts | Basic part No. | NHB01DA | R258BA | Initial applicable model | Final applicable model | | |
| 1 | BODY SET, FRAME | 50010-MEL-B30 | ZA | ZA | | | F-33 | 2 |
| 2 | BODY SET, FRAME | 50010-MEL-D30 | ZA | ZA | | | F-33 | 2 |
| 3 | CLIP, PANEL FIXING | 91549-MW0-790 | ZA | ZA | | | F-20-4 | 22 |
| 4 | COWL SET, L. MIDDLE | 64350-MEL-D30 | ZA | ZB | | | F-37-1 | 3 |
| 5 | COWL SET, L. UNDER | 64450-MEL-D20 | ZB | ZB | | 7M300040 | F-38-1 | 5 |
| 5 | COWL SET, L. UNDER | 64450-MEL-D20 | ZB | ZB | | 7M300395 | F-38-1 | 5 |
| 5 | COWL SET, L. UNDER | 64450-MEL-D20 | ZB | ZB | | 7M303457 | F-38-1 | 5 |
| 5 | COWL SET, L. UNDER | 64450-MEL-D21 | ZB | ZB | 7M300040 | | F-38-1 | 5 |
| 5 | COWL SET, L. UNDER | 64450-MEL-D21 | ZB | ZB | 7M300395 | | F-38-1 | 5 |
| 5 | COWL SET, L. UNDER | 64450-MEL-D21 | ZB | ZB | 7M303457 | | F-38-1 | 5 |
| 6 | COWL SET, R. MIDDLE | 64300-MEL-D30 | ZA | ZB | | | F-37-1 | 2 |
| 7 | COWL SET, R. UNDER | 64400-MEL-D20 | ZB | ZB | | 7M300040 | F-38-1 | 4 |
| 7 | COWL SET, R. UNDER | 64400-MEL-D20 | ZB | ZB | | 7M300395 | F-38-1 | 4 |
| 7 | COWL SET, R. UNDER | 64400-MEL-D20 | ZB | ZB | | 7M303457 | F-38-1 | 4 |
| 7 | COWL SET, R. UNDER | 64400-MEL-D21 | ZB | ZB | 7M300040 | | F-38-1 | 4 |
| 7 | COWL SET, R. UNDER | 64400-MEL-D21 | ZB | ZB | 7M300395 | | F-38-1 | 4 |
| 7 | COWL SET, R. UNDER | 64400-MEL-D21 | ZB | ZB | 7M303457 | | F-38-1 | 4 |
| 8 | COWL SET, RR. SEAT | 77210-MEL-D20 | - | ZB | | | F-19-1 | 2 |
| 9 | COWL SET, RR. SEAT | 77210-MEL-D30 | ZD | - | | | F-19-1 | 2 |
| 10 | COWL SET, UPPER | 64100-MEL-D30 | ZA | ZB | | | F-36-1 | 3 |
| 11 | FENDER COMP., FR. | 61100-MEL-D20 | ZA | ZC | | | F-9 | 1 |
| 12 | MARK, RR. SEAT COWL | 64841-MEL-D20 | - | ZB | | | F-40-6 | 9 |
| 13 | MARK, RR. SEAT COWL | 64841-MEL-D30 | ZA | - | | | F-40-6 | 9 |
| 14 | MARK, RR. SEAT COWL | 64842-MEL-D20 | - | ZB | | | F-40-6 | 10 |
| 15 | MARK, RR. SEAT COWL | 64842-MEL-D30 | ZD | - | | | F-40-6 | 10 |

NOTE A:PART NO.CHANGE D:NEWLY PROVIDED E:PART NO.DELETION K:REQUIRED NO.CORRECTION L:APPLICATION SERIAL NO.CORRECTION
T:APPLICATION CORRECTION Z:REMARKS CHANGE

BOOKNo.:13MEL404

CBR1000RR (CBR1000RR7).....MX,U

| No. | MODEL | | CBR1000RR7 | | | | | | |
|---|---|---|---|---|---|---|---|---|---|
| | COLOR | | Graphite black | Winning red | Digital silver metallic | Applicable model | | Applicable block No. | Ref.No. |
| | CODE | | NH-B01 | R-258 | NH-A30M | | | | |
| | Name of colored parts | Basic part No. | NHB01DB | R258BB | NHA30 | Initial applicable model | Final applicable model | | |
| 1 | BODY SET, FRAME | 50010-MEL-B30 | ZA | ZA | ZA | | | F-33 | 2 |
| 2 | BODY SET, FRAME | 50010-MEL-D30 | ZA | ZA | ZA | | | F-33 | 2 |
| 3 | CLIP, PANEL FIXING | 91549-MW0-790 | ZA | ZA | ZA | | | F-20-4 | 22 |
| 4 | COWL SET, L. MIDDLE | 64350-MEL-A30 | ZA | ZB | ZD | | | F-37-1 | 3 |
| 5 | COWL SET, L. UNDER | 64450-MEL-D20 | ZB | ZB | ZB | | 7M300245 | F-38-1 | 5 |
| 5 | COWL SET, L. UNDER | 64450-MEL-D20 | ZB | ZB | ZB | | 7M300407 | F-38-1 | 5 |
| 5 | COWL SET, L. UNDER | 64450-MEL-D21 | ZB | ZB | ZB | 7M300246 | | F-38-1 | 5 |
| 5 | COWL SET, L. UNDER | 64450-MEL-D21 | ZB | ZB | ZB | 7M300408 | | F-38-1 | 5 |
| 6 | COWL SET, R. MIDDLE | 64300-MEL-A30 | ZA | ZB | ZD | | | F-37-1 | 2 |
| 7 | COWL SET, R. UNDER | 64400-MEL-D20 | ZB | ZB | ZB | | 7M300245 | F-38-1 | 4 |
| 7 | COWL SET, R. UNDER | 64400-MEL-D20 | ZB | ZB | ZB | | 7M300407 | F-38-1 | 4 |
| 7 | COWL SET, R. UNDER | 64400-MEL-D21 | ZB | ZB | ZB | 7M300246 | | F-38-1 | 4 |
| 7 | COWL SET, R. UNDER | 64400-MEL-D21 | ZB | ZB | ZB | 7M300408 | | F-38-1 | 4 |
| 8 | COWL SET, RR. SEAT | 77210-MEL-D30 | ZA | - | ZC | | | F-19-1 | 2 |
| 9 | COWL SET, UPPER | 64100-MEL-A30 | - | - | ZD | | | F-36-1 | 1 |
| 10 | COWL SET, UPPER | 64100-MEL-A30 | ZA | ZB | - | | | F-36-1 | 2 |
| 11 | FENDER COMP., FR. | 61100-MEL-D20 | ZA | ZC | ZF | | | F-9 | 1 |
| 12 | MARK | 64820-MEL-A30 | - | - | ZA | | | F-40-5 | 4 |
| 13 | MARK, DRIVE CAUTION | 87560-MM5-900 | ZA | ZA | ZA | | | F-39 | 8 |
| 14 | MARK, L. TOP SHELTER | 64856-MEL-A30 | - | - | ZA | | | F-40-5 | 10 |
| 15 | MARK, MIDDLE COWL | 64811-MEL-A30 | - | - | ZA | | | F-40-5 | 2 |
| 16 | MARK, R. TOP SHELTER | 64855-MEL-A30 | - | - | ZA | | | F-40-5 | 9 |
| 17 | MARK, RR. SEAT COWL | 64841-MEL-D20 | - | ZB | - | | | F-40-7 | 11 |
| 18 | MARK, RR. SEAT COWL | 64841-MEL-D30 | - | - | ZC | | | F-40-5 | 7 |
| 19 | MARK, RR. SEAT COWL | 64841-MEL-D30 | ZA | - | - | | | F-40-7 | 11 |
| 20 | MARK, RR. SEAT COWL | 64842-MEL-D20 | - | ZB | - | | | F-40-7 | 12 |
| 21 | MARK, RR. SEAT COWL | 64842-MEL-D30 | - | - | ZC | | | F-40-5 | 8 |
| 22 | MARK, RR. SEAT COWL | 64842-MEL-D30 | ZA | - | - | | | F-40-7 | 12 |
| 23 | MARK, UNDER COWL | 64819-MEL-D20 | - | - | ZB | | | F-40-5 | 3 |
| 24 | MARK, UNDER COWL | 64819-MEL-D20 | ZB | ZB | - | | | F-40-7 | 9 |
| 25 | MARK, UNDER COWL | 64825-MEL-D20 | - | - | ZB | | | F-40-5 | 6 |

NOTE A:PART NO.CHANGE D:NEWLY PROVIDED E:PART NO.DELETION K:REQUIRED NO.CORRECTION L:APPLICATION SERIAL NO.CORRECTION
T:APPLICATION CORRECTION Z:REMARKS CHANGE

BOOKNo.:13MEL404

CBR1000RR (CBR1000RR7).....BR

| No. | MODEL | | CBR1000RR7 | | | | | |
|---|---|---|---|---|---|---|---|---|
| | COLOR | | Graphite black | Winning red | Applicable model | | Applicable block No. | Ref.No. |
| | CODE | | NH-B01 | R-258 | | | | |
| | Name of colored parts | Basic part No. | NHB01DB | R258BB | Initial applicable model | Final applicable model | | |
| 1 | BODY SET, FRAME | 50010-MEL-B30 | ZA | ZA | | | F-33 | 2 |
| 2 | CLIP, PANEL FIXING | 91549-MW0-790 | ZA | ZA | | | F-20-4 | 22 |
| 3 | COWL SET, L. MIDDLE | 64350-MEL-B30 | ZA | ZB | | | F-37-1 | 3 |
| 4 | COWL SET, L. UNDER | 64450-MEL-D20 | ZB | ZB | | 7M300407 | F-38-1 | 5 |
| 4 | COWL SET, L. UNDER | 64450-MEL-D21 | ZB | ZB | 7M300408 | | F-38-1 | 5 |
| 5 | COWL SET, R. MIDDLE | 64300-MEL-B30 | ZA | ZB | | | F-37-1 | 2 |
| 6 | COWL SET, R. UNDER | 64400-MEL-D20 | ZB | ZB | | 7M300407 | F-38-1 | 4 |
| 6 | COWL SET, R. UNDER | 64400-MEL-D21 | ZB | ZB | 7M300408 | | F-38-1 | 4 |
| 7 | COWL SET, RR. SEAT | 77210-MEL-D20 | - | ZB | | | F-19-1 | 2 |
| 8 | COWL SET, RR. SEAT | 77210-MEL-D30 | ZA | - | | | F-19-1 | 2 |
| 9 | COWL SET, UPPER | 64100-MEL-A30 | ZA | ZB | | | F-36-1 | 2 |
| 10 | FENDER COMP., FR. | 61100-MEL-D20 | ZA | ZC | | | F-9 | 1 |
| 11 | MARK, RR. SEAT COWL | 64841-MEL-D20 | - | ZB | | | F-40-7 | 11 |
| 12 | MARK, RR. SEAT COWL | 64841-MEL-D30 | ZA | - | | | F-40-7 | 11 |
| 13 | MARK, RR. SEAT COWL | 64842-MEL-D20 | - | ZB | | | F-40-7 | 12 |
| 14 | MARK, RR. SEAT COWL | 64842-MEL-D30 | ZA | - | | | F-40-7 | 12 |
| 15 | MARK, UNDER COWL | 64819-MEL-D20 | ZB | ZB | | | F-40-7 | 9 |
| 16 | MARK, UNDER COWL | 64825-MEL-D20 | ZB | ZB | | | F-40-7 | 10 |
| 17 | RAIL ASSY., SEAT | 50200-MEL-D20 | ZA | ZA | | | F-33 | 12 |
| 18 | SHELTER SET, TOP | 83150-MEL-D20 | - | ZD | | | F-16 | 5 |
| 19 | SHELTER SET, TOP | 83150-MEL-D30 | ZA | - | | | F-16 | 5 |
| 20 | STRIPE A, L. MIDDLE COWL | 64814-MEL-D20 | - | ZA | | | F-40-7 | 6 |
| 21 | STRIPE A, L. MIDDLE COWL | 64814-MEL-D30 | ZA | - | | | F-40-7 | 6 |
| 22 | STRIPE A, L. TOP SHELTER | 64852-MEL-D20 | - | ZA | | | F-40-7 | 14 |
| 23 | STRIPE A, L. TOP SHELTER | 64852-MEL-D30 | ZA | - | | | F-40-7 | 14 |
| 24 | STRIPE A, R. MIDDLE COWL | 64813-MEL-D20 | - | ZA | | | F-40-7 | 5 |
| 25 | STRIPE A, R. MIDDLE COWL | 64813-MEL-D30 | ZA | - | | | F-40-7 | 5 |

NOTE A:PART NO.CHANGE D:NEWLY PROVIDED E:PART NO.DELETION K:REQUIRED NO.CORRECTION L:APPLICATION SERIAL NO.CORRECTION
T:APPLICATION CORRECTION Z:REMARKS CHANGE

BOOKNo.:13MEL404

| Block No. | Ref. No. | Note | Part No. | Description | Reqd.QTY CBR1000RR 4 | 5 | 6 | 7 | Serial No. | Parts catalogue code |
|---|---|---|---|---|---|---|---|---|---|---|
| F-38-1 | | | LOWER COWL | (CBR1000RR6/7) | | | | | | |
| F-38-1 | 4 | | 64400-MEL-D20ZB | COWL SET, R. UNDER *TYPE2*(WL) | - | - | 1 | - | | |
| | | | | | - | - | - | 1 | ------- 7M300040 | KO |
| | | | | | - | - | - | 1 | ------- 7M300245 | U |
| | | | | | - | - | - | 1 | ------- 7M300395 | F |
| | | | | | - | - | - | 1 | ------- 7M300407 | BR,MX |
| | | | | | - | - | - | 1 | ------- 7M303457 | E,ED,EK |
| | | A | 64400-MEL-D21ZB | ..... | - | - | - | 1 | 7M300041 ------- | KO |
| | | | | | - | - | - | 1 | 7M300246 ------- | U |
| | | | | | - | - | - | 1 | 7M300396 ------- | F |
| | | | | | - | - | - | 1 | 7M300408 ------- | BR,MX |
| | | | | | - | - | - | 1 | 7M303458 ------- | E,ED,EK |
| | 5 | | 64450-MEL-D20ZB | COWL SET, L. UNDER *TYPE2*(WL) | - | - | 1 | - | | |

NOTE A:PART NO.CHANGE D:NEWLY PROVIDED E:PART NO.DELETION K:REQUIRED NO.CORRECTION L:APPLICATION SERIAL NO.CORRECTION
T:APPLICATION CORRECTION Z:REMARKS CHANGE

BOOKNo.:13MEL404

| Block No. | Ref. No. | Note | Part No. | Description | Reqd.QTY CBR1000RR 4 | 5 | 6 | 7 | Serial No. | Parts catalogue code |
|---|---|---|---|---|---|---|---|---|---|---|
| | | | | | - | - | - | 1 | ------- 7M300040 | KO |
| | | | | | - | - | - | 1 | ------- 7M300245 | U |
| | | | | | - | - | - | 1 | ------- 7M300395 | F |
| | | | | | - | - | - | 1 | ------- 7M300407 | BR, MX |
| | | | | | - | - | - | 1 | ------- 7M303457 | E, ED, EK |
| | | A | 64450-MEL-D21ZB | ..... | - | - | - | 1 | 7M300041 ------- | KO |
| | | | | | - | - | - | 1 | 7M300246 ------- | U |
| | | | | | - | - | - | 1 | 7M300396 ------- | F |
| | | | | | - | - | - | 1 | 7M300408 ------- | BR, MX |
| | | | | | - | - | - | 1 | 7M303458 ------- | E, ED, EK |
| | 11 | | 81257-GAZ-300 | INSULATOR, LUGGAGE BOX ..... | - | - | 4 | - | | |
| | | | | | - | - | - | 4 | ------- 7M300040 | KO |
| | | | | | - | - | - | 4 | ------- 7M300245 | U |
| | | | | | - | - | - | 4 | ------- 7M300395 | F, 2F |
| | | | | | - | - | - | 4 | ------- 7M300407 | BR, MX |
| | | | | | - | - | - | 4 | ------- 7M303457 | E, ED, EK, 2ED, 3E, 4EK |
| | | K | 81257-GAZ-300 | ..... | - | - | - | 2 | 7M300041 ------- | KO |
| | | | | | - | - | - | 2 | 7M300246 ------- | U |
| | | | | | - | - | - | 2 | 7M300396 ------- | F, 2F |
| | | | | | - | - | - | 2 | 7M300408 ------- | BR, MX |
| | | | | | - | - | - | 2 | 7M303458 ------- | E, ED, EK, 2ED, 3E, 4EK |
| | 18 | D | 64412-MEL-D30 | HEAT GUARD, UNDER COWL ..... | - | - | - | 2 | ------- ------- | 2BR, 2KO, 2MX, 2U, 3F, 5ED, 6E, 7EK |
| | | | | | - | - | - | 2 | 7M300041 ------- | KO |
| | | | | | - | - | - | 2 | 7M300246 ------- | U |

NOTE A:PART NO.CHANGE D:NEWLY PROVIDED E:PART NO.DELETION K:REQUIRED NO.CORRECTION L:APPLICATION SERIAL NO.CORRECTION
T:APPLICATION CORRECTION Z:REMARKS CHANGE

BOOKNo.:13MEL404

| Block No. | Ref. No. | Note | Part No. | Description | Reqd.QTY CBR1000RR 4 | 5 | 6 | 7 | Serial No. | | Parts catalogue code |
|---|---|---|---|---|---|---|---|---|---|---|---|
| | | | | | - | - | - | 2 | 7M300396 | -------- | F,2F |
| | | | | | - | - | - | 2 | 7M300408 | -------- | BR,MX |
| | | | | | - | - | - | 2 | 7M303458 | -------- | E,ED,EK,2ED,3E,4EK |

NOTE A:PART NO.CHANGE D:NEWLY PROVIDED E:PART NO.DELETION K:REQUIRED NO.CORRECTION L:APPLICATION SERIAL NO.CORRECTION
T:APPLICATION CORRECTION Z:REMARKS CHANGE